Howard A. Hanson Dam
Additional Water Storage Project

Section 902 Post Authorization Change Validation Study – Fish Passage
King County, Washington

APPENDIX B

ENGINEERING

PART 1 OF 2

Final Integrated Validation Report and

Supplemental Environmental Impact Statement

US Army Corps of Engineers
Seattle District

TACOMA POWER
TACOMA WATER
TACOMA RAIL
TACOMA PUBLIC UTILITIES

Engineering Appendix

Howard A Hanson Dam Additional Water Storage Project

Section 902 Post Authorization Change Validation Study - Fish Passage

April 2022

Prepared by

US Army Corps of Engineers®
Seattle District

This page intentionally left blank

TABLE OF CONTENTS

1. Introduction 1
1.1. Project Location/ Facility Description 1
1.2. Authority 6
1.3. Project History 7

2. Project Features 10
2.1. Existing Reservoir Operations 10
2.2. Existing Reservoir Debris Management 11
2.3. Log Booms 13
2.4. Full Facility Unwatering Stoplogs/Cofferdam 13
2.5. Trashracks 14
2.6. Multiport Collector 15
2.7. Horns 16
2.8. Modular Inclined Screens 17
2.9. Transition to Steep Slope 17
2.10. Primary Bypass 18
2.11. Full Flow Bypass 19
2.12. Tunnel 22
2.13. Outfall Stilling Basin 23
2.14. General Site 24
2.15. Excavation 24
2.16. Gantry Crane 25

3. Hydrologic & Hydraulic Design 26
3.1. H&H Design Summary 26
3.2. Design Criteria 26
3.3. Specific Design criteria: 27
3.4. Fish Collector 30
3.5. Flow Control 32
3.6. Steep Slope Bypass 32
3.7. Outfall 33
3.8. Hydrology 35
3.9. Hydraulic Modeling 36
3.10. CFD Modeling 37

4. Surveying, Mapping, and Geospatial Data 39
4.1. Coordinate System and Datums 39
4.2. LiDAR 39
4.3. Mapping 39

5. Geotechnical Design 40
5.1. Geotechnical Design Criteria 40
5.2. Regional and Site Geology 40
5.3. Explorations 46
5.4. Selection of preliminary design parameters 49
5.5. Recommended Instrumentation 50
5.6. Earthquake Studies 54
5.7. Foundation Design 58
5.8. Rock Cut Slope Stability 58

5.9. Outlet Tunnel Stability 59
5.10. Deceleration Tunnel Stability 63
5.11. Retaining & Subsurface Walls 69
5.12. Pavements 70
5.13. Excavatability Analysis 71
5.14. Construction Techniques 72
5.15. Re-use of Excavated Materials 73
5.16. Borrow and Disposal Sites 74
5.17. Concrete Sources 74
5.18. Future Explorations, Testing, and Analysis Required 74
5.19. References 74

6. Environmental and Biological Considerations 76
6.1. Environmental and Biological Design Criteria 76
6.2. Best Management Practices 76
6.3. Temporary Fish Passage 78
6.4. Biological Opinion Requirements 78
6.5. Monitoring and Evaluation 78
6.6. Pre-Construction of the HAHD FPF 78
6.7. Post-Construction of the HAHD FPF 79
6.8. Water Quality Consideration 79
6.9. References 79

7. Civil Design 80
7.1. Civil Design Features 80
7.2. Current Features 81
7.3. Real Estate 85
7.4. Relocations 85
7.5. Demolition 85
7.6. Utilities 85
7.7. Staging and Construction Access Roads 85
7.8. Stormwater 86

8. Structural Design 86
8.1. Structural Components 86
8.2. Functional Design Requirements and Technical Design Criteria 86
8.3. Intake Screens/Trashracks 87
8.4. Dewatering Bulkheads 89
8.5. Multiport collector with 5 fish horns 91
8.6. Full Flow Bypass Structure 91
8.7. Steep Slope Primary Bypass Flumes 92
8.8. Tunnel Lining 93
8.9. Concrete outfall structure and Stilling Basin 95
8.10. Primary bypass piping and outfall 95
8.11. Project Access for inspection and maintenance. 96
8.12. Structural Stability Analysis 99

9. Mechanical Design 99
9.1. Mechanical Design Criteria 99
9.2. Unwatering Bulkheads 101

9.3. Intake Crane ... 107
9.4. Modular Inclined Screen (MIS) ... 109
9.5. Primary Bypass ... 114
9.6. Primary Bypass Gates ... 118
9.7. Full Flow Bypass Gates ... 119
9.8. Watertight Access Doors and Hatches ... 121
9.9. Heating Ventilation and Air Conditioning ... 121
9.10. Facility Plumbing and Piping ... 122
9.11. Collector Structure Drainage and Unwatering ... 123
9.12. Tower Elevator ... 125
9.13. Fire Protection ... 125

10. Electrical Requirements ... 126
10.1. Electrical Design Criteria ... 126
10.2. Functional Design Requirements ... 126
10.3. Technical Design Criteria ... 126

11. Telecommunications Requirements ... 127
11.1. Telecommunication Design Criteria ... 127
11.2. Functional Design Requirements ... 127
11.3. Technical Design Criteria ... 127

12. Hazardous and Toxic Materials ... 127

13. Construction Procedures and Water Control Plan ... 128
13.1. Construction Sequence ... 128
13.2. Care and Diversion of Water ... 129
13.3. Dam/Reservoir Operations ... 130

14. Operation and Maintenance ... 130
14.1. Operation ... 130
14.2. O&M Responsibilities ... 131
14.3. Repair, Replacement and Rehabilitation (RR&R) Requirements ... 133

15. Risk Assessment ... 135

16. Cost Estimates ... 135

17. Schedule for Design and Construction ... 135

18. Plates, Figures, and Drawings ... 135

19. Use of Metric System Measurements ... 136

LIST OF FIGURES

Figure 1-1: Plan View of Fish Passage Facility ... 2
Figure 1-1: Sectional view of multiport collector ... 3
Figure 1-2: Sectional view of 5 steep slope primary bypasses ... 4
Figure 1-3: Sectional view of full flow bypass for horns 1, 3, and 5 ... 5
Figure 1-4: Sectional view of upstream side of deceleration tunnel. ... 6
Figure 1-5: Fish passage facility excavation ... 9
Figure 2-1: Daily reservoir elevations throughout the year from 2007-2020 ... 11

Figure 2-2: Log boom Locations 12
Figure 2-3: Debris collection by the log booms during a flood event 12
Figure 2-4: Log Boom Concept with Floating Anchor Assembly 13
Figure 2-5: Existing Cofferdam and stoplogs (left) 14
Figure 2-6: Trashrack screens installed on upstream face of intake. 15
Figure 2-7: Configuration and elevations of the multiport collector (with screens in various positions). . 16
Figure 2-8: One of the five horns (purple area). 16
Figure 2-9: MIS screen in neutral position. 17
Figure 2-10: Transition between the MIS and the U-shaped primary bypass. 18
Figure 2-11: Primary bypass from MIS (right) to deceleration channel (left). 19
Figure 2-12: Concept model- Isometric view 20
Figure 2-13: Concept model- Section view 21
Figure 2-14: Concept model- Section-Isometric view 21
Figure 2-15: Tunnel Concept model - Section-view 22
Figure 2-16. Deceleration Tunnel Alignment 23
Figure 2-17: Stilling basin geometry, supports, additional features 24
Figure 2-18: Excavation extents of the bypass structure. 25
Figure 2-19: Gantry crane on intake. 26
Figure 3-1: Historic Pool Data (2007 – 2020) 36
Figure 5-1: Regional geology. 41
Figure 5-2: Top of rock contour map showing historical river channels and proposed facility. 42
Figure 5-3: Mapped bedrock geology with proposed fish passage structure and outlet tunnel (USACE 1963) 43
Figure 5-4: Bedrock engineering properties (Table 1, USACE 1963) 43
Figure 5-5. Histogram and cumulative frequency of discontinuity spacing (S&W, 2020). 46
Figure 5-6: HAHD construction explorations 47
Figure 5-7. FPF construction explorations completed for 95% design 48
Figure 5-8: Instrumentation used to monitor existing structures. 52
Figure 5-9: Instrumentation used to monitor excavation stability. 52
Figure 5-10: Example excavation section showing instrumentation. 53
Figure 5-11: Extent of Cascadia Subduction Zone (Source: USGS Open File Report 2010-1149, Gray arrows indicate relative plate motion, block motion (circled numbers) is in mm/yr.) 54
Figure 5-12: Schematic cross-section through Cascadia subduction zone (Source: Silva, et al., 1998) 55
Figure 5-13: Location of fault sources near HAHD 55
Figure 5-14: Seismic Hazard Curve for PGA (Site Class B) 57
Figure 5-15: Probabilistic Seismic Hazard Deaggregation for PGA with 1/10,000 AEP (USGS 2014) 58
Figure 5-16: Example rock mass with outlet tunnel cross-section (Profile A) used in FLAC modeling. 60
Figure 5-17: Example FLAC model results at Profile A showing tension zones around the outlet tunnel. Rock pillar area is shown on the left figure. 61
Figure 5-18: Example sections showing drilled piles and grout holes for the rock pillar stabilization. 62

Figure 5-19: Excavation profile showing potential rock pillar area requiring stabilization. 63
Figure 5-20: Excavation section at 6+00 showing potential rock pillar area. 63
Figure 5-21. Histogram of RQD values. 65
Figure 5-22. Histogram of RMR values (assumed completely dry groundwater conditions and very favorable joint orientations) 65
Figure 5-23. Histogram of Q values [modified Q system - did not consider J_w (joint water reduction number) or SRF (stress reduction factor)] 66
Figure 5-24: Estimated tunnel support categories 67
Figure 5-25: Guidelines for excavation support (steel fiber reinforced shotcrete may be considered in place of wire mesh and shotcrete). 68
Figure 5-26. Outlet Tunnel geology and support (red=basalt, green=andesite, blue= pyroclastics, grey=felsite; steel sets shown along sections with black arrows) 68
Figure 7-1: General Site with access roads A, B, and C 81
Figure 7-2: Existing Downstream Storm Drain system 84
Figure 7-3: Plunge Pool Access 85
Figure 8-1: Typical Trashrack Section 88
Figure 8-2: Trashracks installed in existing cofferdam trashrack guide slots 88
Figure 8-3: Dewatering bulkhead isometric view 90
Figure 8-4: Tunnel Cross Section 93
Figure 8-5: Expected Rock Anchor configuration 94
Figure 8-6: Typical concrete pier support structure 96
Figure 8-7: Bridge Typical Plan 97
Figure 8-8: Typical Bridge Cross Section 98
Figure 8-9: Precast slab bridge over outlet stilling basin 98
Figure 9-1: Collector Unwatering Bulkhead 102
Figure 9-2: Unwatering Bulkhead Installed 103
Figure 9-3: Typical Unwatering Stoplog 104
Figure 9-4: Stoplog Storage Location Photo 106
Figure 9-5: Stoplog Storage Location Drawing 106
Figure 9-6: Intake Crane 107
Figure 9-7: Intake Gantry Crane Coverage Diagram 108
Figure 9-8: MIS Screen in a Penstock 109
Figure 9-9: MIS Screen in Backflush Position 111
Figure 9-10: MIS Screen in Primary Bypass Position 111
Figure 9-11: MIS Screen in Full Flow Bypass Position 111
Figure 9-12: MIS Screen Air Burst Manifold Layout 112
Figure 9-13: Primary Bypass Isometric 114
Figure 9-14: Primary Bypass Flume Sections 116
Figure 9-15: Lateral Flume Connection to Common Flume 117
Figure 9-16 118

Figure 9-17: Blue River Dam - Regulating Outlet Gate 120
Figure 9-18: Blue River Dam - Regulating Outlet Gates, section view 121
Figure 9-19: 95% Design Drain Schematic 124
Figure 9-20: 95% Design Pump Schedule 124

APPENDICES

B-1 Hydraulics
B-2 CFD Modeling
B-3 Geotechnical/Geology
B-4 Civil
B-5 Structural
B-6 Mechanical
B-7 Environmental Technologies (HTRW)
B-8 Risk Assessment
B-9 Drawings
B-10 2008 95% Design Documentation Report
B-11 2008 95% Drawing Set
B-12 2008 95% Geotechnical Baseline Report

ACRONYMS

ACE	Annual Chance of Exceedance	ID	Inner Diameter
ac-ft	Acre-feet	GMU	Game Management Unit
ADAS	Automated Data Acquisition	LFA	Low-Flow Augmentation
AEP	Annual Exceedance Probabilities	LWD	Large woody debris
APE	Area of Potential Effect	MDE	Maximum Design Earthquake
AWC	Attraction Water Conduit	M&I	Municipal and industrial
AWSP	Additional Water Storage Project	MIS	Modular Inclined Screen
BA	Biological assessment	MIT	Muckleshoot Indian Tribe
BiOp	Biological Opinion	NAAQS	National Ambient Air Quality Standards
BMP	Best management practice	NEHRP	National Earthquake Hazards Reduction Program
CAA	Clean Air Act	NEPA	National Environmental Policy Act
CB	Citizens' Band	NGVD	National Geodetic Vertical Datum
CE/ICA	Cost effectiveness and incremental cost analysis	NHPA	National Historic Preservation Act
CEQ	Council on Environmental Quality	NMFS	National Marine Fisheries Service
CFD	Computational Fluid Dynamics	NOAA	National Oceanic and Atmospheric Administration
CFR	Code of Federal Regulations	NPDES	National Pollutant Discharge Elimination System
cfs	Cubic feet per second	NRHP	National Register of Historic
CGR	Cougar Dam	NTU	Nephelometric turbidity units
Corps	U.S. Army Corps of Engineers	OD	Outer Diameter
COTS	Commercial Off the Shelf	O&M	Operations and maintenance
CSZ	Cascadia Subduction Zone	OMRR&R	Operations, maintenance, repair, replacement, and rehabilitation
CY	Cubic Yard	PA	Programmatic Agreement
CZMA	Coastal Zone Management Act	PED	Pre-construction, engineering, and design
DO	Dissolved oxygen	PGA	Peak horizontal ground
DOT	Department of Transportation	PSHA	Probabilistic Seismic Hazard
DDR	Design Documentation Report	PSI	Pounds per Square Inch
EAL	Environmentally Acceptable	RM	River Mile
Ecology	Washington State Department of Ecology	RMR	Rock Mass Rating
ECP	Environmental Condition of	ROD	Record of Decision
EFH	Essential Fish Habitat	RPA	Reasonable and prudent
EIS	Environmental Impact Statement	RPM	Reasonable and prudent measure
ER	Engineer Regulation	RQD	Rock Quality Designation
ESA	Endangered Species Act	SEIS	Supplemental Environmental Impact Statement
ESR	Excavation support ratio	SRF	Stress Reduction Factor
FCE	Fish collection efficiency	SRKW	Southern Resident killer whale
FCM	Fracture Critical Members	SWE	Snow water equivalent
FPF	Fish passage facility	SWPPP	Stormwater Pollution Prevention

ft/s	Feet per second	TPU	Tacoma Public Utilities
FWCA	Fish and Wildlife Coordination Act	TSP	Tentatively Selected Plan
GBR	Geotechnical Baseline Report	USACE	U.S. Army Corps of Engineers
GCM	Global Climate Models	USFS	U.S. Forest Service
GHG	Greenhouse gas emissions	USFWS	U.S. Fish and Wildlife Service
GMU	Game Management Unit	VR	Validation Report
GPD	Green Peter Dam	WDFW	Washington Department of Fish and Wildlife
GRFMC	Green River Flow Management	WRDA	Water Resources Development
HAHD	Howard A. Hanson Dam	WS	Water Surface
HDPE	High Density Polyethylene		

1. Introduction

1.1. Project Location/ Facility Description

Howard A Hanson Dam (HAHD) is in southeast King County on the Green River near Ravensdale, Washington. The dam is located at river mile (RM) 64.5 in Section 28, Township 21 North, Range 8 East, Willamette Meridian (**Error! Reference source not found.**). The headwaters of the Green River flow westward from the Cascade crest. Upstream from the reservoir, the river falls over steep, mountainous terrain, restricted by narrow valley walls from its headwaters on Blowout Mountain near Stampede Pass. The dam lies within the Tacoma Public Utilities (TPU) municipal watershed, a primary drinking water supply for the region, and access to much of the 221 square miles of watershed above HAHD is closed to the public. Except for the dam, there is no streamside development in the upper watershed. Aside from the TPU watershed, the rest of the area is under ownership of private timber companies, the Burlington Northern and Santa Fe Railway Company, the Washington State Department of Natural Resources, and the US Forest Service (USFS). USFS land is managed as part of the Mt. Baker-Snoqualmie National Forest.

From RM 64.5, the Green River flows west and north from the Cascade Mountains. Downstream of HAHD, the river runs through rural areas and state parks, then development increases as the Green River turns into the Duwamish River. At RM 11 it joins with the Black River to form the Duwamish River, which then empties into Elliott Bay in the Puget Sound. The river is often referred to as the Green/Duwamish River.

The overall purpose for the proposed action is to reassess one component of the Additional Water Storage Project (AWSP), namely the restoration of downstream fish passage past HAHD as authorized in WRDA 1999 as an ecosystem restoration component. The need for restored fish passage arises from the problem that disconnection and flow regime change have severely reduced the capacity of the watershed to produce salmon and steelhead. One of the specific factors is the disconnection of the portion of the watershed upstream from HAHD. Although an upstream adult fish passage facility has been constructed at the Tacoma Public Utilities' diversion dam, HAHD remains as a barrier to 45% of the entire basin and 90% of the habitat for coho salmon and steelhead of the Green River. The one remaining unconstructed component of the AWSP Phase I is the FPF. Reference the Final Integrated Validation Report and Supplemental Environmental Impact Statement (Main Report) for more background information on the history and authority of HAHD and fish passage.

The focus of this appendix is the engineering and design of the downstream fish passage facility at HAHD, as well as required civil site work, debris management, and required support equipment. All other components of Phase 1 of the project have been completed, and no changes to the components of Phase 2 are being proposed at this time.

HAHD is an earth-and-rock fill embankment, with the outlet works and a gated spillway in the left abutment. The HAHD project includes the earthen embankment dam, outlet works tower, outlet tower bridge, primary outlet tunnel, bypass tunnel, stilling basin, gated spillway, right abutment drainage tunnel, right abutment grout curtain, a seepage control blanket on the upstream face of the right abutment, a right abutment/embankment dewatering system, and the excavation for vertical construction of the FPF. The dam embankment is an earth-and-rock fill zoned structure with a 500-foot-long crest at an elevation of 1,228 feet, and a maximum height of 235 feet above the river and bedrock. Total length of the dam, including spillway and abutment

structures, is 675 feet. Outlet works include a 19-ft horseshoe tunnel at elevation 1035 ft, a 48-in bypass pipi that discharges into the stilling basin at the horseshoe tunnel, and a 36-in bypass pipe that exits on the right bank of the channel well downstream of the stilling basin.

The downstream fish passage facility is a multiport collector with a steep slope bypass through the left abutment of the dam. The facility consists of 5 major features – multiport collector, steep slope primary bypass, full flow bypass, deceleration tunnel, and outlet structure – along with several sub-features, all of which are described in the next chapter.

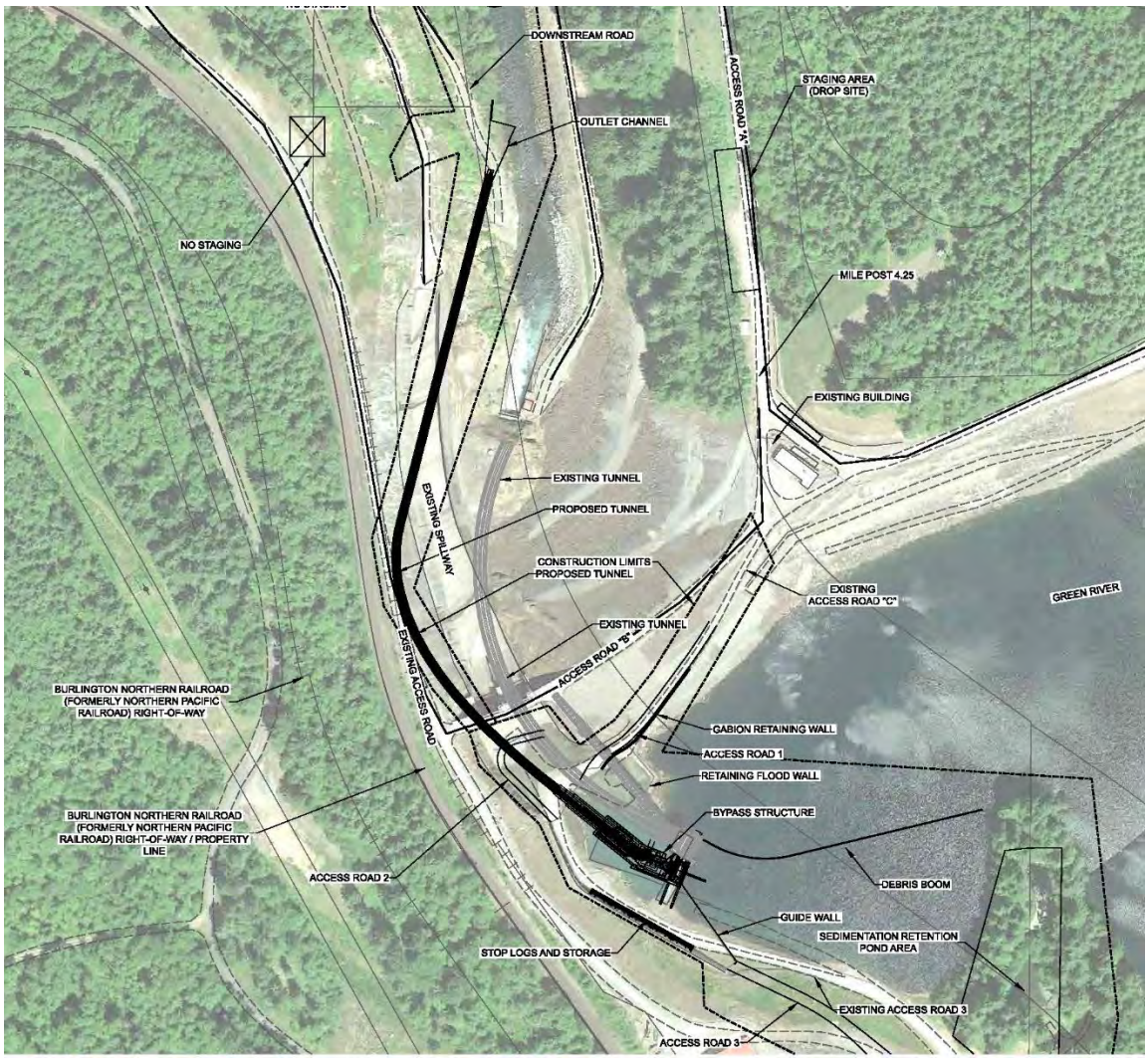

Figure 1-1: Plan View of Fish Passage Facility

The multiport collector consists of five horns stacked vertically on the upstream side of the dam to allow for collection of fish throughout the range of the typical reservoir fluctuations. In each of the horns there is a Modular Incline Screen (MIS), described in the next chapter, used to reduce flows going into the primary bypass with the fish. The collector structure remains similar to that used in the previous 2008 design. Figure 1-2 below shows a sectional view of the multiport collector with flow going from right to left and the screens oriented in various operational configurations.

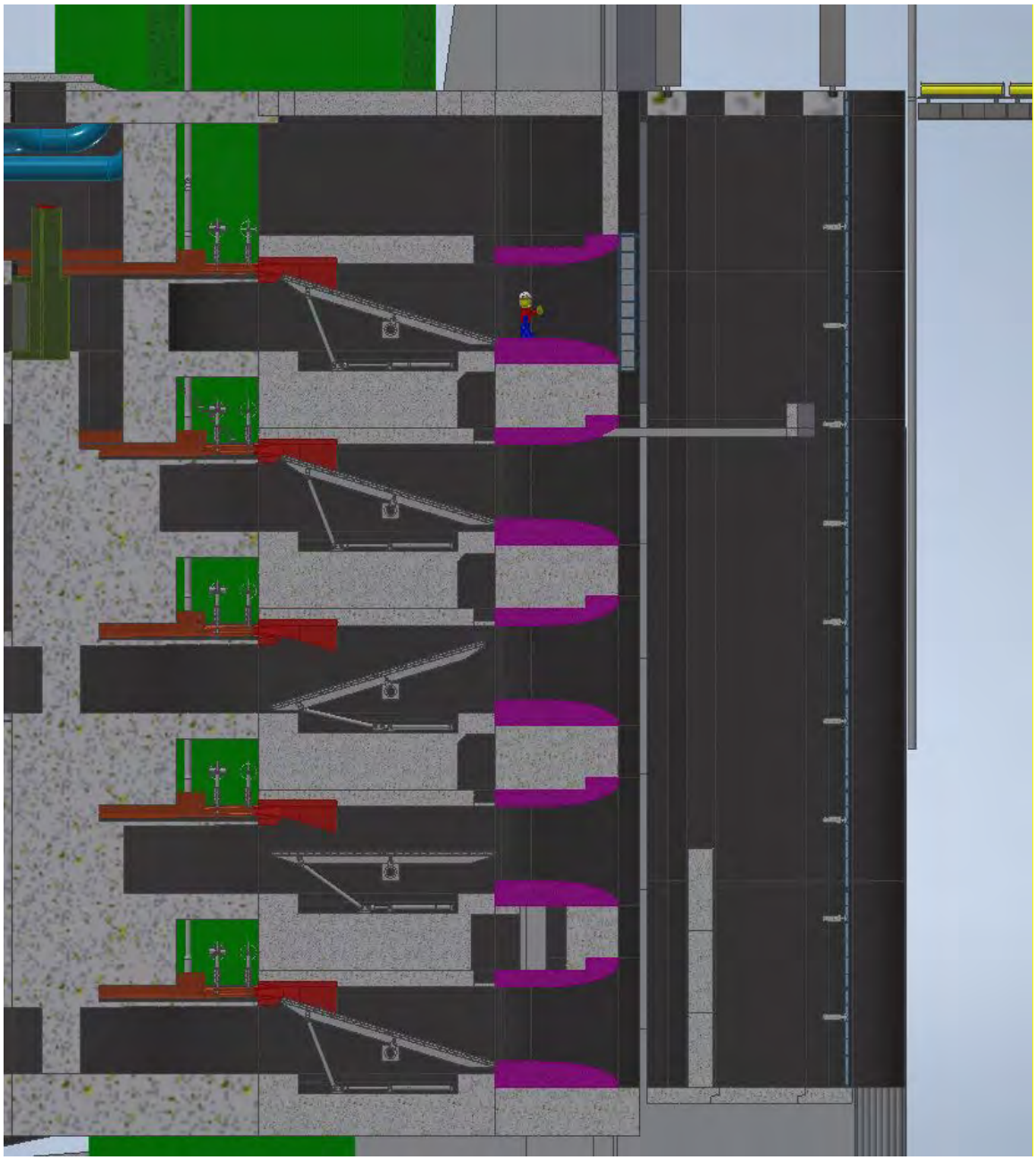

Figure 1-2: Sectional view of multiport collector

A steep slope bypass is a pipe or series of pipes used to convey fish and a small amount of flow from the fish collection locations on the upstream side of the dam to the base of the dam for release. At the HAHD facility, five flumes – one for each collector horn – convey fish from the collector through the dam and to the bottom of the steep slope bypass before merging into a U-shaped steel conduit at the deceleration tunnel. A transition segment is used to connect each of the horns into the U-shaped conduit. At the base of the conduit there is a large radius transition into the deceleration tunnel. Figure 1-3 shows a sectional view of the 5 primary bypasses.

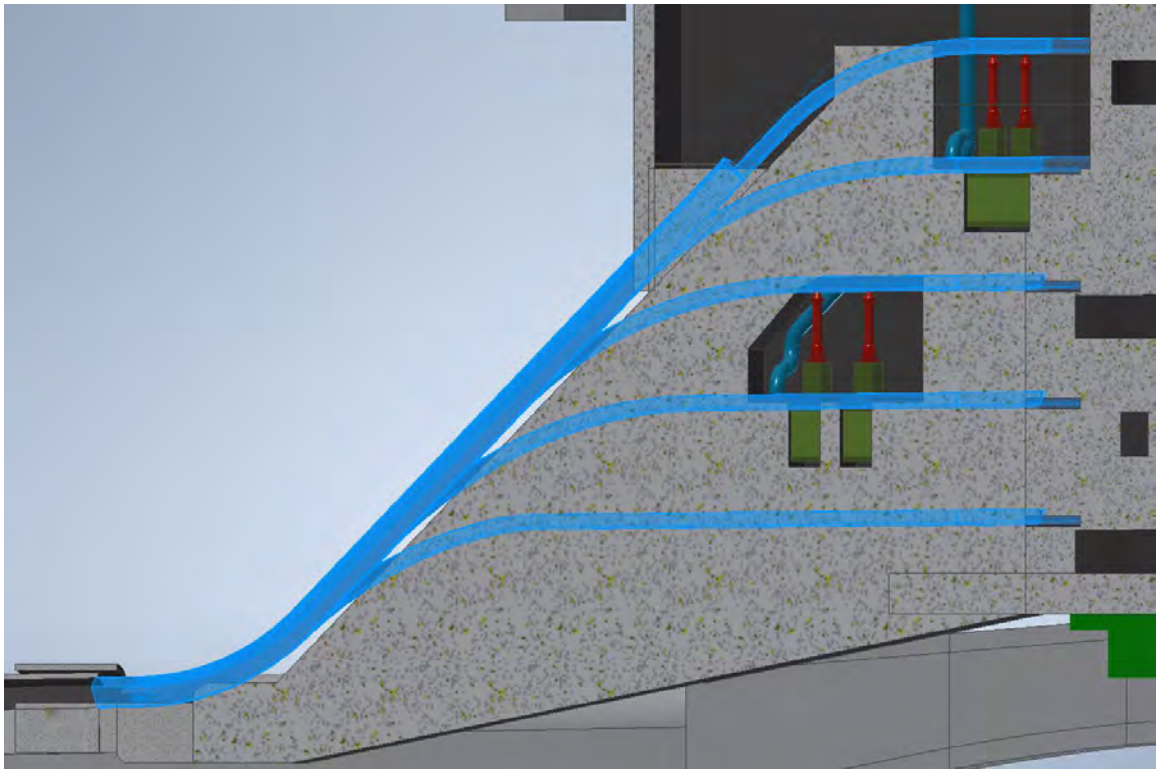

Figure 1-3: Sectional view of 5 steep slope primary bypasses

The full flow bypass conveys the water that is screened off through the MIS down to the deceleration tunnel. The full flow bypass is split into 2 conduits; horns 1, 3, and 5 merge to form the north side conduit (right side looking downstream) and horns 2 and 4 merge to form the south side conduit (left side). Each horn feeds a 4’ by 8’ rectangular concrete conduit that has a roughly flat transition section before dropping-at a 45-degree angle to the deceleration tunnel. Figure 1-4 shows a sectional view of the right side full flow bypass with conduits from horns 1, 3, and 5.

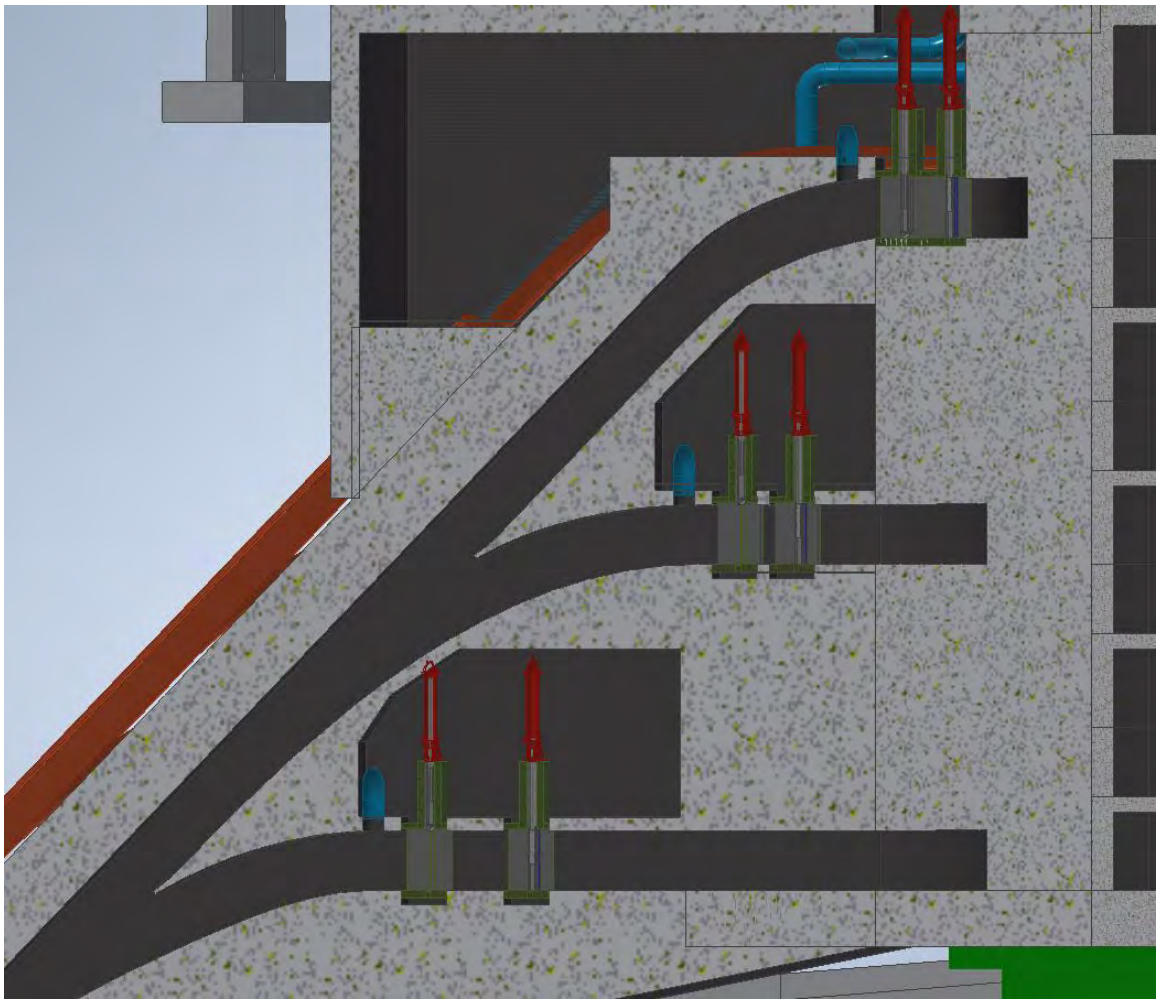

Figure 1-4: Sectional view of full flow bypass for horns 1, 3, and 5

The deceleration tunnel is a 15’ horseshoe tunnel that consists of 3 sections; 2 side-by-side sections on the bottom to convey the water from the full flow bypass and one triangular conduit in the top to convey the water and fish from the steep slope primary bypass. The tunnel runs approximately 1,200’ through the left abutment of the dam and exits the hillside approximately 100’ downstream of the existing stilling basin. Figure 1-5 shows a sectional view of the upstream portion of the deceleration tunnel.

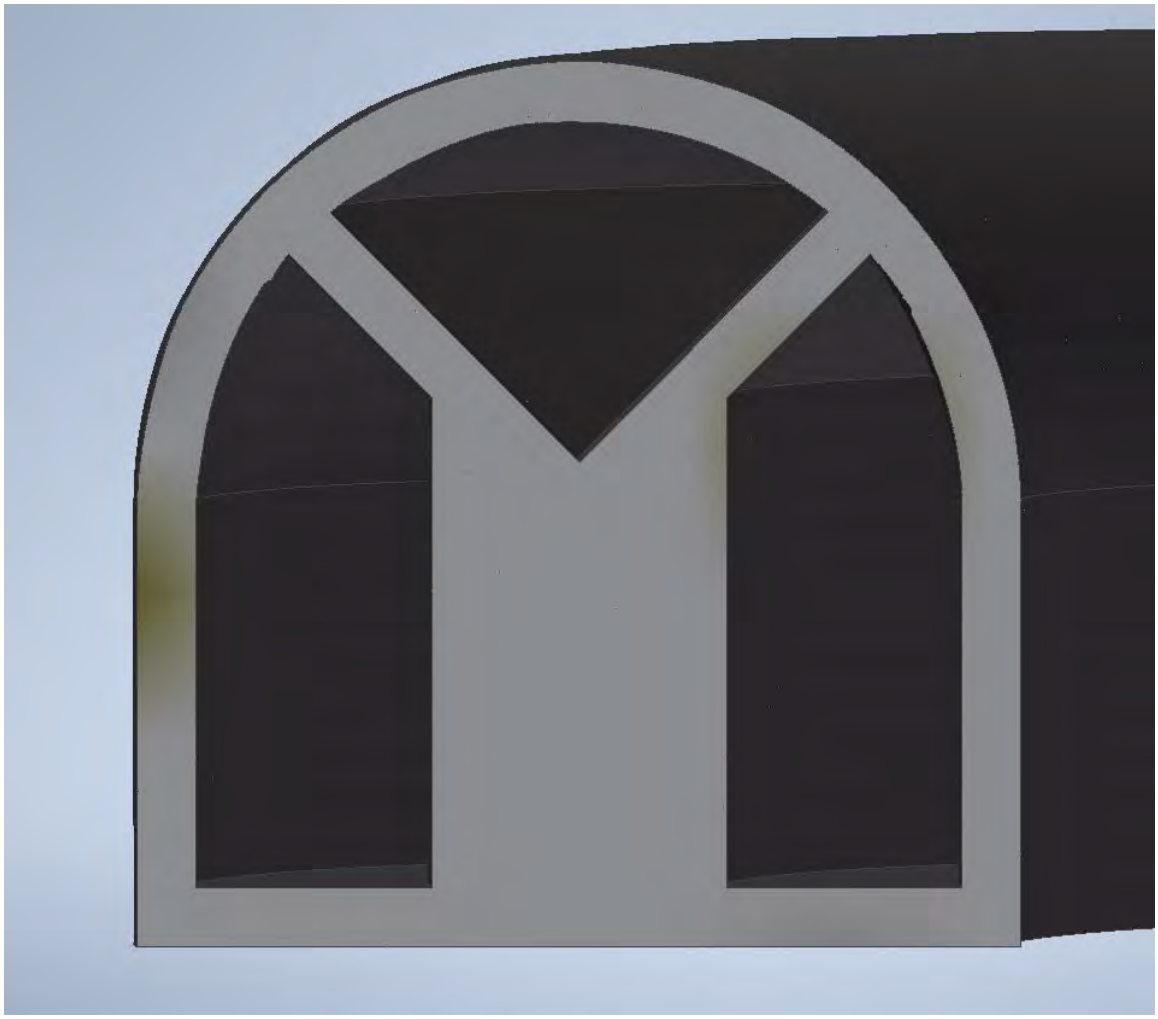

Figure 1-5: Sectional view of upstream side of deceleration tunnel.

Connected to the end of the tunnel is the outlet structure for the full flow bypass. This includes a stilling basin and scour pool for reintroducing the water from the full flow bypass into the river. The primary bypass with the fish extends ~200' downstream of the full flow stilling basin (~400' downstream of the end of the deceleration tunnel) through an elevated conduit to an exit into a plunge pool in the river.

Noticeably absent from the Feasibility Design is a fish handling feature. The trap and haul feature from the previous 95% design included fish sorting and handling capabilities. Since the updated Feasibility Design has moved toward volitional fish passage, the need for permanent sorting and handling has been eliminated. Temporary and intermittent capture will likely be needed to evaluate passage and survival metrics. The Adaptive Management and Monitoring Plan will cover plans for capture and handling.

Other facility and site features, such as debris management plans, access plans, geology assessment, etc., are included in the following chapters.

1.2. Authority

The authorization for HAHD, initially named the Eagle Gorge Dam, is in the River and Harbors Act of 1950 (Public Law 516, 81st Congress, 2nd Session, May 17, 1950). USACE completed construction of HAHD in 1962.

In 1997, approval was granted under Section 1135 of the 1986 Water Resources Development Act, as amended, for an ecosystem restoration project to increase the volume of summer conservation storage. The city of Tacoma was the local sponsor. The project included additional water storage of up to 5,000 acre-feet for use during the summer and fall months for downstream low-flow augmentation and a collection of ecosystem restoration actions around the reservoir.

The Additional Water Storage Project (AWSP) is a phased dual purpose water supply and ecosystem restoration project authorized by Section 101(b)(15) of the Water Resources Development Act (WRDA) of 1999 (Public Law 106-53) substantially in accordance with the plans, and subject to the conditions, recommended in a final report of the Chief of Engineers completed August 13, 1999.

King County and the State of Washington assumed cost-share responsibilities as local interests for the original construction of HAHD. Continuing operation and maintenance of HAHD is 100 percent federally funded. As indicated previously, the original authorized and implemented project purposes were flood control and fish conservation, and USACE determined that the fish conservation purpose was best implemented by storing water in the spring for the purpose of augmenting stream flows during the summer and fall low-flow season.

Ecosystem restoration and water supply were added as project authorities with the AWSP. Subsequent to enactment of the legislative authority, certain elements of the AWSP, including the downstream fish passage facility, were redesignated from cost-shared ecosystem restoration project elements to predominantly Federal-funded project elements to ameliorate the ostensible effects -- reflected in the 2000 National Marine Fisheries Service (NMFS) Biological Opinions (BiOps) supporting initial project authorization -- on Endangered Species Act (ESA)-listed species and critical habitat. See the Main Report for details on Project Authority, the BiOp, and the AWSP.

1.3. Project History

The HAHD, initially named the Eagle Gorge Dam (until 1958), was completed in 1962. The project was authorized to provide flood control, fish conservation, irrigation, and municipal and industrial (M&I) water supply. USACE determined at the time of project implementation that the fish conservation purpose was best implemented by storing water in the spring for the purpose of augmenting stream flows during the summer and fall low flow season. The irrigation and water supply portions of the authorization were deferred and not implemented at the time of construction.

When HAHD was constructed, there had been no runs of anadromous fish extending above TPU’s diversion dam since the latter’s construction in 1912; therefore, no provisions for fish passage were built into HAHD. The HAHD continued that isolation of over 106 miles of high-quality river and stream habitat and further blocked the downstream flow of sediment and organic inputs to the lower river. Juvenile hatchery winter steelhead, coho, and fall Chinook salmon were released in the Upper Green River watershed above the dam in multiple increments in the 1980s and 1990s; however, releases of these fish species ceased in the early 2000s. Out-migrating juvenile fish from these watershed releases had to traverse the slack water reservoir and locate the deep-water outlets at HAHD to exit the project. Survival of these juvenile fish has been poor due to the hardships of migrating through unnatural conditions.

In 1989, USACE began to investigate the potential for the HAHD project to help meet Municipal and Industrial (M&I) water supply needs of the Puget Sound area. In 1994, the scope of the study was expanded to include ecosystem restoration. USACE evaluated multiple reservoir storage alternatives with options for downstream juvenile fish passage

and other ecosystem restoration features. USACE completed a Final Feasibility Study Report and EIS in 1998 and recommended a dual-purpose water supply/restoration project implemented in phases. The AWSP was authorized in WRDA 1999.

The plan recommended in 1998 and authorized in 1999 consists of a dual-purpose phased plan, which would modify HAHD by changing the reservoir operation to allow for raising the level of the reservoir conservation pool for additional water storage and ecosystem restoration. The recommended plan includes two phases:

- Phase I: Storage of 20,000 acre-feet (ac-ft) for M&I water supply
- Phase II: Additional storage of 2,400 ac-ft for M&I water supply and 9,600 ac-ft for low-flow augmentation (LFA). Phase II in an operational modification that does not require additional construction.

Phase I has been implemented and raised the conservation pool elevation from 1,147 feet to 1,167 feet in 2007. However, the fish passage facility (FPF) included in the Phase I recommendation has not been constructed. Implementation of Phase II is dependent upon the evaluation of the success of Phase I and consensus of the State and Federal resources agencies, the Muckleshoot Indian Tribe (MIT), TPU, and USACE. If Phase II were implemented, there would be additional mitigation features associated with raising the pool to elevation 1,177 feet. Additional information about implementation of the AWSP Phase I and II appears in chapter 6 of the EIS (USACE 1998).

Most of the components described in the 1998 EIS for the AWSP have been constructed including the new administration building and maintenance facility, upgraded seawall at the boat launch site, and the powerline upgrade to support the infrastructure. The completed components include significant ecosystem restoration measures including extensive river and stream habitat projects above the dam and re-establishing downstream movement of gravel and large wood below the dam. To initiate a principal part of the mitigation for the AWSP, engineering design and construction of a downstream FPF began in 2003.

Construction of the FPF completed to date includes installation of a cofferdam for building in the dry and excavation of the space for the fish collection structure, which is an area approximately 60 feet wide by 180 feet long and approximately 100 feet deep (Figure 1-5**Error! Reference source not found.**). Rock anchors, shotcrete, and drains were installed to stabilize the excavation walls. A soldier pile wall with tieback anchors and permanent concrete facing was used to retain soil along the south side of the FPF excavation. Contractors were able to complete construction of the cofferdam on the left bank of the river just upstream of and connected to HAHD. This cofferdam would serve to separate the construction site from the reservoir during construction of the FPF. Additionally, the cofferdam serves as part of the entrance structure for the permanent facility, utilizing the stoplogs to isolate the facility during maintenance periods

As the excavation for the FPF was underway, USACE continued the design process for the vertical structure portion of the action. This work achieved a 95% level of design for a multiport collector, which has been mostly adopted for this current Feasibility Phase design. During this detailed design phase, USACE also produced a new cost estimate for this facility, which revealed the likelihood of insufficient funding.

Construction of the FPF was suspended in 2011 due to an anticipated Section 902 cost limit exceedance; all construction was halted, and the cofferdam has remained in place. Continuing activities on-site include monitoring to ensure excavation and critical dam structure stability. Automated instrumentation (extensometers, crack meters, piezometers, load cells, liquid level sensors) collect daily readings, and manual surveys

of inclinometers and inspections of the slopes of the excavation are performed twice yearly.

Figure 1-6: Fish passage facility excavation

Upstream passage of adult salmon and steelhead around the TPU diversion dam and HAHD is the responsibility of TPU. The upstream fish collection and passage (trap and haul) facility built for collecting and transporting adult salmon and steelhead was one of several measures that TPU committed to as part of its Habitat Conservation Plan (Measure 1-03), arising out of Tacoma's municipal water supply operations on the Green River (TPU 2001). The upstream trap and haul facility was completed in 2005 at the diversion dam at RM 61. The trap-and-haul facilitates collection of migratory fish by using a fish ladder at the diversion dam, collecting and placing fish in tanker trucks and transporting them upstream to be released above HAHD. Limited operation of the trap-and-haul facility for testing purposes was initiated soon after completion, including the transport of 1,419 pink salmon above HAHD in 2007 and 72 coho salmon released above HAHD in 2008. The purpose of the latter release was to study fish migration through the reservoir to help determine appropriate future release locations. The release point for adult fish to be transported above the dam is uncertain at this time. Several tributaries feed the reservoir, including the North Fork Green River, Gale Creek, and Charley Creek. Consequently, there is a desire to maximize use of all available habitat by releasing adult fish at the downstream end of the reservoir as opposed to the mainstem Green River upstream of the reservoir to allow the fish to have access to all of the tributaries. This may have some effect on the number of adult fish that 'fall back' after release and are collected at the FPF at HAHD. Decisions on operations for the adult fish facility including when the facility will begin operation for adult fish releases upstream of HAHD will be made in conjunction with WDFW and MIT and implemented by TPU.

After receiving the February 2019 jeopardy Biological Opinion (BiOp) from NMFS, USACE has initiated implementation of Reasonable and Prudent Alternative (RPA) 2 of 9

the BiOp (see the Main Report for background on the BiOp). This action is a requirement to be implemented in the interim period between the issuance of the BiOp and the completion of downstream fish passage. The action is a change to operations between October 15 and February 28 each year such that USACE will conduct flow management operations that reduce outflow rates at the dam to a maximum of 5,000 cubic feet per second (cfs) during most instances of moderately high inflow events. The purpose is to reduce flows that scour and displace Chinook salmon redds (i.e., salmon egg nests in river gravel) to improve survival during the egg to migrant lifestage.

2. Project Features

2.1. Existing Reservoir Operations

Howard A. Hanson Dam project is regulated primarily to provide flood risk management to the valley downstream of the Auburn gage, including the communities of Auburn, Kent, and Tukwila. Conservation storage is released during the summer and fall months to augment low flows for fishery enhancement and for water supply purposes. Regulation for flood risk management and conservation has historically been non-conflicting because each is applicable to separate seasons. Generally, the reservoir will be held near or below elevation 1,075 ft NGVD29 during the November through late February flood season, except during periods of actual flood regulation or prolonged dry weather requiring conservation storage after 1 November. As the potential for floods diminishes in the late winter and spring, the reservoir will be filled to elevation 1,167 ft to fulfill the AWSP Phase I needs.

The fish passage facility is designed to provide downstream fish passage when reservoir elevations are above 1080 ft between February 1 and November 15. The actual periods of operation for fish passage will be confirmed through additional study. While in flood season the reservoir may be below 1080 ft, in which case it is assumed fish passage will occur successfully through the existing 19 ft horseshoe tunnel. This will be confirmed through additional study. There are two scenarios where fish passage is not likely to occur, 1) during the flood season when the fish facility is offline even though high flows push the reservoir above 1080 ft, and 2) during the fish passage season when the fish facility is online and inflow is greater than 4,000 cfs. A 4,000 cfs inflow is a critical threshold that marks a transition from fish facility operation to flood risk management operation that may occur during the early spring. There is potential to investigate reservoir operations during design phase to optimize successful fish passage while meeting existing authorization and mission. Below are the maximum, average, and minimum daily reservoir elevations from 2007-2020. The increase in “full pool” from elevation 1,147 to 1,167 first occurred in 2007. The “full pool” is expected to increase again to elevation 1,177, as described in Section 1.3, but the timing is unknown. The previous 95% design accounted for this eventual pool raise in its determination of the most effective elevations of the five collector horns.

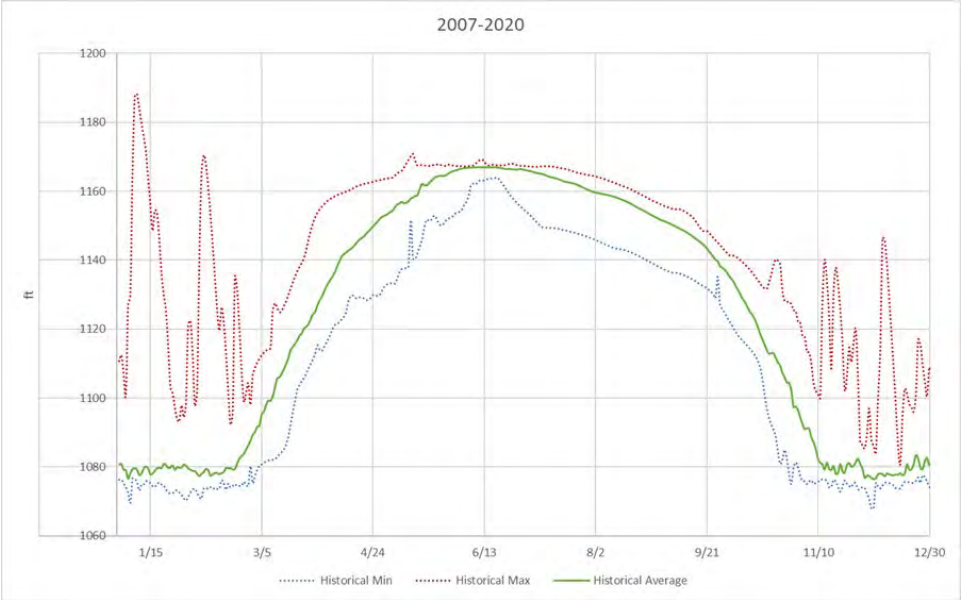

Figure 2-1: Daily reservoir elevations throughout the year from 2007-2020

2.2. Existing Reservoir Debris Management

Large flood events can produce a significant amount of debris at the dam. Additionally, the pool refill period in the springtime can also mobilize smaller debris from the banks. The physical features included in the current debris management system is four log booms and a trash rack upstream of the intake to the 19-ft tunnel. Two booms are typically used for operations, one in the immediate forebay and one that extends from the boat dock across the reservoir to approximately the five mile marker on the adjacent access road. There are 2 more booms that can be pulled into place during major flood events, the booms are spaced about 25 yards apart and extend from the approximate 5 mile mark on the adjacent access road directly across the narrow section of the reservoir, see figure 2-2. The booms are strategically placed at the different locations in the forebay. They consist of foam-filled steel pipe connected by 18” of grade 100 chain to form a collection line that spans the reservoir. See Figure 2-3 below for a view of debris collection by the log boom during a moderate flood event. Project staff use “log bronc” boats after flood events to tug debris collected at the log booms up reservoir to a holding area until they can manage it in the summer. A minimal amount of surface debris gets past the log booms and is pushed against the trash rack.

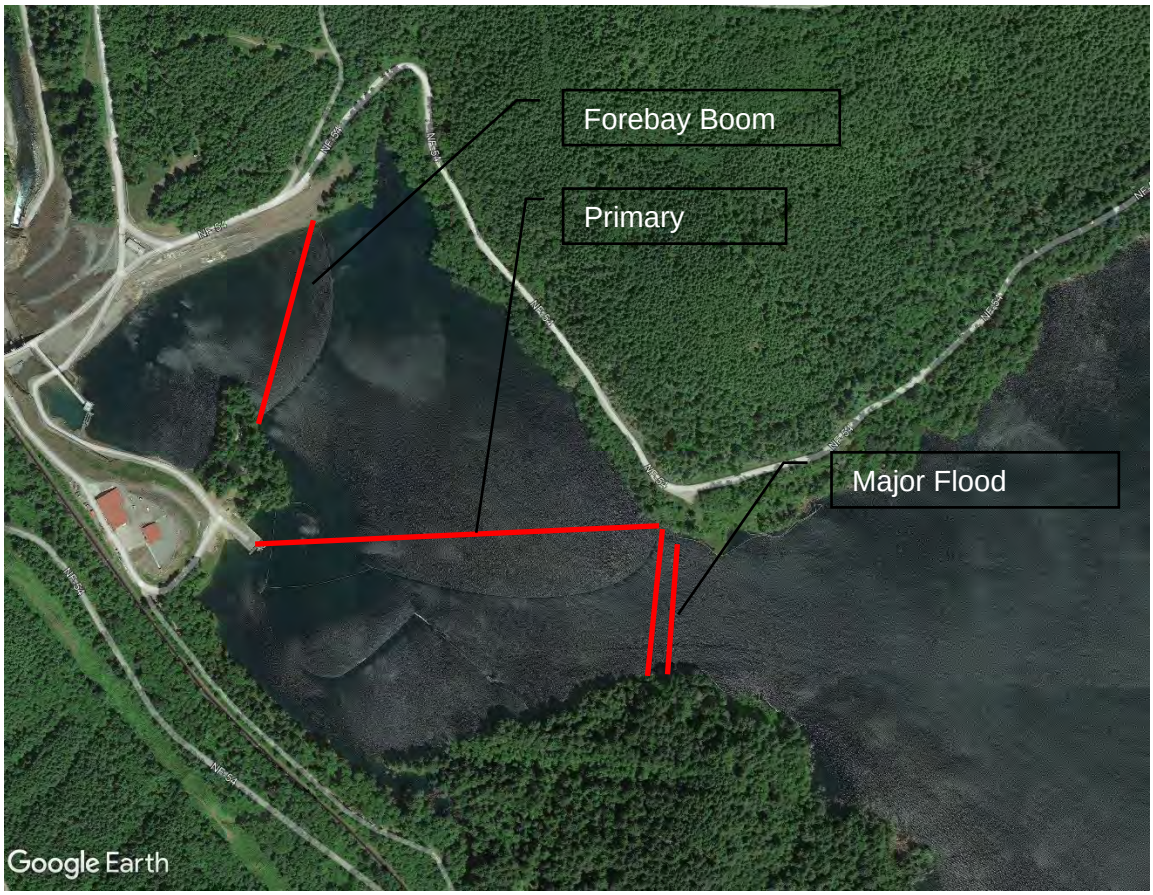

Figure 2-2: Log boom Locations

Figure 2-3: Debris collection by the log booms during a flood event

2.3. Log Booms

There may be a need to modify or replace the existing log boom system based on additional evaluation in the design phase. If pursued, the replacement will be designed to protect the multiport structure. A boom would likely be a single 24” HDPE log boom spanning over 500 feet and located in a similar location to the existing boom structure. The log boom will feature a floating anchor assembly such that it can span the bay during large reservoir fluctuations, or it will have the ability to lay down along the shoreline if configured. See Figure 2-4 for a conceptual design of a new log boom. The log boom will feature galvanized steel debris screens to capture smaller debris that could have trouble passing through the steep slope bypass pipe. In discussion with boom manufacturers, laydown on riprap precludes the use of debris screens. Screen use would be restricted to the portions of the boom that are continuously floating. The screens, or curtains, could potentially be a modification to the existing log boom nearest the dam.

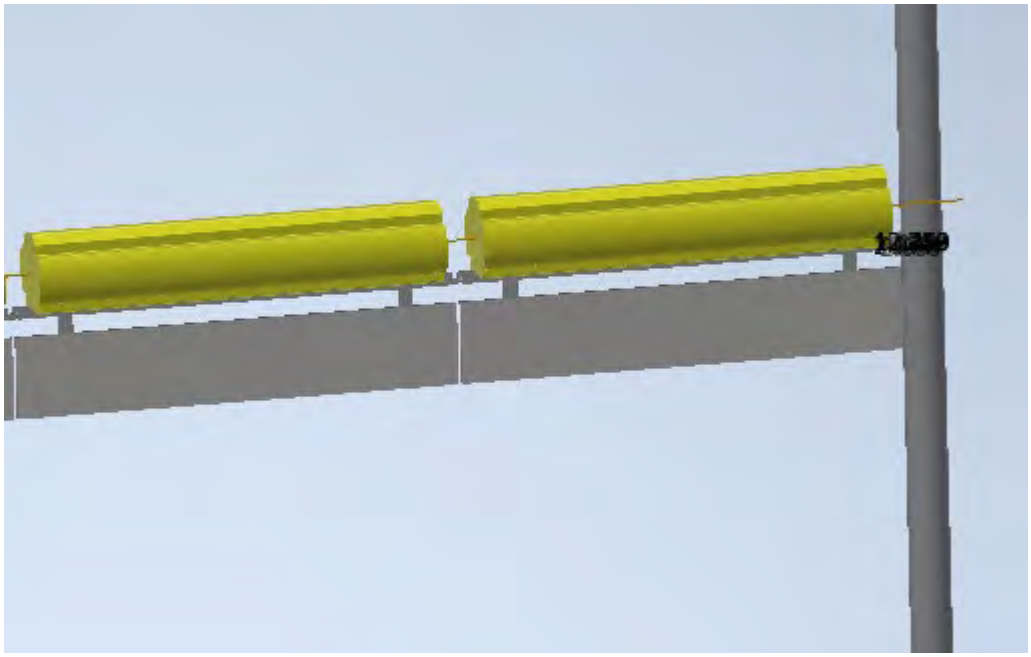

Figure 2-4: Log Boom Concept with Floating Anchor Assembly

2.4. Full Facility Unwatering Stoplogs/Cofferdam

During the previous construction efforts, the cofferdam for construction of the facility was completed. The structure was designed to isolate the facility from the reservoir up to an elevation of 1167’ which corresponds to the water surface of the summer conservation pool elevation. The structure was also designed to be a permanent feature of the facility, acting to fully isolate the facility from the reservoir for maintenance or emergencies. The structure contains a set of 11 stoplogs that can be removed/placed as necessary to operate the facility.

The current condition of the full facility unwatering stoplogs is uncertain and will require inspection prior to dewatering the excavation. It is known that the stoplogs were forced into place during previous efforts and will likely need to be removed in a destructive manner. Also, the last time the excavation was unwatered the stoplogs had several leaks that will need to be managed during construction. The stoplogs were initially installed in the 2003-2008 timeframe, and did not fit well. In order to install them, the

stoplog above was dropped "like a hammer" until the stoplog set in place. It is expected that after 20+ years in this condition that the stoplogs will only be removeable by demolishing them. It is anticipated that the stoplogs will need to be replaced for operations of the facility to ensure safe dewatering and the required design life.

Figure 2-5: Existing Cofferdam and stoplogs (left).

2.5. Trashracks

The trashracks are another component of the debris management system. They are design to prevent large debris from entering the multiport collector and clogging the small passages of the primary and full flow bypass. Log Booms are ineffective at capturing larger neutrally buoyant debris, requiring the trash rack to capture that material. The goal of the trashrack system is to minimize the potential for fish and debris collision.

The trashrack consists of horizontal bars spaced at 24” on center with vertical bars spaced at 10” on center for the 12’-0” open span between vertical support columns. Trashracks will be cleaned with a crane by a trash dipping operation as described in section 9. The crane would be used to clear debris using a clamshell attachment. The clamshell would load debris directly into a bin placed on the deck that in turn, can be picked up by a hook arm truck and transported to the designated disposal area. Allowance for a future separate guided raking system is desirable to ensure trash racks are not damaged during raking activities. Trash racks are removable for repairs as necessary to ensure the required design life.

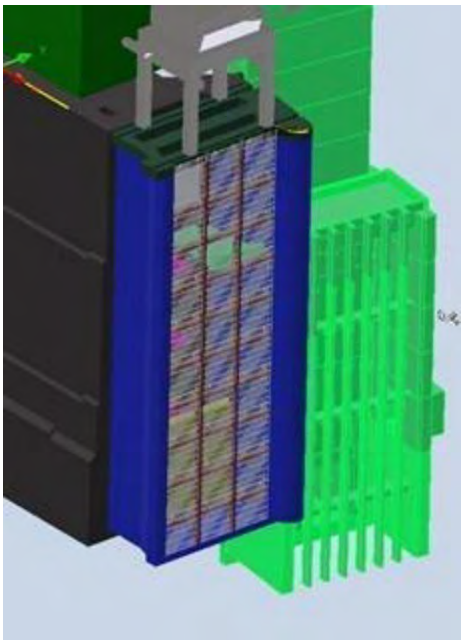

Figure 2-6: Trashrack screens installed on upstream face of intake.

2.6. Multiport Collector

The multiport collector consists of 5 horns stacked vertically on the forebay side of the dam to allow for collection of fish over the reservoir water surface elevation range of elevation 1080 ft to 1177 ft. The bell-shaped collectors are 9 ft tall and 11ft wide. The invert of Horns 1 (lowest) and 5 (highest) are elevations 1063 ft and 1151ft. respectively. The facility may be offline when the reservoir elevation is below 1080 ft due to the potential to recruit debris from the surface. Further evaluation of surface collection will be completed in the design phase, but in the event of a pool below 1080 ft the existing outlet tunnel (invert elevation 1035 ft) will be used to pass fish. In each of the horns there is an MIS used to reduce flows going into the primary bypass with the fish. The facility utilizes an attraction flow range from 233 cfs to 1,200 cfs; any flow greater than 600 cfs requires simultaneous operation of two horns, with the lower horn having a minimum discharge of 300 cfs and the upper horn having a maximum discharge of 600 cfs. The collector structure, shown in Figure 2-7 below, remains similar to that used in the previous 2008 design.

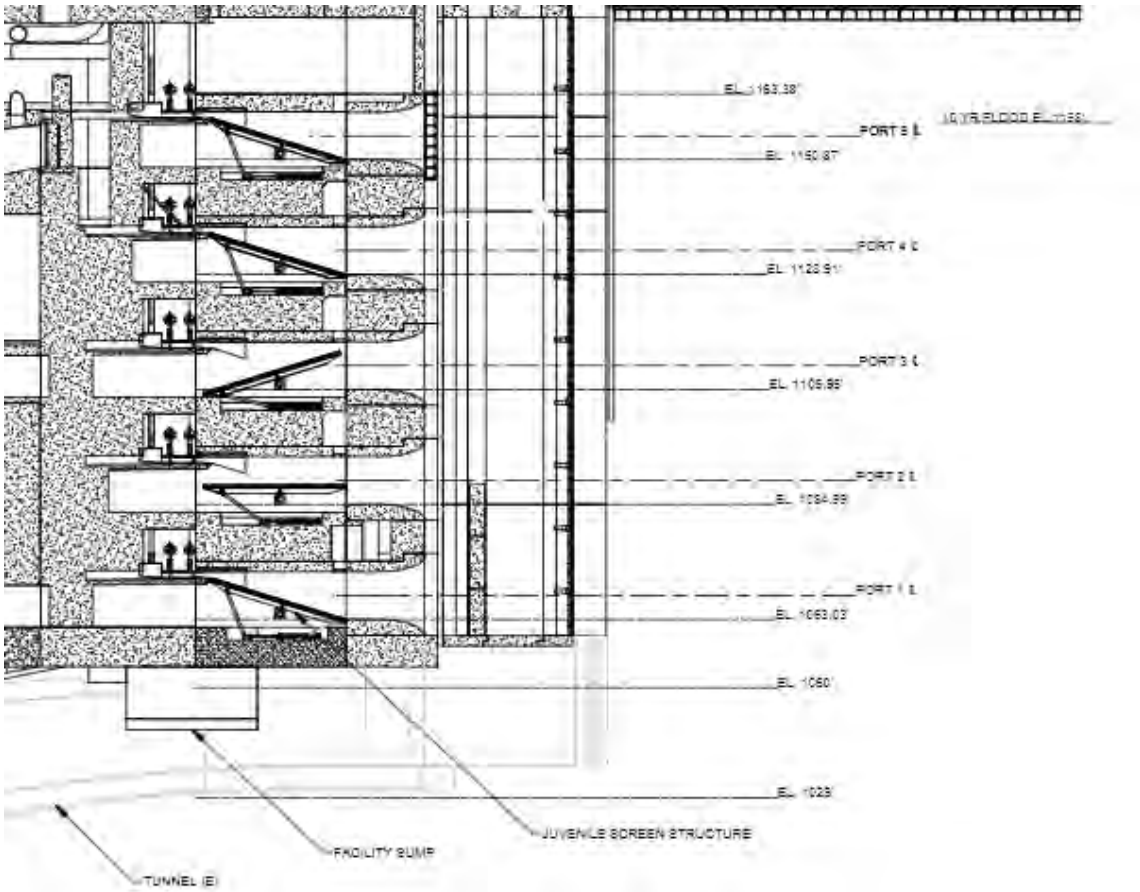

Figure 2-7: Configuration and elevations of the multiport collector (with screens in various positions).

2.7. Horns

The contracting collector entrance between the screen enclosure and the operating bulkheads is called the ‘collector horn.’ The horn is 16 feet long and is designed to provide for a constant rate of change of mean velocity of no more than 0.3 ft/sec/ft at a discharge of 600 cfs (i.e., dV/dx = 0.3 ft/s/ft, per criterion). Previous design efforts determined that the average velocity at the entrance of the horn be 2 fps at 600 cfs per collector, with average velocity at the downstream end of the horn (upstream end of the inclined screen enclosure and screen) being 6 fps, which is considered capture velocity for the species of interest. See Section 3.2 for further reference to hydraulic criteria.

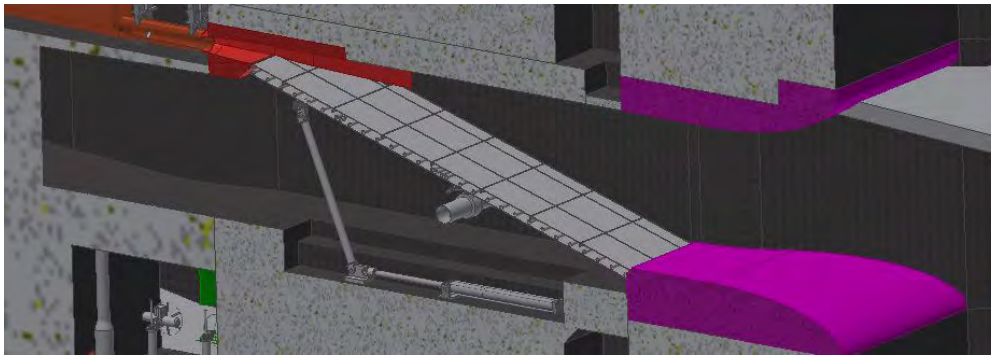

Figure 2-8: One of the five horns (purple area).

2.8. Modular Inclined Screens

The MIS exist in each of the five collector horns and are intended to guide fish up into the primary bypass. They have a rectangular shape (11' x 27') and are placed diagonally in the conduit at an angle of 17 degrees. Downstream migrating fish will encounter the screen and be guided toward the bypass along with a small portion of the flow. The remainder of the flow will pass through the screen and into the full flow bypass system. There are two systems present that can facilitate shedding debris that accumulates on the face of the screen. The primary system is a hydraulic cylinder that rotates the screen approximately 34 degrees about the center of the screen. This elevates the leading edge so that flow backflushes the screen carrying debris down the full flow bypass. The second system is a series of air burst pipes that exist between the face of the screen and the porosity plates. This system of 4 stations connect to piping within the facility that creates a mass of bubbles that raise up through the screen to carry debris out through the primary bypass system. The screen is fabricated from stainless steel and weighs approximately 15 kips. The framing system is designed to support a hydrostatic load of 10 feet of head. This system is supported from a central pivot connected to sockets recessed in the collector horn walls. See the discussion in Chapter 9 for more information.

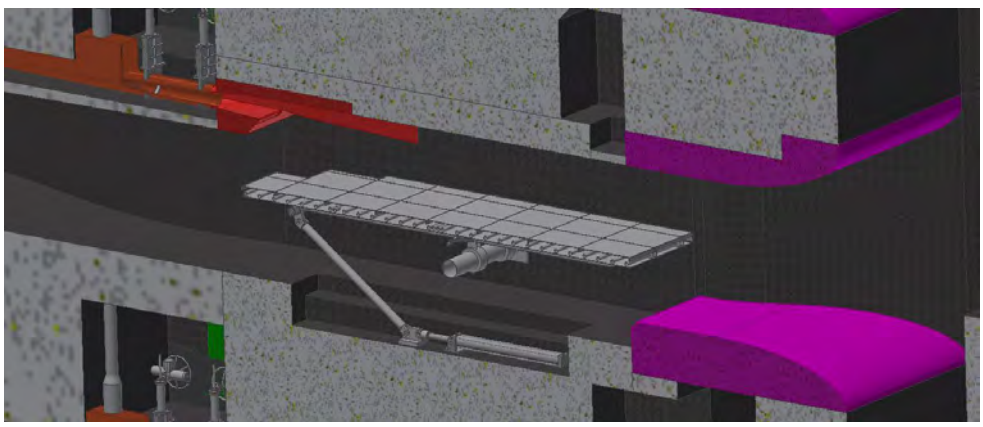

Figure 2-9: MIS screen in neutral position.

2.9. Transition to Steep Slope

The transition between the downstream extent of the MIS screen and the U-shaped primary steep slope bypass is meant to gradually progress from pressurized to free-surface flow, moving from a rectangular cross section of relatively high pressure to a 16" outer diameter (OD) pipe geometry with an atmospheric outlet pressure. The upstream rectangular cross section is 3-ft x 1.25-ft at the downstream extent of the screen, and transitions to a 16-in OD (15.25-in inner diameter (ID)) pipe over a 3.5-ft distance. See Figure 2-10 below of Sheet G-109 for more details.

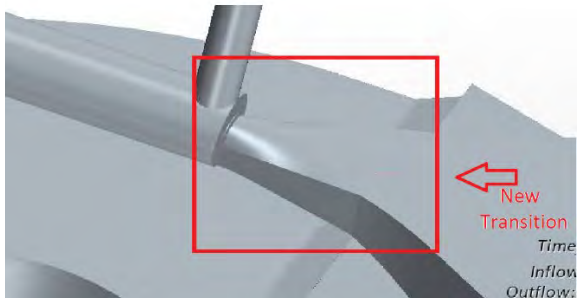

Figure 2-10: Transition between the MIS and the U-shaped primary bypass.

2.10. Primary Bypass

The primary bypass system is a series of stainless steel conduits that are embedded in concrete which serve to transport fish from the collector horn downstream to the outfall location. There is one lateral flume for each of the five collector horns. Each of these lateral flumes merge into a large junction flume which extends down on a 1-to-1 slope until it turns to flatten out and join with the top chamber of the deceleration tunnel. The lateral flumes transition tangent into the junction flume along an 80-foot radius. The junction of these flumes will consist of a complex metal fabrication joining the two. The lateral flumes are approximately 36 inches tall with a U-shaped bottom 16 inches in diameter fabricated from 3/8” stainless steel plate. There are approximately 674 feet combined of lateral flume required. The junction flume is a V-shaped flume approximately 8.5 feet across at the top and 4.6 feet deep. This flume is also fabricated from 3/8” stainless steel plate and is approximately 162 feet long. Each bypass has both primary and emergency closure knife gates at the upstream end, but the gates are not intended to throttle flow through the primary bypass. They are operated in either the full open or full closed position. See additional discussion in Chapter 9 below.

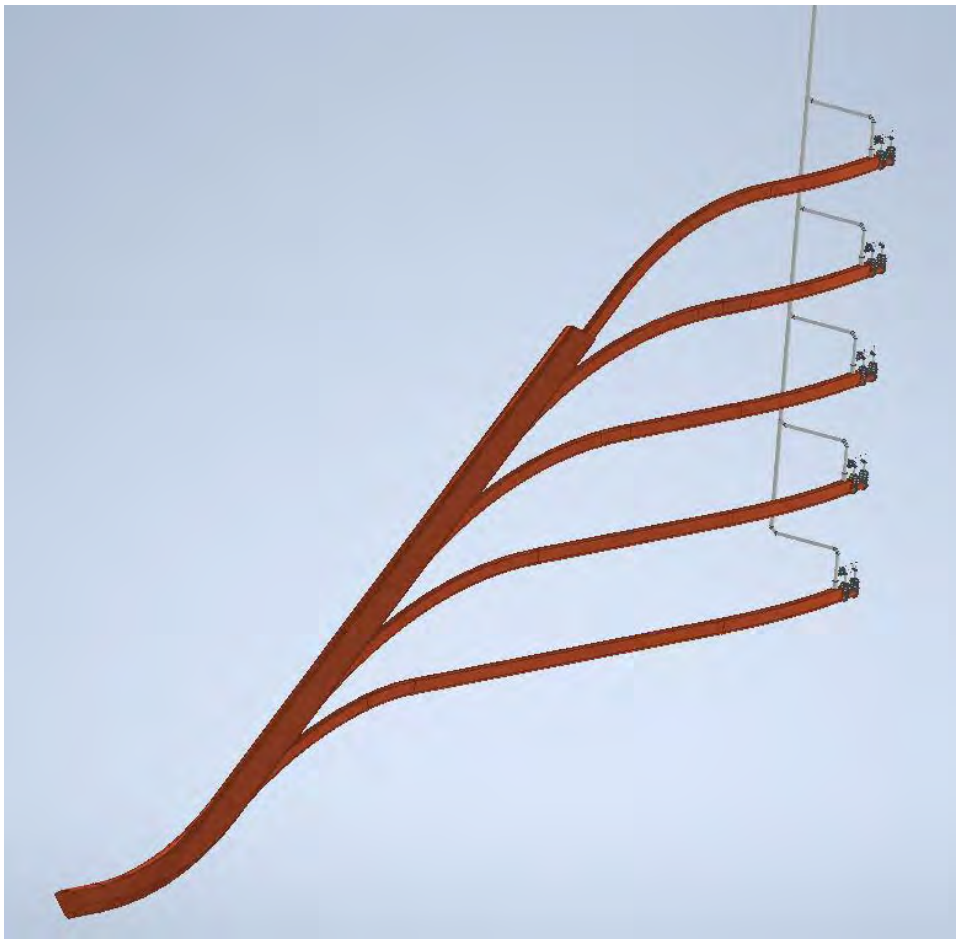

Figure 2-11: Primary bypass from MIS (right) to deceleration channel (left).

2.11. Full Flow Bypass

The full flow bypass system is a set of two concrete channels that convey the screened water to the deceleration channel. Under normal operations the full flow bypass will not transport fish; however, provisions are included that would allow fish to be transported via these conduits if the screens become clogged or if adaptive management strategies call for it. Each channel is 4’ wide and 8’ high. Three horns will feed one conduit and two ports will feed the other. Each conduit will be constructed with stainless steel plate upstream and downstream from the service gate slot (See Figure 2-12). Concrete will require a class A surface finish and 6 inches of cover over embedded rebar. This finish will require significant hand grinding and epoxy repair. Specialized hydraulic detailing will be required near the flow control/service gate. Each main conduit will be connected to the collector structure via feeder conduits. Feeder conduits will require a transition feature to align the port discharge. Additional concrete structure will be required to support the conduit and provide equipment installation access.

Flow control is achieved using vertical regulating gates with a vertical hydraulic operator. One service gate is placed near the ogee as overhead space allows. The emergency closure gate is placed upstream as space allows. Downstream channel will be vented using 36” pipe (not shown in figures below).

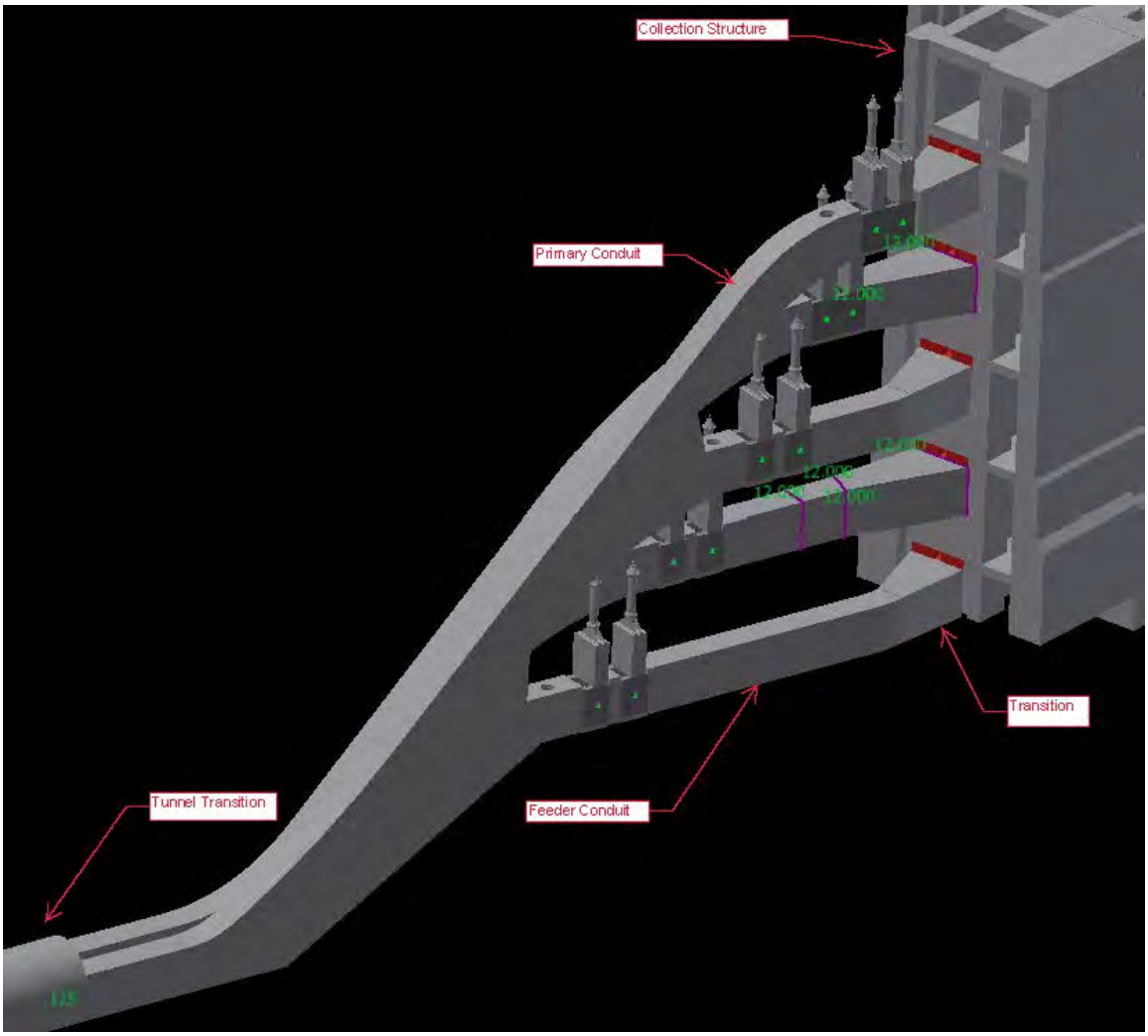

Figure 2-12: Concept model- Isometric view

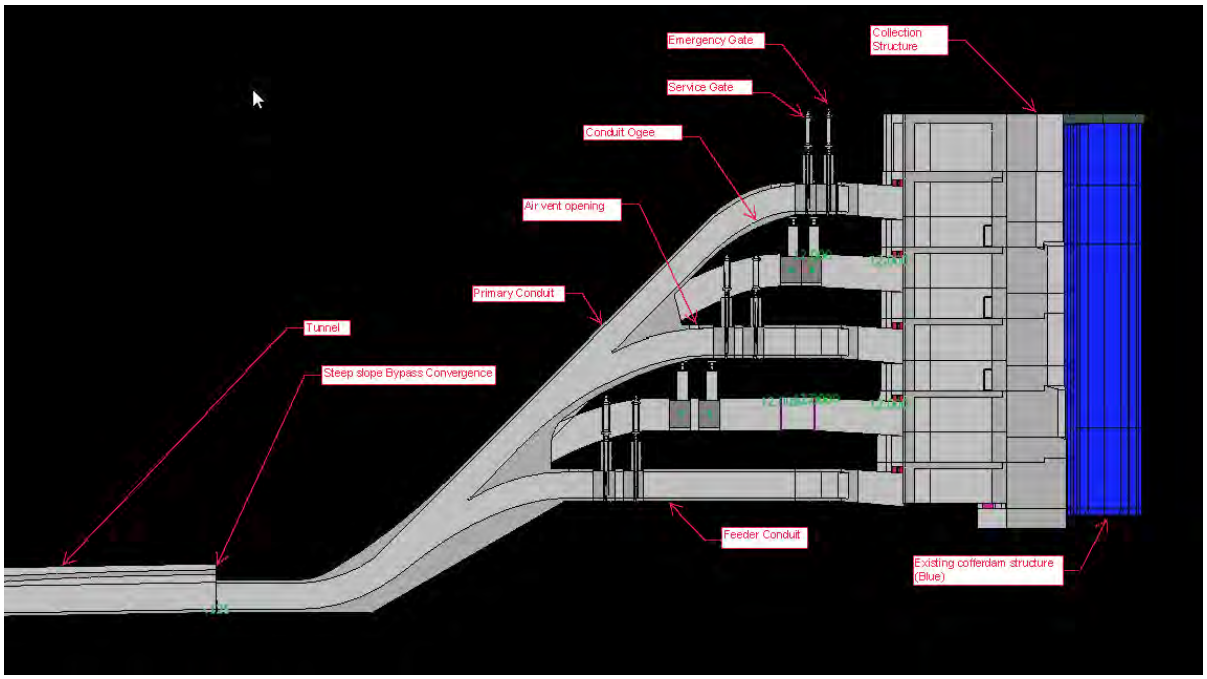

Figure 2-13: Concept model- Section view

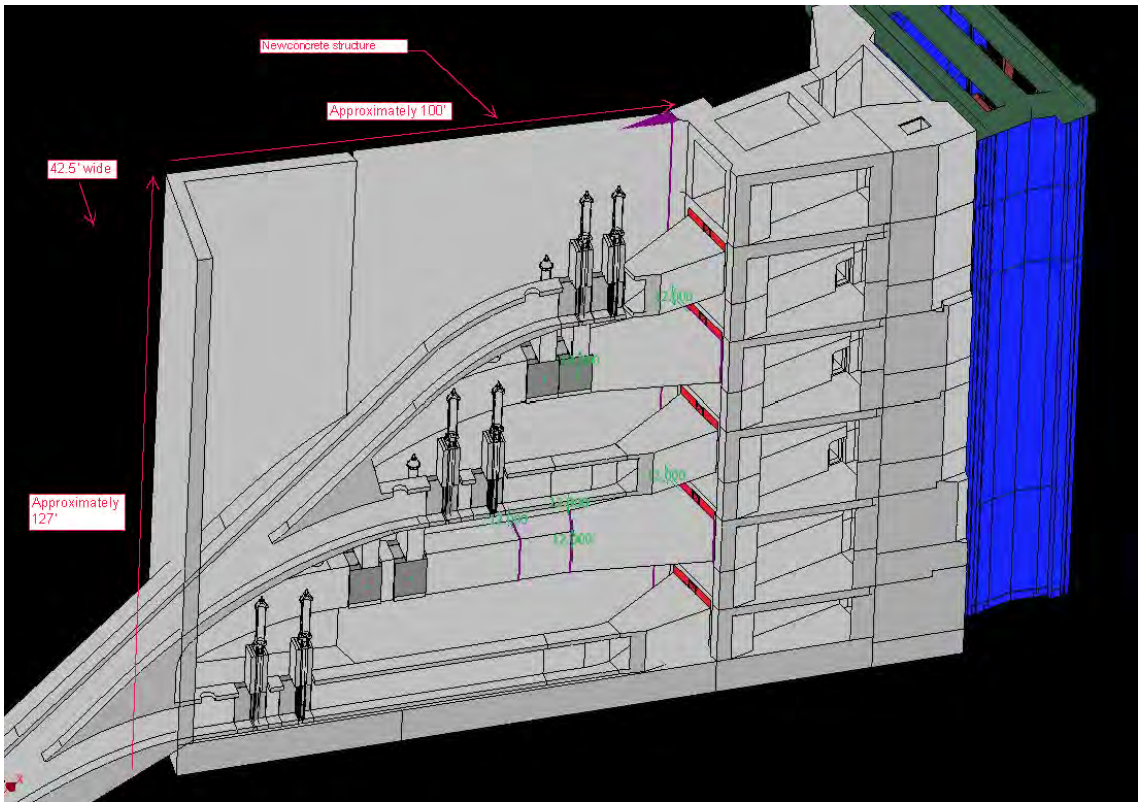

Figure 2-14: Concept model- Section-Isometric view

Figure 2-14 denotes the need for structural features to encase the outlet works associated with the full flow bypass and steep slope bypass features. Future design efforts, not indicated in the figure, will be required to detail equipment rooms, equipment access passageways, sump system, stairwell and access platforms and elevator provisions.

2.12. Tunnel

The tunnel configuration is shown in Figure 2-15. The tunnel is cast in place concrete with a class A finish. The tunnel length is approximately 1,220 ft. The geometry of the primary bypass may change in the design phase. Detail on material volume, dimensions, and construction is included in the planset.

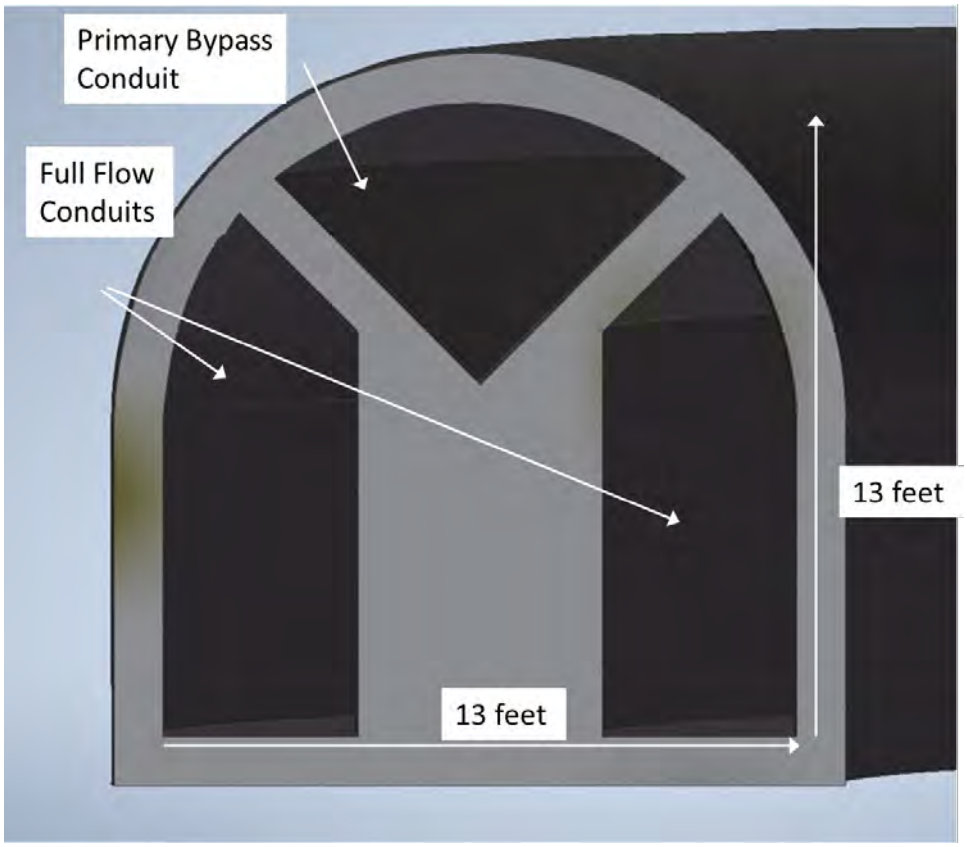

Figure 2-15: Tunnel Concept model - Section-view

The deceleration tunnel alignment is shown below. The upstream end connects to the bottom of the steep slope. The downstream end connects to the Outfall Stilling Basin. It is a 15-ft (OD) horseshoe tunnel. Additional information on tunnel excavation is discussed in Section 2.15.

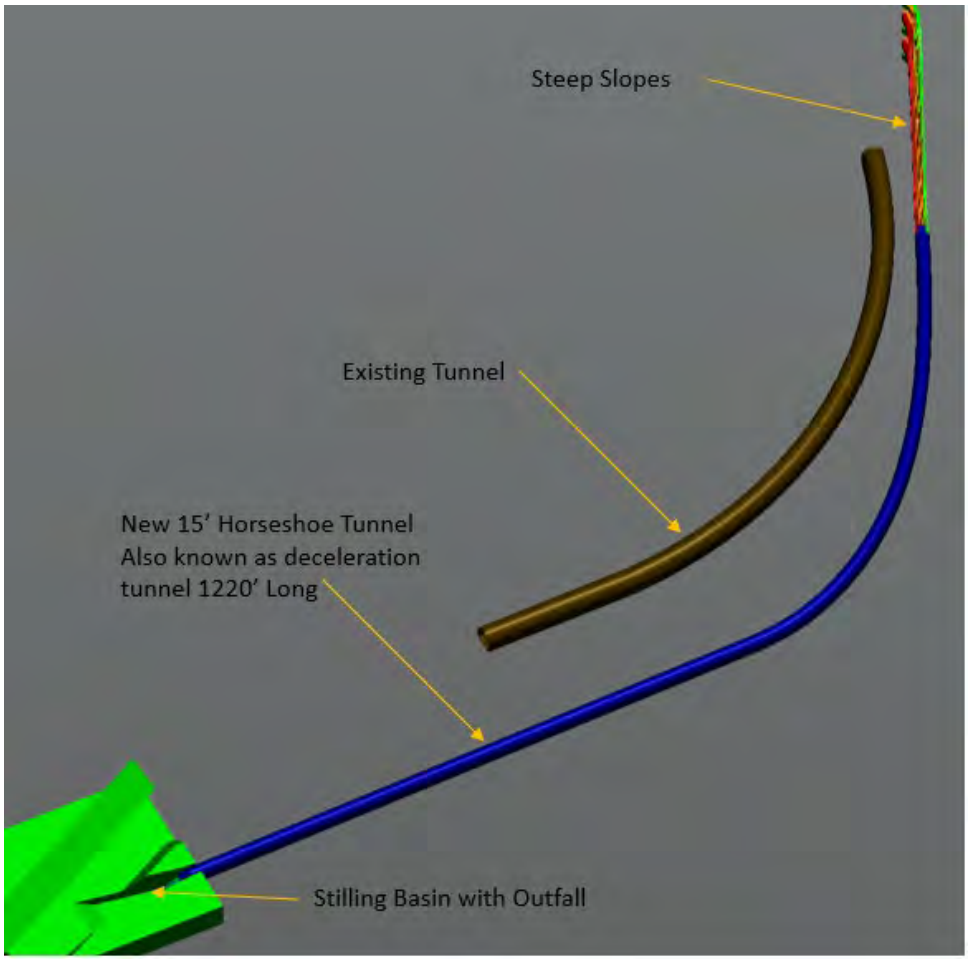

Figure 2-16. Deceleration Tunnel Alignment

2.13. Outfall Stilling Basin

The Outfall Stilling Basin is downstream of the deceleration tunnel. The outfall stilling basin is located approximately 200 feet downstream of the existing tunnel stilling basin. The 15-foot horseshoe tunnel transitions to a 13-foot wide horseshoe shape at the exit. The stilling basin fans out to 35 feet wide over a length of 62 feet at elevation 998 feet. The end sill is at a 1:2 slope and an elevation of 999 feet. To create a scour pool at the end of the stilling basin, the river channel around the stilling basin is excavated to elevation 996 feet downstream of the end sill before rising back up to the natural river channel elevation of 1,005 feet. The primary bypass outfall pipe extends 200 feet further downstream of the FPF stilling basin, and releases into a pre-formed scour pool.

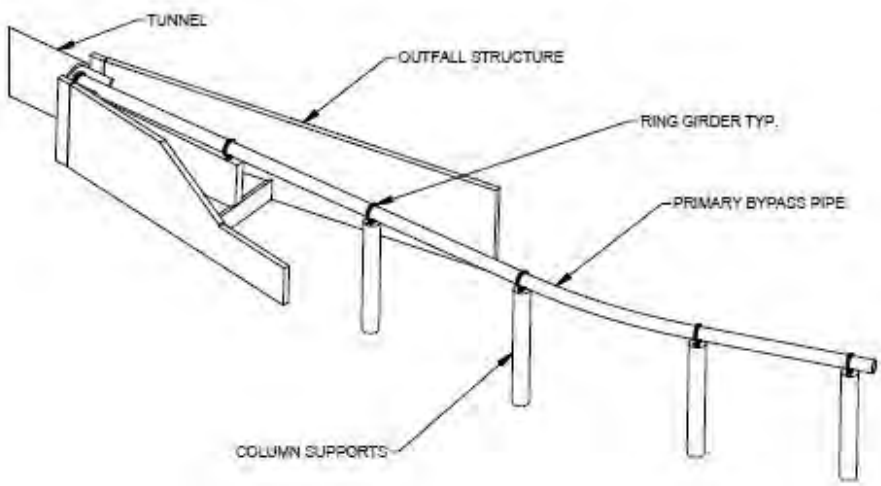

Figure 2-17: Stilling basin geometry, supports, additional features

The outfall stilling basin and associated features is located under the flow path for the spillway at HAHD and in the event that the spillway is used at the facility it will likely result in major damages to the outfall facility. This was seen as an acceptable risk to the project due to the low risk (1/820 AEP) of an event that requires the use of the spillway.

2.14. General Site

The general site improvements include construction of the 1181' working deck, guidewall for the entrance structure, access road improvements, and downstream left bank stabilization. The 1181' working deck will provide dry access to the facility when Phase II is implemented (increase conservation pool elevation to 1177'). The working deck will provide a hardened concrete working surface for crane and forklift access around most of the facility and provides an area for stoplog storage. Supporting the working deck on the edge of the reservoir is the guidewall for the entrance structure. This wall was placed to guide flows and fish towards the entrance structure.

Access road improvements include Access road 1 (upstream face of HAHD), Access Road 2 (new access to upstream side of spillway gates), Access Road 3 (network of works around administration building), and the outfall stilling basin access road (left bank). Overall access roads will be modified to meet the required grades for the 1181' deck and to facilitate safe travel for the increased usage expected around the facility's structures. The outfall stilling basin road includes a bridge to cross over the new stilling basin and maintain the existing access to the tailrace.

Due to known stability issues on the left bank downstream of the dam, the previous 2014 left bank erosion protection design has been incorporated into this design to protect the outfall stilling basin and associated structure from damage. This includes regrading the hillside to create stable slopes and drainage improvements to control stormwater as if flows down the steep hillside.

2.15. Excavation

Rock excavation will be required for the collector and bypass structure construction. The current excavation base is at elevation 1,074 feet and will need to be deepened by about 20 feet to elevation 1,054 feet to accommodate the collector facility. To accommodate the bypass structure, the excavation will be extended to the north-west by 130 feet long and 50 feet wide with a maximum depth of about 140 feet, or base elevation of about

1,024 feet. Similar to previous construction phases, excavation will be completed by drilling and blasting. Rock stabilization will be installed as necessary after completion of each excavated lift.

The tunnel will extend 1,225 feet from the bypass excavation to the stilling basin. The tunnel excavation will be 16-foot diameter to accommodate ground support and excavated using drill and blast methods. Ground support will be installed as the tunnel is advanced. The last 100 feet of the tunnel will be an open cut excavation due to lack of ground cover.

The outlet structure stilling basin and preformed scour hole will require an excavation about 200 feet long with a maximum width of about 60 feet. Excavation depth varies and will extend to about elevation 992 feet. Excavation will occur in overburden and rock. Rock excavation will be completed by drilling and blasting. Rock cut slopes will have stabilization measures installed as needed.

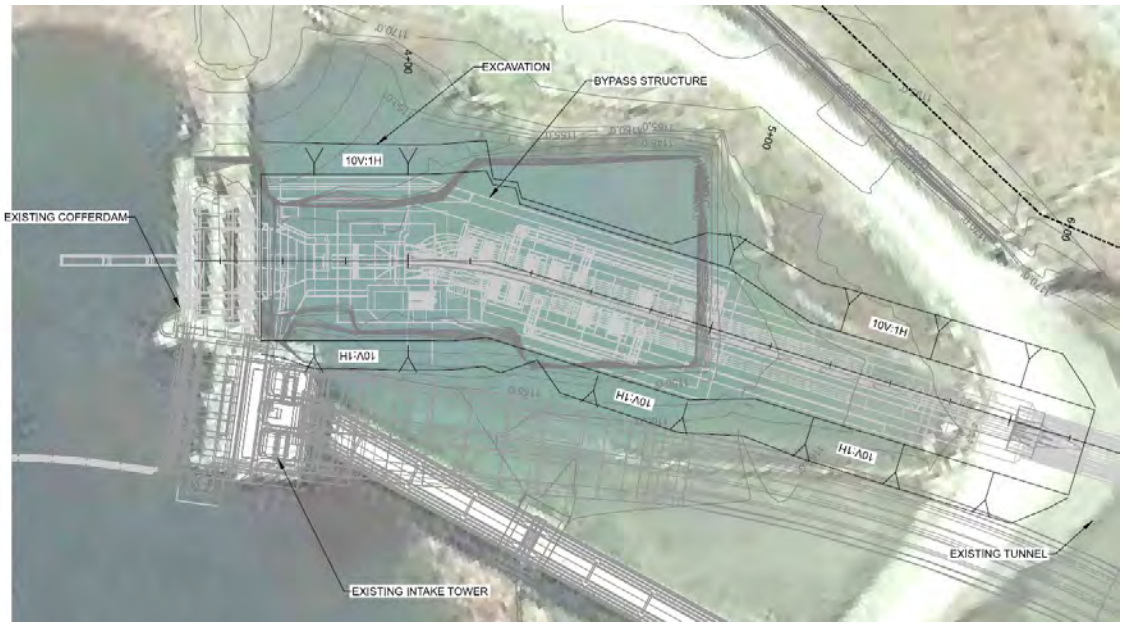

Figure 2-18: Excavation extents of the bypass structure.

2.16. Gantry Crane

The intake gantry serves several purposes; unwatering bulkheads, cofferdam stoplog debris collection, and emergency gates and support systems for the existing regulating outlet. The crane will be rated for 50 tons. Both the cofferdam stoplogs and new collector unwatering bulkheads each weigh approximately 30 tons and the emergency gate for the regulating outlet weighs approximately 45 tons. These are the heaviest structures required to be handled by the crane. The 50 ton rating should be sufficient to accommodate seal friction and incidental sediment infill along with the weight of the structures. Additionally the crane will serve to collect debris which gathers on the trash racks upstream of the collector horns. The crane will also operate the 4-foot bypass for the existing outlet. In order to do this the crane will travel on rails extending across both the new collector structure and the existing outlet structure. The crane will consist of a main hoist rated at 50 tons and a boom hoist rated at 15 tons at a radius of 50 feet. The existing cofferdam structure is only able to support a maximum pick of 25 tons. In order to accommodate the higher rating, the cofferdam structure will need to be reinforced. All values here are approximate and should be validated during the design phase of this project. See more discussion on the intake crane in chapter 9.

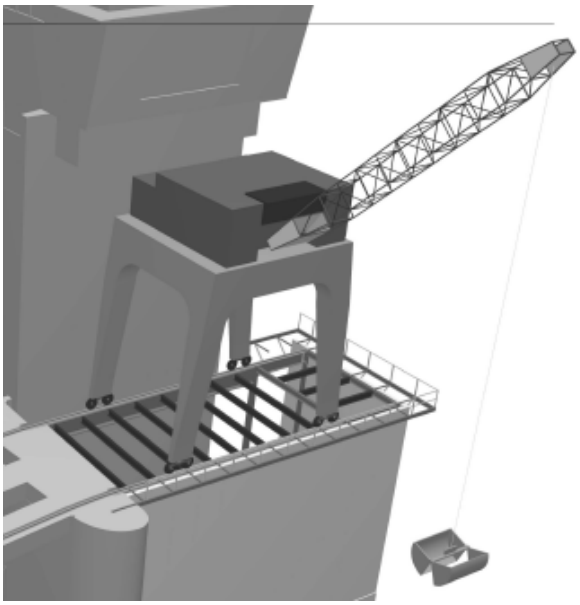

Figure 2-19: Gantry crane on intake.

3. Hydrologic & Hydraulic Design

3.1. H&H Design Summary

The hydraulic design considers features including the upstream log boom, trash rack, fish collector, dewatering screen flow control, steep slope bypass, full flow bypass, deceleration tunnel, outfall and stilling basin.

3.2. Design Criteria

The regulations and criteria documents used in the design of the fish passage facility are specified below by number. The criteria presented in the following section references these documents by number, to provide a direct basis for criteria. The Regulations/Criteria Documents are as follows:

1. EM 1110-2-1602 Hydraulic Design of Reservoir Outlet Works.
2. EM 1110-2-1601 Hydraulic Design of Flood Control Channels.
3. EM 1110-2-1603 Hydraulic Design of Spillways.
4. HDC Hydraulic Design Criteria, Sections 000-700 inclusive.
5. NMFS Anadromous Salmonid Passage Facility Design, July 2011
6. HAHD Additional Water Storage Project, Fish Passage Facility, 95% IEPR DDR (2009)*
7. Willamette Valley High-Head Bypass Design Parameters Report (2019)
8. PNNL Laboratory Studies on the Effects of Shear on Fish (2000)
9. AECOM Howard Hanson Dam Fish Passage Facility Physical Hydraulic Model Study (2011)

* The 95% DDR previously completed for this project determined fish passage criteria in addition to NMFS guidance. This guidance is used where applicable for the design. From the 95% report:

"NMFS has not developed specific hydraulic design criteria for inclined screens of the type employed here, since the method of passing fish in the pressurized regime over inclined screens (e.g., Eicher Screens and Modular Inclined Screens) is considered to be experimental. In such instances, NMFS "encourages research and development" and has prescribed an experimentation and demonstration process necessary for NMFS support of a permanent facility. The process includes literature research, coordination, laboratory research, and prototype evaluation to develop and demonstrate a design (NMFS 1995) that meets or exceeds efficiencies demonstrated by positive-exclusion screen and bypass systems (PSEBS)1. Seattle District has followed this process through planning and design by:

1. Extensive literature review, consultation, and technology exchange regarding existing and experimental inclined screen facilities.
2. Establishment of the Fish Passage Technical Committee, consisting of recognized fisheries experts and representatives of pertinent regulatory agencies, for the various purposes of: (a) study plan and criteria development assistance, (b) planning and design consultation, (c) planning and design review, (d) coordination assistance, and in some instances (e) element design.
3. Execution of an extensive physical hydraulic model studies program.
4. Formulation of prototype evaluation plans.

Criteria that differ from the NMFS 2011 criteria will be discussed in continued consultation with the required regulatory agencies as the design progresses.

3.3. Specific Design criteria:

The criteria for the collector and passage route is presented from upstream to downstream.

3.3.1. Fish Collection Structure

- The Multiport collector will remain mostly 'as is', as designed in 2009 DDR[6]
  - Invert elevations, horn geometry, and orientation remain unchanged
  - Personnel access to each horn is needed for maintenance.
- The excavation will be expanded toward the spillway. The change in geometry will need to demonstrate minimal impacts to the Project's ability to pass floods.
- The upstream trash rack will be spaced to pass adult steelhead (kelts) and fallback Chinook salmon.
  - A minimum 10" flat bar vertical spacing and minimum 24" lateral support bar spacing will be used[5]
- Holding and handling should be avoided; if unavoidable, steps should be taken to minimize holding and handling.[7]
- Before the bypass entrance, all practical means must be used to remove as much debris as possible, especially large debris that may cause blockage[7]
- Debris management systems must not pose a threat of injury to fish or delay fish entry[7]
- The entire bypass system must be designed to be dewatered and inspected visually either through direct access (e.g. ports or an open channel) or remote equipment. The system also must be designed to allow for the removal of any debris within the bypass. [5, 7]

- Any velocity increase must be <= 0.3 fps per foot of travel to ensure an acceleration profile that reduces risk of fish rejecting the bypass entrance. This matched the criteria adhered to in the collection horn itself.[6]
- Deceleration between the capture point and bypass entrance may be necessary for[7]:
    - Debris removal
    - Transition from free surface to full flow conduit at entrance
    - Passage monitoring (e.g. passive integrated transponder (PIT-tag) detection or Vaki counter)
    - Additional dewatering upstream of a conduit entrance

3.3.2. Collector Horn Operations

- Total attraction flow will have a maximum of 600 cfs per collector (horn); 1.2 kcfs total for two collectors in operation.6
- Minimum attraction flow will be 230 cfs6
- Flow through one horn will be between 230 and 600 cfs, and when attraction flow is in excess of 600 cfs it will be split between two horns up to the maximum flow6
- The facility will shut down when inflow reaches or exceeds 4,000 cfs.6
- The water velocity gradient upstream of the screen (in the collector horn) will be less than 0.3 feet per second per linear foot of approach when the velocity is between 2 and 6 feet per second. A higher gradient is acceptable when velocity is above the fish capture velocity (6 fps).6
- No water pressure below atmospheric pressure in fish pathway is acceptable7

3.3.3. Dewatering Screen

- Design is proceeding with inclusion of dewatering screens, ideally in a configuration that would allow for exclusion of screens in the design phase if warranted.
- For optimum debris shedding, bar screen is oriented perpendicular to flow[6]
- The screen angle will be approximately 17 degrees.[6]
- The mean water velocity in the approach channel will be 6-8 fps.[6]
- No unacceptable noise or vibration will be caused by the fish screen / porosity plate assembly[5]. Quantitative design guidance will be investigated in PED phase
    - The ratio of maximum velocity normal to the screen to average upstream enclosure velocity (Vn/ Vo) must be less than 0.45.[6]
    - The ratio of screen sweeping velocity to screen normal velocity (Vs /Vn) must be above 2.2.[6]
- The maximum fish screen bar open spacing is 0.068 inches (1.75 mm). [5]
- The fish screen porosity will be between 40% to 60%.[6]
- The bar screen and perforated plate assembly must meet the above guidelines, without exceeding a headloss of 10 feet, measured across the MIS assembly.[6]

3.3.4. Full Flow Bypass Downstream of Dewatering Screen

The conveyance of the screened attraction flow through the dam will:

- Be dewatered and bypassed in same area
- Move from pressurized to atmospheric
- Have a maximum shear (strain rate) criteria of 500cm/s per cm.

    - Free-fall within a pipe or other enclosed conduit in a bypass system should be avoided if possible.[5,7]
    - Downwells and convergence/divergence sections must be designed for safe and timely fish passage, considering turbulence, geometry, and alignment.[7] (Note: differs from NMFS criteria to have a free surface.)
    - Pressure in a system should be >= 7.2 psia (~ 0.5 atmosphere). [7](Note: differs from NMFS requirements to be > atmospheric.)
    - Avoid pressure change rates > -500 psi/sec (Abernathy et al. 2002).[7] (Note: differs from NMFS criteria that pressurized to non-pressurized transitions must be avoided.)
    - Use of bends should be minimized in the layout of bypass pipes due to the potential for debris clogging and turbulence.[5,7]
    - R/D ratio should be maximized and above an R/D of 5. Consider the conduit shape and canting of the conduit to minimize debris issues, turbulence and keep fish centered in the water volume.[5, 7]
    - Bypass pipes and flumes diameter or widths must be >= 12 inches to reduce risk of debris blockage and accommodate adult sized fish.[7] (Note: differs from NMFS criteria that bypass pipe size is chosen from depth and velocity criteria.)
    - If bypass pipe is less than 18 inches, the depth for sub-critical free surface flow must be >= 40% of the diameter.[5,7]
    - In conduits larger than 18 inches, depths less than 40% could provide safe conditions depending on fish size, velocity, alignment, and the roughness of the conduit.[7] (Note: differs from NMFS criteria that depth must by > 40% pipe diameter.)
    - Bypass velocities >= 4 fps (to ensure fish are conveyed quickly through the system and to minimize holding and delay.)[7] (Note: differs from NMFS criteria that velocities should be between 6 – 12 fps.)
    - For velocities between 12 fps and 30 fps (12 fps <=V< 30 fps), consideration of other conditions in the bypass will be necessary, including conduit alignment, risk of shear, deceleration of water and fish, and uniformity of flow. [7] (Note: differs from NMFS criteria that velocities should be between 6 – 12 fps.)
    - For velocities between 30 fps and 50 fps (30 fps <=V<=50 fps), extensive analysis, including numerical modeling and prototype testing could be required. [7] (Note: differs from NMFS criteria that velocities should be between 6 – 12 fps.)
    - Gate openings in the Full Flow Bypass will not be restricted when the MIS are operating, and the Primary Bypass is passing fish. When the Full Flow Bypass is being used as the passage route, gate opening restrictions will be based on shear and pressure criteria outlined above.

3.3.5. **Primary Steep Slope Bypass:**

The primary steep slope bypass conveying reduced water and fish downstream will:

- Have a vertical curve at upstream end of steep slope bypass with an ogee shape ratio of 1.[3]
- Have an alignment required to mitigate for site conditions (rock quality, faulting, existing structures, within property boundaries).
- Maintain an alignment that allows use of the existing 36” bypass for stilling basin maintenance.
- Ensure slackwater (reverse channel slope) from the outfall upstream to the stilling basin (i.e. channel is not dewatered).
- Use tight tolerances for gaps and moving parts to avoid fish injury

  - Have a maximum shear (strain rate) [8] criteria of 500 cm/s per cm.
  - Avoid pressure change rates > -500 psi/sec (Abernathy et al. 2002).

3.3.6. **Deceleration and Outfall:**

  - Peak deceleration <=100 ft/s^2 (30.5 m/s^2).[7]
  - Average deceleration <= 4 ft/s^2.[7]
  - Consideration should be made to reduce the number of acceleration events and try to reduce the acceleration rate as much as possible to reduce the risk of shear injury and passage related stress.[7]

- Bypass outfalls must be located to minimize predation by selecting an outfall location free of eddies, reverse flow, or known predator habitat. The point of impact for bypass outfalls should be located where ambient river velocities are greater than 4.0 ft/s during the smolt out-migration[5]
- Bypass outfalls must be located where the receiving water is of sufficient depth (depending on the impact velocity and quantity of bypass flow) to ensure that fish injuries are avoided at all river and bypass flows. The bypass flow must not impact the river bottom or other physical features at any stage of river flow[5]
- Depth is based on the minimum design flow of 230 cfs.[6]
- Maximum bypass outfall impact velocity (i.e., the velocity of bypass flow entering the river) including vertical and horizontal velocity components should be less than 25.0 ft/s.[5]

3.4. Fish Collector

3.4.1. **Fish Collector Configuration**

There are 5 fish collector horns numbered from 1 at the bottom to 5 at the top. The horns are all similar in geometry. The upstream flare of the horns is 22 feet wide by 14.5 feet tall. This transitions to 11 feet wide by 9 feet tall at the upstream end of the screen. The primary bypass then reduces to a 16” diameter orifice above the screen before expanding back to a U-shaped flume with a 16” diameter bottom and a height of 3 feet sloping at 1%. Flow passing through the screen enters a transition channel which narrows to 4 feet wide by 8 feet tall. Pertinent elevations for the collector are available below (with the minimum operating elevations adhering to the 7.24’ minimum

submergence requirement; see Section 3.4.2 for details). Each horn will pass a maximum of 600 cfs with the intention to have the ability to operate 2 horns simultaneously for a total fish passage flow of 1,200 cfs.

Horn 5

Max operating WS	1177.0	feet, NGVD29
Min Operating WS	1167.1	feet, NGVD29
Top Elevation	1160.1	feet, NGVD29
Bypass Orifice Invert	1158.9	feet, NGVD29
Horn Invert	1151.0	feet, NGVD29
Full Flow Gate Invert	1149.5	feet, NGVD29

Horn 4

Max operating WS	1177.0	feet, NGVD29
Min Operating WS	1145.1	feet, NGVD29
Top Elevation	1138.1	feet, NGVD29
Bypass Orifice Invert	1136.9	feet, NGVD29
Horn Invert	1129.0	feet, NGVD29
Full Flow Gate Invert	1127.5	feet, NGVD29

Horn 3

Max operating WS	1167.1	feet, NGVD29
Min Operating WS	1123.1	feet, NGVD29
Top Elevation	1116.1	feet, NGVD29
Bypass Orifice Invert	1114.9	feet, NGVD29
Horn Invert	1107.0	feet, NGVD29
Full Flow Gate Invert	1105.5	feet, NGVD29

Horn 2

Max operating WS	1145.1	feet, NGVD29
Min Operating WS	1101.2	feet, NGVD29
Top Elevation	1094.2	feet, NGVD29
Bypass Orifice Invert	1093.0	feet, NGVD29
Horn Invert	1085.0	feet, NGVD29
Full Flow Gate Invert	1083.5	feet, NGVD29

Horn 1

Max operating WS	1123.1	feet, NGVD29
Min Operating WS	1079.1	feet, NGVD29
Top Elevation	1072.1	feet, NGVD29
Bypass Orifice Invert	1070.9	feet, NGVD29
Horn Invert	1063.0	feet, NGVD29
Full Flow Gate Invert	1061.5	feet, NGVD29

3.4.2. Fish Collector Submergence

Previous design efforts indicate a minimum submergence of 7.24 feet is needed to prevent an inlet vortex and subsequent drawing of surface debris into the fish collector. This assumption will be verified as changes to the inlet hydraulics are made. The design may eventually allow for removal of the fish screens – or extended operation in the neutral position – in which case the surface debris may be less of an issue and collection at 0 feet submergence may be allowed. This is potentially beneficial to fish on the surface for under certain conditions no sounding depth would be required for passage and interactions with dewatering screens would be eliminated.

The required sounding depths for fish to pass through the structure are dependent on forebay elevation and the fixed port elevations. With multiple ports there is flexibility in the operation, but the design intent is to have the upper most port operating when fish passage flows are 600 cfs or less, and the upper two most ports operating when fish passage flows are between 600 and 1,200 cfs. Assuming the port needs to be at least 7 feet submerged to operate the minimum sounding depth will be 7 feet. With one port operational the maximum sounding depth will be about 29 feet to the top of the port. With dual port operation fish would have the option of using the upper port and maximum sounding depth listed above, but the lower port would also be in operation and fish would be allowed to enter that horn at a maximum sounding depth of 51 feet to the top of the horn, or 60 feet to the bottom. Future debris and fish behavior studies may inform modifications to the 7’ submergence requirement.

3.5. Flow Control

Primary bypass flow volume is dependent on forebay elevation. Flow through the primary bypass is restricted via an orifice downstream of the dewatering screen, but upstream of the knife gates. The gates are not used to control flow rate, but rather used in the closed or fully open positions. The orifice is a 16” diameter and must transition from the rectangular section at the screen to a round section at the orifice. The full flow bypass flow is controlled by a gate downstream of each dewatering screen. While the system is in operation, this gate will regularly be throttled to control the total flow through the screen. There is an additional gate for each horn used as an emergency/maintenance closure. Preliminary regulating gate shaping was used in the CFD modeling, with a standard 45-degree angled gate shape.

3.6. Steep Slope Bypass

3.6.1. Primary Bypass

The primary bypass transports fish and some flow downstream through the dam and into the river channel downstream of the dam. The layout of the bypass has a single path, combining flow from each horn, and quickly reducing in elevation to the bypass tunnel, minimizing excavation required. The bypass is a 16” wide steel U-flume 3 feet tall sloping at 1% with variable length associated with the different horns. The steep slope section is also assumed to be steel lined and has a slope of 1:1 with a cross section similar to a V-channel with 1:1 side slopes but includes a radiused base. Flow then transitions to a concrete deceleration tunnel where velocities can gradually reduce within a V-channel at a slope of .018% for 1219 feet prior to release to the river via the outfall pipe described below in the outfall section. Design of the primary bypass is roughly based on the Green Peter bypass with changes to improve safety for fish and accommodate velocities above 50 fps and higher volume flow rates.

3.6.2. Full Flow Bypass

The full flow bypass passes the remaining attraction flow water. This bypass is screened off by a Modular Intake Screen (MIS) to prevent fish from entering, but design improvements were included to maximize safety for fish if they are passed through this channel. These improvements mimic the design of the primary bypass and standard spillway designs.

To improve hydraulics in the full flow bypass, the bypass is split into 2 channels with horns 1, 3, and 5 combining into the left channel, while horns 2 and 4 combine into the right channel. The bypass was configured in this manner so that consecutive horns in operation will each have a separate channel and eliminate combining flow conditions. The full flow bypass utilizes the same distances and slopes as the primary bypass while having a box cross section with a width of four feet and height of eight feet.

The MIS were studied extensively with a 1:8 physical model in 2011, and porosity plates were utilized on the backside of the screens to help redistribute the flow velocities evenly across the screens (AECOM 2011)[9]. Eight porosity panels, running from upstream to downstream, were tested with various porosities until the ideal head loss and velocity distribution was achieved. The final distribution of porosity panels is presented in Table 3-1.

Table 3-1. MIS Porosity Plate Distribution

Upstream → Downstream

Screen Panel #	Backing Plate Porosity
1	---
2	---
3	0.33
4	0.33
5	0.23
6	0.23
7	0.23
8	0.15

Notes: 1) --- indicates the absence of a preforated backing plate

3.6.3. Alignment

The alignment of the tunnel housing both the primary and full flow bypass is based on the design criteria of HDC 660-1 and HDC 660-2. The intent of the alignment is to minimize flow disturbances within the tunnel by reducing superelevation of flow. The main curve follows criteria for a spiral curve design, which has a decreasing radius as the curve progresses. Care was taken to meet hydraulic criteria while avoiding encroachment toward the railroad property, even though the tunnel is 100+ feet underground.

3.7. Outfall

3.7.1. Stilling Basin

The stilling basin is a divided structure acting as two independent structures designed to contain a hydraulic jump from a single port when flows are at a maximum 600 cfs on a single side with a corresponding minimum expected tailwater elevation of 1,008 feet. Basin is also capable of handling discharges up to 1200 cfs with both sides in operation and a corresponding 1010 tailwater elevation. Design of the stilling basin is based on the method described within EM 1110-2-1602. The stilling basin will incorporate a parabolic transition from the deceleration tunnel exit to basin apron. Stilling basin length

approaches 62 feet with an overall width at the end sill of 35 feet. The stilling basin apron is at elevation 998 and incorporates an end sill that is 1 foot in elevation and has a 2:1 slope.

3.7.2. Downstream Channel

Just downstream of the stilling basin the downstream channel requires a preformed riprap lined scour hole to help dissipate excess energy from the stilling basin and provide favorable hydraulic conditions for fish traveling downstream. Design of the scour hole is based on the method in EM 1110-2-1602. The scour hole should be approximately 60 feet wide, which is 2 times the width of the stilling basin. The scour hole depth should be at elevation 995.7 feet, NGVD29, or about 2.3 feet below the stilling basin floor. Side slopes are 3:1, except on the left bank where geometry is control by the existing terrain.

3.7.3. Outfall Location

The fish outfall location will be located approximately 200 feet downstream of the full flow bypass stilling basin. This will allow for the fish to be released outside the zone of excessive turbulence. The downstream outfall location is based on the following considerations:

- The location should be out of the influence of the turbulence of both the existing stilling basin, and the new stilling basin.
- Should be located into the area where both sides of the river are forested for better overall habitat.
- Should allow for personnel access to the location to install fish collection equipment to sample fish for health and condition.
- The character of the river bed should be assessed for the best release conditions including
    - minimum depth
    - correct velocity range
    - substrate type - gravel vs cobble/boulder
- Additional NMFS location guidance
    - 11.9.4 Specific Criteria and Guidelines – Bypass Outfall
    - 11.9.4.1 Location: Bypass outfalls must be located to minimize predation by selecting an outfall location free of eddies, reverse flow, or known predator habitat. The point of impact for bypass outfalls should be located where ambient river velocities are greater than 4.0 ft/s during the smolt out-migration. Predator control systems may be required in areas with high avian predation potential. Bypass outfalls should be located to provide good egress conditions for downstream migrants. Bypass outfalls must be located where the receiving water is of sufficient depth (depending on the impact velocity and quantity of bypass flow) to ensure that fish injuries are avoided at all river and bypass flows. The bypass flow must not impact the river bottom or other physical features at any stage of river flow.
    - 11.9.4.2 Impact Velocity: Maximum bypass outfall impact velocity (i.e., the velocity of bypass flow entering the river) including vertical and horizontal velocity components should be less than 25.0 ft/s.
    - 11.9.4.3 Discharge and Attraction of Adult Fish: The bypass outfall discharge into the receiving water must be designed to avoid attraction of adult fish thereby reducing the potential for jumping injuries and false

attraction. The bypass outfall design must allow for the potential attraction of adult fish, by provision of a safe landing zone if attraction to the outfall flow can potentially occur.

3.7.4. Outfall Pipe

The fish outfall location will be reached by providing a 4-foot diameter pipe from the end of the deceleration tunnel to the location approximately 200 feet downstream from the end of the stilling basin. The outfall pipe is supported on piers every 55 feet for 210 feet and then cantilevers beyond the last pier 15 feet before releasing the primary bypass flow. The outfall pipe slopes at 0.55% with an invert elevation of 1011.35' at release with 1007 to 1013.5 tailwater range during operation. The range of discharges from the fish outfall pipe is 25 cfs to 106 cfs, see appendix B-1.3 for more detail.

3.7.5. Outfall Plunge Pool

A scour hole is recommended to reduce potential for fish injury from the plunging flow release of the primary bypass. Depth of the scour hole was based on design parameters developed for outfalls on the Columbia and Snake River systems. Relative comparisons to ultimate scour depths were made to ensure equivalent levels of energy dissipation where achieved. The recommended depth of the plunge pool is 17 feet deep resulting in a floor elevation of 991 feet, NGVD29 with downstream exit slope of 3:1.

3.8. Hydrology

The heaviest rainfall and, consequently, the highest runoff generally occur during the winter storm season from November through March. Runoff during this period is characterized by frequent sharp peaks of short duration; and consequently short periods of high pools. However, peaks may be separated by periods of relatively low flow and pool when temperatures drop and precipitation falls as snow. Intense winter rainstorms with warm winds and occasional accompanying snowmelt cause the river to swell from relatively low flow to flood levels within 24 to 36 hours. After a storm has passed, flows generally recede relatively rapidly. In April, heavy winter rains begin to abate, temperatures rise, and runoff is generally due to a combination of rainfall and snowmelt. Spring runoff is characterized by peaks that are generally smaller in magnitude than rainflood peaks, but can be of much longer duration. Generally, by late May or June the snowpack is depleted and flows recede rapidly, reaching minimum flow during August or September.

The summer conservation pool was raised to 1167.0 feet in 2007 when Phase I of the AWSP began. Phase II would raise the summer conservation pool to 1,177.0 feet NGVD29, but is yet to be implemented. Data from 2007 to current was used to analyze historical pool elevations and inform fish passage horn usage (**Error! Reference source not found.**). This existing data was used to estimate the percentage of time each horn would be used and the sounding depth required (Appendix A-1).

Additional hydrology information can be found in the 95% DDR and the Howard A Hanson Dam Water Control Manual.

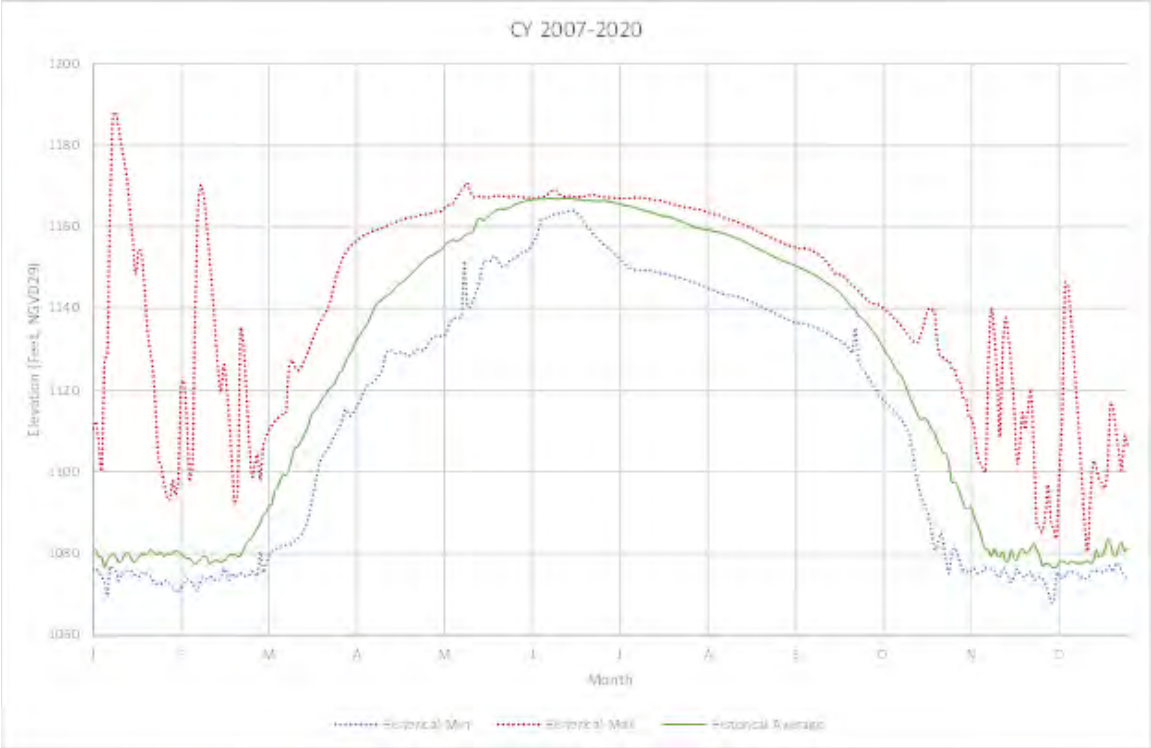

Figure 3-1: Historic Pool Data (2007 – 2020)

3.9. Hydraulic Modeling

3.9.1. Model Selection

Initial design was completed using hand calculations and 1-D models for preliminary sizing and criteria checks. Once the initial geometry was sized, Computational Fluid Dynamics (CFD) modeling was utilized due to the inherent 3D nature of flow through the system and complex geometry. For the CFD modeling, Star-CCM+ was the CFD code used for the upstream pressurized portions of the collector, and Flow3D was utilized for the free surface region of the design. Both models were selected due to their strengths in modeling the specific aspects of the design.

3.9.2. Hand Calculations/1-D models

Hydraulic roughness Determinations/Settings

For the purposes of design manning's values were varied for each segment of primary and full flow bypasses. Manning's n values for coated steel passage routes were assumed to be a value of n = 0.011 (0.010 to 0.012) while concrete passage routes assumed a manning's of n = 0.012 (0.011 to 0.013).

Water surface profiles

Preliminary sizing of the structures and the associated hydraulic characteristics of the bypasses were completed using a direct step method. Initial water surface elevations were based on velocities of the vena contracta of the 16" orifice for the primary bypass and the 4-foot gated full flow bypass. Velocities between upstream and downstream segments with different grade breaks and/or cross-sectional properties were matched and then used to establish the next downstream segments initial hydraulic condition. This approach was repeated until release to the river downstream. Discharge and

roughness were varied to evaluate passage routes segments for the potential to flow full, to identify maximum flow velocities, and to determine maximum energy entering the stilling basin and plunge pool.

3.10. CFD Modeling

Main outputs and conclusions from the CFD modeling efforts are presented below, but the full modeling documentation (including model validation) can be found in the attached CFD Appendix B-2.

Meshing and Boundary Conditions

The upstream model grid for the CFD model runs were created in Star-CCM+ version 15.04. Polyhedral cells were chosen for the mesh, with a base size of 1 ft and refinement in areas of interest. The upstream boundary in the forebay was set as a static pressure value based on the intended forebay elevation, and the tailrace was set below the invert of the steep slope and full flow bypass pipes, to prevent interference with the gravity-based solution. Individual gate settings were estimated based on the intended operation and refined with each model run. Seven run cases were planned to analyze the proposed design, but due to time constraints three runs were selected to give insight into operations of interest: full forebay head with the top two collectors running at full capacity (run 1), an intermediate forebay elevation with a low flowrate split between two collectors (run 3), and a transition run when the top collector is below submergence criteria and flow is transitioned to the next available collector (run 7). Boundary conditions for the runs are presented in Table 3-2.

The downstream model grid for the CFD model runs were created in Flow3D version 12.0.2. Cartesian cells are the only option for the software and sized at 1/8th of a foot for the entire domain of the steep slope analysis and ¼ ft for stilling basin verification. The upstream boundary for all steep slope conditions used discharge volumes as predicted with the upstream Star-CCM+ model results with velocity vectors assigned to run parallel with conduit alignment. Individual gate settings for the full flow bypass were incorporated within the geometry based on the upstream model results. Two conditions were evaluated for the primary bypass. First operation assumes a single horn operation with minimum head from horn 5. The second operation is maximum head condition with horns 4 and 5 in operation. The full flow bypass was evaluated in CFD with a single operation of minimum head and maximum flow from horn 5. Particles with similar density and drag as sensors used to evaluate field conditions were released within the flow domain at a location approximately a ¼ ft downstream of the upstream boundary. Particles (5) were also placed with one in the center of the conduit and 4 additional particles placed at the outer edges or corners of the conduit to attempt to capture the flow domains characteristics.

The hydraulic environment within the steep slope section of the primary and full flow bypasses appears to maintain conditions below thresholds (appendix B-1 and B-2). The recorded strain rates at 16% to 22% of threshold within the primary bypass should not cause fish injury; however future design efforts need to expand the particle release evaluation beyond this preliminary evaluation using only 5 particle per release. Future design efforts can focus on reducing the distance of free fall within the primary bypass at horn intersections and investigate alignment offsets to further reduce strain values if desired. Full flow bypass values at 31% of threshold for pressure change can also be investigated similarly with modification to the vertical curve radius at the base of the full flow bypass.

Table 3-2. Upstream CFD Boundary Conditions

#	FB Elevation	Outflow Total	Collector Flow	Top horn #	Bottom horn #	Top horn cfs	Bottom horn cfs	Top Horn			Bottom Horn		
								Fish Pipe	Bypass		Fish Pipe	Bypass	
	ft	cfs	cfs					Flow	Flow	Gate Setting	Flow	Flow	Gate Setting
1	1167	2500	1200	5	4	600	600	23	577	5.9	44	556	4
3	1142	500	650	3	2	325	325	42	283	2	56	269	2
7	1166	1200	1200	4	3	600	600	42	558	4	62	538	2

Conclusions

The upstream CFD model, using Star-CCM+, successfully matched the through-screen velocities from the 2011 AECOM physical model study as validation, and showed a similar performance to that of the 95% DDR collector design. The velocity criteria through the collector for the primary bypass (unscreened flow) was met on the upstream end, but the approach velocity and sweeping flow for the MIS was not investigated in the CFD model for this phase of design due to not including the backing porosity plates in the model. The full-flow bypass transitions did not affect the MIS screen hydraulics. These comparisons and analysis are included in the attached CFD Appendix (Appendix B-2). The major design feature that was updated per this model was the transition between the downstream end of the collector horns and the start of the steep slope bypass. The original proposed transition was abrupt, occurring over a 0.5-ft distance and transitioning between the rectangular collector cross section, and the circular 16-in orifice. This transition provided an abrupt pressure change, which fell outside of the -500 psi/sec design criteria. To bring the design back within criteria, the transition was lengthened to 3.5-ft, which provided a gradual pressure profile. The outputs from the upstream model, including calculated discharge coefficients and head conditions, are presented in Table 3-3 and Table 3-4. The approach and sweeping velocity criteria for the MIS will be evaluated in the next phase of design.

Steep slope modeling utilizing CFD software Flow3D resulted in similar velocities as predicted with 1D modeling approach. Flow depth was greater than the 1D evaluations accounting for air entrainment and flow bulking due to the turbulence of the flow as it moves down the steep slope and the interactions with non-operating horns. Preliminary velocity assumed for spiral curve transitions design of 85 fps match CFD predicted velocities. Preliminary velocity is outside criteria for high head dams and is expected to require extensive physical and numerical modeling.

The elevated velocities within the full flow bypass are above the 50 ft/s threshold as identified within section 3.3.4. The Corps believes fish passage will be safe even at velocities above 50 ft/s in the full flow and primary bypass if the flow is turned and decelerated to acceptable conditions in the horizontal plane prior to discharging into the river. The biological testing at Green Peter included conditions where velocities exceeded 50ft/s in the steep slope pipe. Flows were allowed to decelerate within the horizontal section of pipe below recommend outfall criteria prior to exit into the river and the resulting fish survival was between 98-99%. Velocities comparable to that of the full flow bypass but with significantly higher deceleration rates are also documented on spillways with historically high survival rates (98% to 100%) when operated at similar unit discharges.

The CFD predicted the base of the full flow bypass air demand at 400 cfs compared to the 765 cfs based on conservative design guidance. Pressure change and strain rate evaluations (Appendix B-1 and B-2) indicate the steep slope environment should not contain conditions resulting in fish injury for either the primary or full flow sections.

Table 3-3. Upstream CFD Output Flow and Gate Settings

Upstream CFD Output							Top Horn			Bottom Horn		
#	FB Elevation	Collector Flow	Top horn #	Bottom horn #	Top horn Flow	Bottom horn Flow	Fish Pipe Flow	Bypass Flow	Gate Setting	Fish Pipe Flow	Bypass Flow	Gate Setting
	(ft)	(cfs)	(#)	(#)	(cfs)	(cfs)	(cfs)	(cfs)	(ft)	(cfs)	(cfs)	(ft)
1	1167	955.0	5	4	565.8	389.2	24.6	541.2	5.9	47.3	341.9	2.1
1b	1167	1184.4	5	4	616.1	568.3	28.8	587.3	6.3	55.5	512.8	3.4
3	1142	701.5	3	2	347.0	354.5	52.4	294.6	1.9	70.3	284.2	1.4
7	1166	1205.1	4	3	608.7	596.4	54.6	554.1	3.7	72.2	524.2	2.8

Table 3-4. Upstream CFD Discharge Coefficients and Driving Head

	Cd (calc)				Driving Head			
#	Top SSB	Top EB	Bottom SSB	Bottom EB	Top SSB	Top EB	Bottom SSB	Bottom EB
					ft	ft	ft	ft
1	0.77	0.73	0.77	0.81	8.15	15.3	30.15	39.2
1b	0.90	0.75	0.90	0.76	8.15	15.1	30.15	38.55
3	0.90	0.80	0.90	0.83	27.15	36.3	49.15	58.55
7	0.90	0.76	0.90	0.75	29.15	37.4	51.15	59.85

4. Surveying, Mapping, and Geospatial Data

4.1. Coordinate System and Datums

Horizontal: State Plane Washington North Zone, NAD27 US FT.

Vertical: NGVD29, US FT.

4.2. LiDAR

Topography used is mostly from AERO-METRIC LiDAR (Summary Report dated April 19,2010) data acquisition collected 03 December 2009. Aero-Metric in Seattle compiled limited 1”=40’ scale planimetric information and ties to existing mapping using the COE standards and feature details. Topographic data including DTM details and contours were later generated from the acquired LiDAR data and tied to existing mapping.

4.3. Mapping

Topographic information withing the existing excavation is mapped at 1”=50'. These mapping is compiled from aerial photography flown 19 July 1999 and supplemented by field survey performed June and July 1999. Bathymetry and Field Survey performed by DEA, Inc. January 2000. Topography near the seawall was performed by APS Survey & Mapping, April 2007, and Topography at the Administration building was performed by DEA, Inc, April 2008.

5. Geotechnical Design

5.1. Geotechnical Design Criteria

USACE Technical Design Criteria include the following:

- EM 1110-1-1804, Geotechnical Investigations
- EM 1110-1-2907, Rock Reinforcement
- EM 1110-1-2908, Rock Foundations
- EM 1110-2-1914, Design, Construction, and Maintenance of Relief Wells
- EM 1110-2-2100, Stability Analysis of Concrete Structures
- EM 1110-2-2502, Engineering and Design - Retaining and Flood Walls
- EM 1110-2-2901, Tunnels and Shafts in Rock
- EM 1110-2-3506, Grouting Technology
- EM 1110-2-3800, Engineering and Design Blasting for Rock Excavations
- EM 1110-2-4300, Instrumentation for Concrete Structures
- ER 1110-1-8100, Laboratory Investigations and Testing
- ER 1110-2-1806, Earthquake Design and Evaluation of Civil Works Projects

5.2. Regional and Site Geology

The dam spans a narrow rock canyon located 4 miles inside the western margin of the Cascade Range. The Cascade Range in this part of Washington is largely composed of a complex assemblage of lava flows, pyroclastic deposits, and fluvial sedimentary deposits, with lesser amounts of intrusive igneous rocks (Figure 5-1). These rocks, most of which were deposited during the upper Eocene to Miocene (10 to 40 million years ago), were uplifted in Pliocene time (5 million years ago) to form the Cascade Range. This uplift was accompanied by Pliocene and Pleistocene (1 million years ago) volcanism that formed the major Cascade volcanoes such as Mt. Rainier and Mt. St. Helens. The project site is underlain by bedrock composed of a series of Tertiary age volcanic rocks, locally known as Eagle Gorge andesite and regionally correlating with the Ohanapecosh Formation of early Miocene age. The regional dip of the bedrock is roughly 35 degrees southeast.

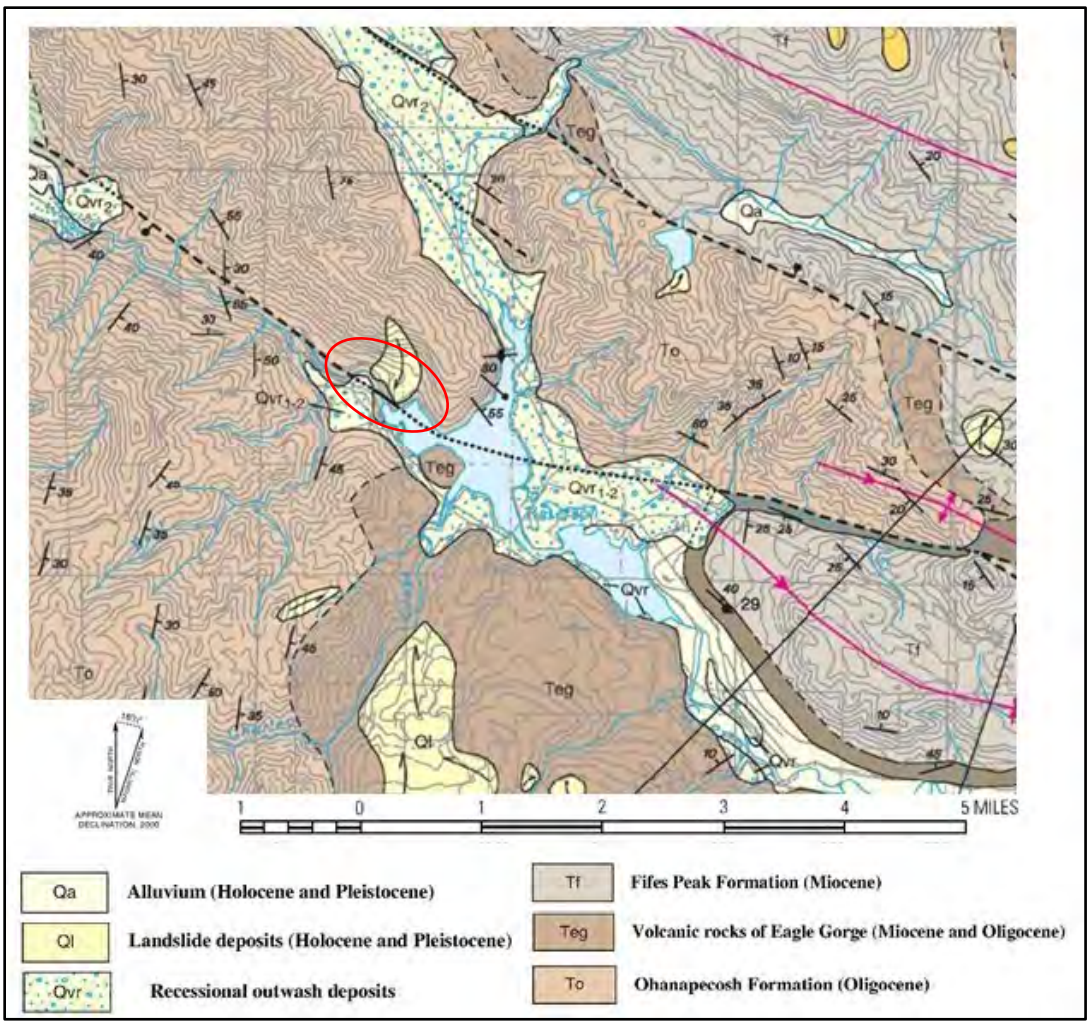

Figure 5-1: Regional geology.

During the Pleistocene, the Puget Lobe of the Fraser continental glacial ice sheet extended south into Puget Sound. Portions of this ice sheet extended east into the valleys along the west slope of the Cascade Range. Within the North Fork of the Green River valley, the ice and associated glacial deposits (moraine and glaciolacustrine) diverted the proto-Green River from the North Fork valley drainage to the southwest, into its present course, where it emerges from the Cascade Mountain front south of the North Fork valley. The diverted river flowed on a bedrock surface at approximate elevation 1,000-feet in the vicinity of the dam site. This ancestral channel is buried under fluvial, glacial, lacustrine, and rockslide deposits that make up the right abutment of HAHD. Interbedded fluvial and glacial outwash deposits overlie bedrock at the center of the ancestral valley and suggest a history of erosion and deposition common to these environments. Lacustrine deposits, which overlie the fluvial and glacial outwash sediments, were deposited during glacial period(s) when ice and debris dammed the Green River and created glacial lake(s). Figure 5-2 shows the location of the ancestral and pre-dam river channels with respect to the proposed facility. All features are contained within bedrock on the left abutment of the dam and are not impacted by the geologic conditions associated with the ancestral river channel at the right abutment.

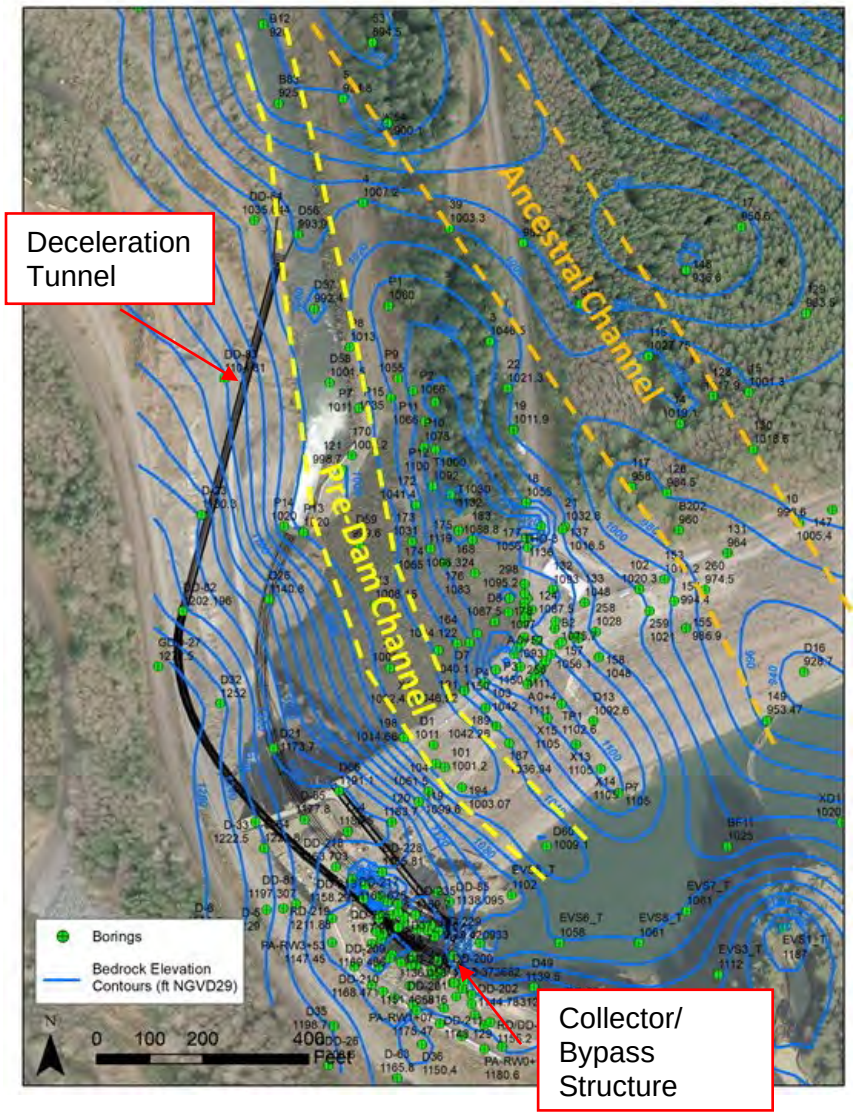

Figure 5-2: Top of rock contour map showing historical river channels and proposed facility.

The foundation rock of the dam is composed of volcanic rocks that have been faulted, sheared and hydrothermally altered. The bedrock is considered almost completely heterogeneous in which little definite structural or stratigraphic pattern is observed (USACE 1963). The main rock types identified at the project during dam construction were basalt, andesite, basaltic pyroclastics, andesitic pyroclastics, and felsite. The locations of these rock types identified during dam construction geologic mapping are shown on Figure 5-3. A summary of the engineering characteristics (shown on Figure 5-4) demonstrate the variability of rock properties encountered at the site ranging from soft to hard and very resistant to highly susceptible to weathering.

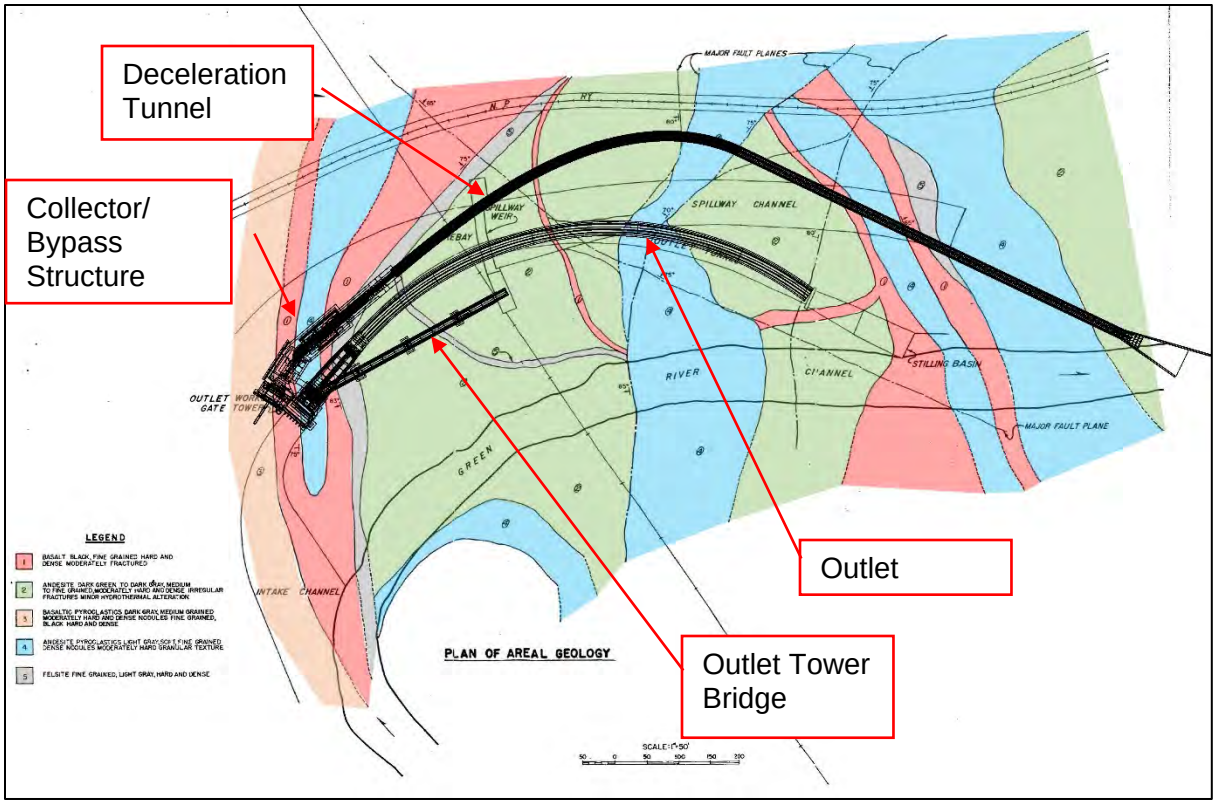

Figure 5-3: Mapped bedrock geology with proposed fish passage structure and outlet tunnel (USACE 1963). Legend (descriptions in Figure 5-4): Red (1) = Basalt; Green (2) = Andesite; Orange (3) = Basaltic Pyroclastics; Blue (4) = Andesite Pyroclastics; Gray (5) = Felsite]

Rock Type	Description	Weather Characteristics In-Situ	Characteristics of Shot Rock	Specific Gravity Bulk Dry	Wet-Moist Test*		Freeze-Thaw Test		$MgSO_4$ Test		Absorption Test
					% Loss	Cycles	% Loss	Cycles	% Loss	Cycles	% Loss
1. Basalt	Hard and dense, Fine grained, Conchoidal Fracture, Color black, No Alteration	Very Resistant	Blocky and durable	2.60 to 2.65	0.1 0.2	15 25	0.2 0.4 1.1	15 50 100	1.0	5	1.7
2. Andesite	Moderately hard and dense, Medium to fine grained, Irregular fracture, Color dark green to dark gray, Slight hydrothermal alteration	Resistant to normal atmospheric weathering	Massive Disintegrates adjacent to shear	2.50 to 2.60	0.4 0.4	15 25	3.3 6.1 20.4	15 50 100	12.5	5	2.5
3. Basaltic Pyroclastics (Tuff)	Matrix, Moderately hard and dense, Medium grained, Color dark grey Nodules, Hard and dense, Fine grained, Color black Hydrothermally altered	Matrix, Susceptible to mechanical breakdown Nodules, Resistant	Breaks fine to granular particles which weather to a sandy gritty mass	2.30 to 2.35	1.7 1.9	15 25	**		9.8	5	**
4. Andesite Pyroclastics (Tuff)	Matrix, Soft, Color light gray, Uniform fine grained and dense Nodules, Moderately hard, Variable granular texture, Hydrothermally altered	Very susceptible to atmospheric weathering, abrasion, and mechanical breakdown	Breaks fine to silty clayey mass with larger particles weathering readily to silty clay. Breaks to plastic mud under construction equipment.	2.25 to 2.33	1.5 3.3	15 25	64.4 ** 92.3	15 50	19	5	6.4 ** 7.6
5. Felsite	Light Gray, Hard and dense, Fine grained, Irregular fracture, Small feldspar phenocrysts	Very resistant	Durable and blocky	No tests were conducted on this material.							

* Wet-Moist Test. Cycle for test was from a saturated condition to a slightly moist condition.
** Samples were a composite of Basaltic and Andesitic Pyroclastics.
Results of standard Wet-Dry test on composite sample of all four rock types.

Wet Dry Test	
% Loss	Cycles
21.9	15
31.4	25

Figure 5-4: Bedrock engineering properties (Table 1, USACE 1963)

At the left abutment/bank, where the facility will be constructed, foundation rock as described during construction was variable, changing over a limited area from a soft, poorly indurated mass to hard, dense zones. Fracturing occurred in varying degrees, but

the majority of the abutment rock was described as moderately fractured in the foundation report (USACE 1963). Fault zones found in the forebay, spillway channel, and outlet works tunnel were also exposed in the left abutment. Gouge material was present in many of the fault planes while weathering and alteration was noted along the fault zones. Surficial weathering is currently evident along the rock ridge and slope between the spillway chute and stilling basin as well as along the downstream left bank.

In the vicinity of the current excavation, where extensive bedrock exploration has occurred, the bedrock is composed of andesite and basaltic andesite flows, pyroclastic flows, tuffs, and breccias with acidic dikes and sills. Few structural and stratigraphic patterns exist in this vicinity due to the depositional environment of the volcanic rocks and subsequent intense faulting, shearing, and hydrothermal alteration of the bedrock. Flows and intrusions tend to be lightly to strongly altered, moderately hard to hard, of low to high compressive strength (2,000 to 20,000+ pounds per square inch [psi] UCS), and moderately to strongly fractured. Autobreccia textures are common within the andesitic flows and entirely absent in the basaltic intrusions.

For the 95% design, bedrock was differentiated into three informal units based on their engineering characteristics: andesite, pyroclastite, and basaltic andesite. Descriptions of these three units are discussed below. Percentages are based on the rock types encountered during explorations for the existing excavation. Correlations to the 1963 Foundation Report bedrock types are presented in parentheses.

- Andesite (Andesite and Felsite): The Andesite unit is comprised of aphanitic and porphyritic flows and hypabyssal intrusions of intermediate composition. The unit is largely unweathered, of moderate strength, moderately hard to hard, dense, and light to dark gray to dark green. Autobreccia textures are commonly (greater than 50 percent by volume) displayed within the unit. Primary discontinuities are limited to occasional flow banding which does not affect unit stability. Secondary discontinuities are limited to the moderately abundant to abundant fractures.
- Pyroclastite (Basaltic and Andesitic Pyroclastics): The Pyroclastite unit is comprised of basaltic andesite to andesite pyroclastic deposits (tuffs, lapilli tuffs, and tuff breccias). Deposits are dark gray to light gray to buff, soft to moderately hard, and of low to moderate strength. Weathering has strongly impacted surface outcrops but has had little impact on subsurface rocks. The pervasive alteration present within the unit can be inferred as the reason for the unit's rapid deterioration upon exposure to the atmosphere. Discontinuities within the unit include primary depositional features and secondary structures. Primary features do not affect the unit's stability. Secondary fractures within the Pyroclastite unit share the same characteristics as the other units but are more difficult to discern due to the nature of the unit.
- Basaltic Andesite (Basalt): The Basaltic andesite unit is the youngest bedrock unit at the dam site. Occurrences of the unit are in the form of dikes, sills, and thin flows. Rocks within the unit are dark gray to black, of moderate to high strength, moderately hard to hard, dense, and blocky. Weathering is minimal and alteration is minimal to moderate. Discontinuities are limited to the abundant secondary fractures.

Orientations of discontinuities were measured in borings using geophysical techniques (i.e. borehole televiewer surveys) and along surface outcrops. A broad spectrum of discontinuity orientations were observed. Using only the statistically significant clusters of data points as shown on Figure 5-5, seven preferred joint orientations were selected and are listed on Table 5-1.

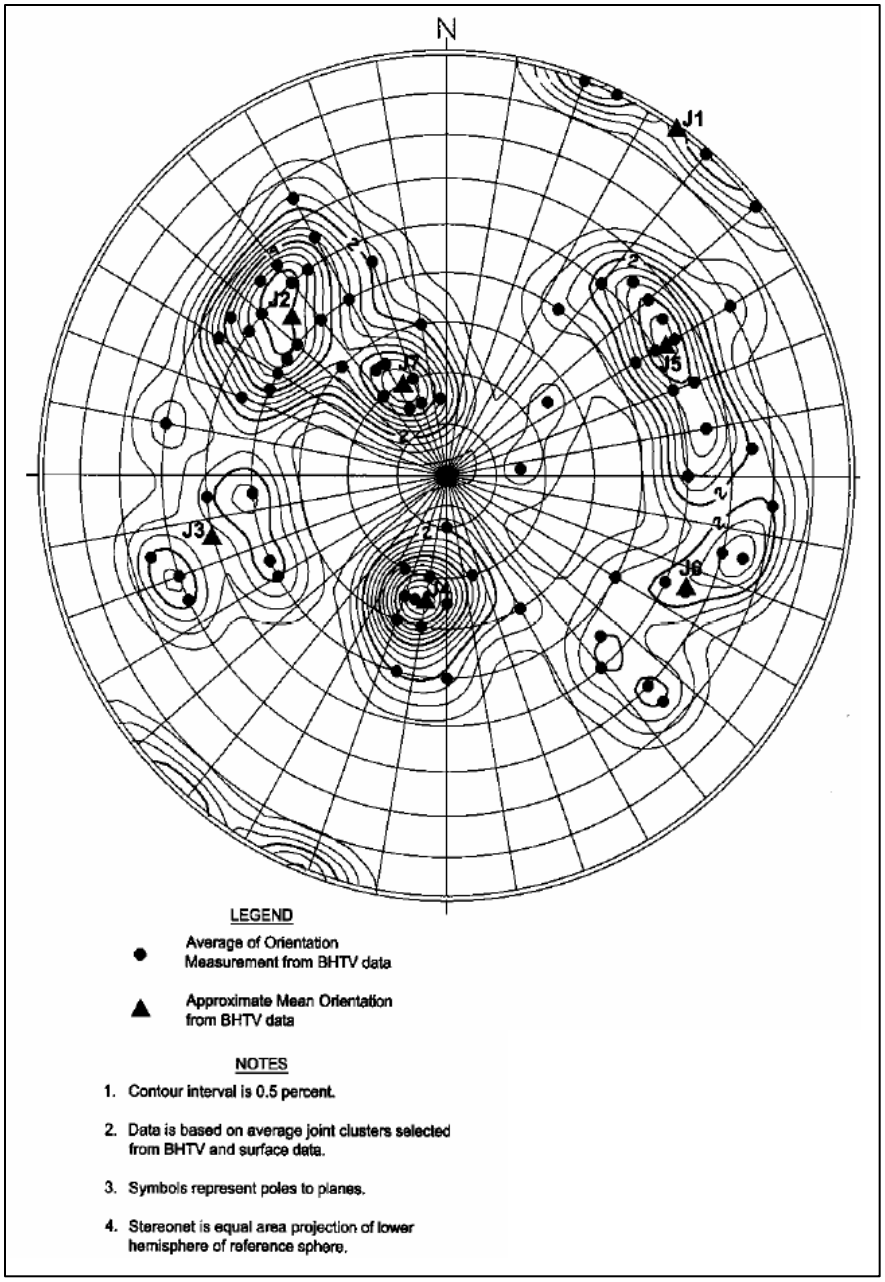

Figure 5-5. Average orientations measured in borehole televiewer survey (from 95% design GBR).

Table 5-1. Approximate preferred orientations of discontinuities from 95% design GBR.

Joint Set Designation	Dip Direction (degrees)	Dip (degrees)
J1	215	90
J2	135	45
J3	75	50
J4	10	25
J5	240	53
J6	295	55
J7	155	20

Secondary structures within all three bedrock units share common characteristics. Discontinuity spacing, as measured during excavation construction, ranged from 1 to 27 feet with the majority of spacing measurements falling within the 1 to 6 foot range (Figure). Apertures range from less than 0.1 millimeter to greater than 5.0 millimeter with some fractures healed or partially healed with calcite. Chlorite, calcite, and pyrite are the three most common fracture coatings. Slickenside fractures have been identified in all three units but are most common within the Basaltic Andesite unit. Additional details on the rock characteristics can be found in the 95% design GBR (see Appendix B-12).

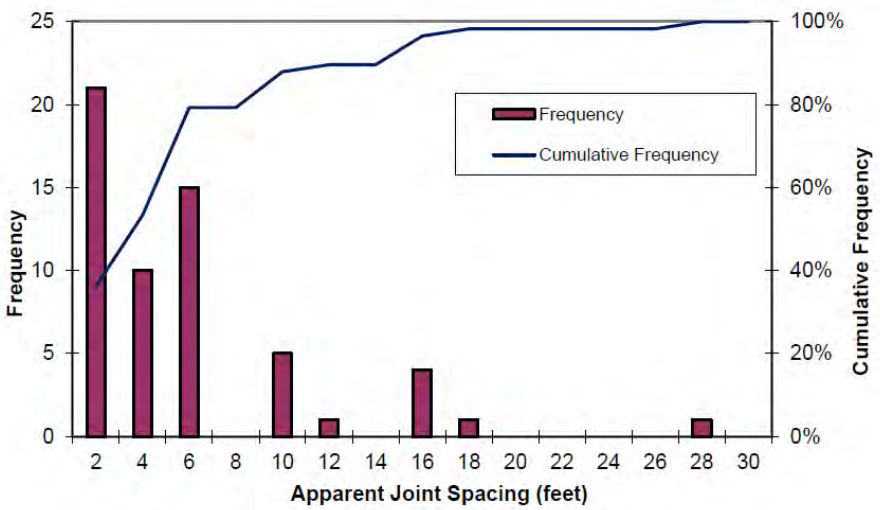

Figure 5-6. Histogram and cumulative frequency of discontinuity spacing (S&W, 2020).

5.3. Explorations

Explorations at HAHD includes those conducted prior to and during dam construction, for assessment of right abutment seepage issues, to support 95% design and subsequent studies. Only those explorations applicable to this design phase are discussed below.

Dam Construction

USACE conducted surface and subsurface investigations prior to and during dam construction including sixty-five borings, five observation wells, four test pits, and two adit excavations (Figure 5-7**Error! Reference source not found.**). Borelogs are provided in the HAHD foundation report (USACE 1963). Bedrock and other foundation materials exposed during construction were also observed and described in the foundation report.

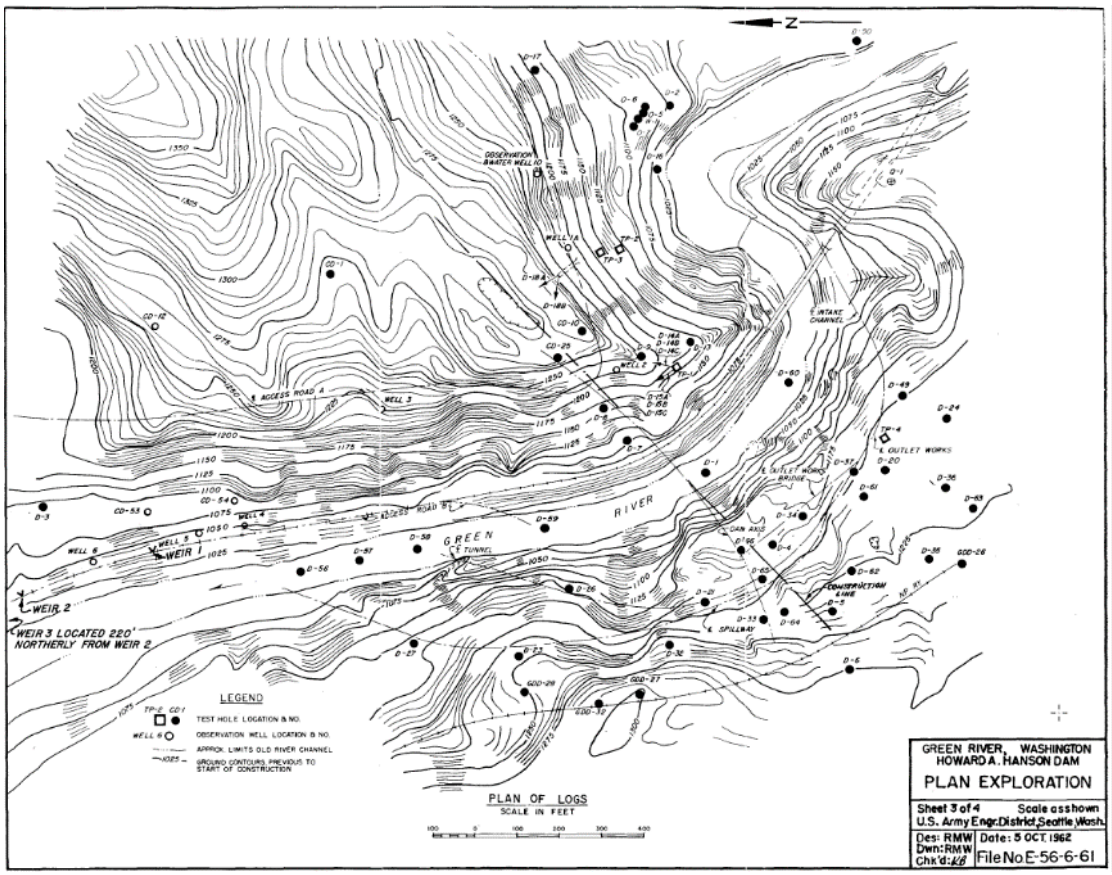

Figure 5-7: HAHD construction explorations

95% Design

Between 1994 and 2004, U.S. Army Corps of Engineers personnel conducted a series of exploration programs in support of the 95% design. These programs included field and laboratory based investigations. Field investigations included geologic mapping of surface outcrops, drilling and logging of approximately 60 borings (Figure 5-8), borehole packer and groundwater pumping tests, topographic and sediment bathymetry of the left abutment, excavation of four shallow test pits, and borehole geophysics. Acoustic televiewer, optical televiewer, caliper, temperature-fluid conductivity, heat-pulse flow meter, sonic profile surveys, and ground penetrating radar were the geophysical methods typically employed.

Rock descriptions based on these explorations are presented in Section 5.2 and parameters adopted for design are presented in Section 5.4. Borings and additional testing details can be found the in 95% design GBR (See Appendix B-12). Surficial geologic mapping was also completed during excavation and compiled in 2014 (S&W, 2014).

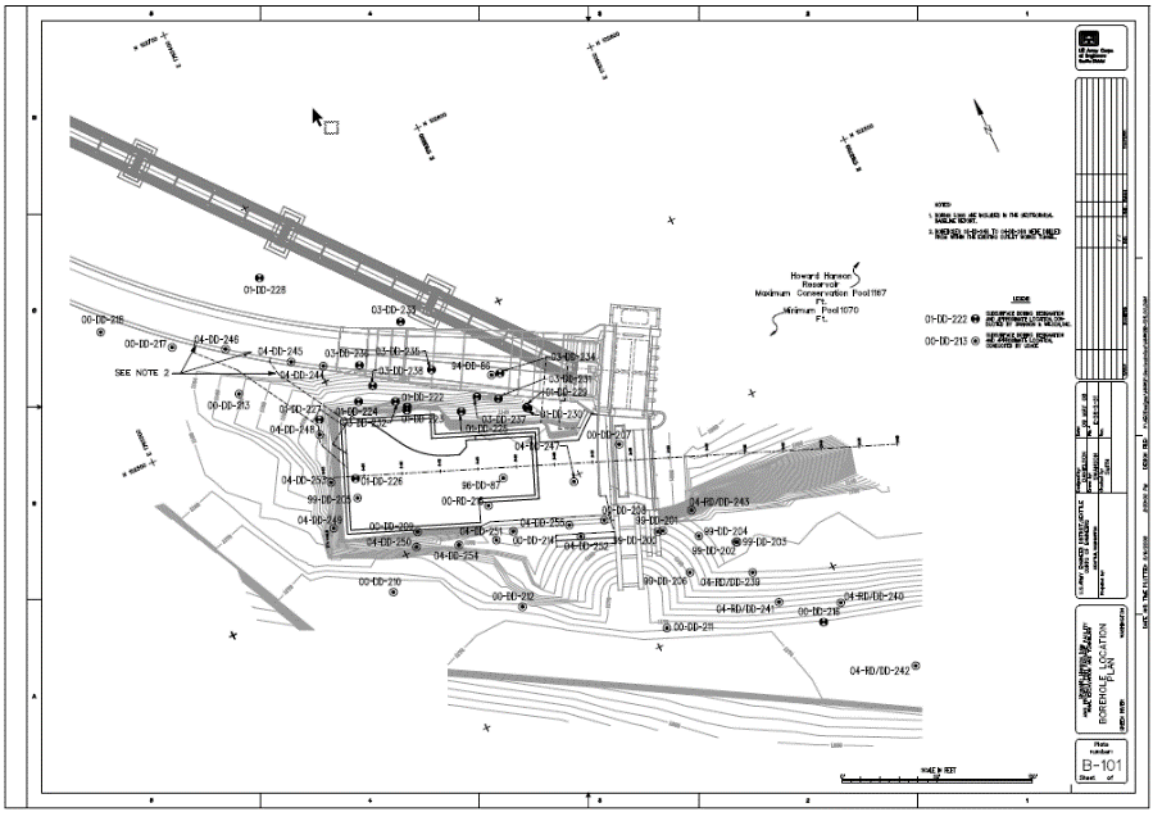

Figure 5-8. FPF construction explorations completed for 95% design

5.4. Selection of preliminary design parameters

Geotechnical design parameters for rock and soil were established in the 95% design GBR (see Appendix B-12) based on field testing, laboratory testing, and engineering judgment All data were collected from the area around the existing excavation as shown on Figure 5-8 and were used in the design of rock reinforcement for the 2008 95% design. Table 5-2 presents a summary of the geotechnical properties and Tables 5-2, 5-3 and 5-4 show the range. Additional explorations will be completed during PED and will be used to revise these geotechnical properties and rock reinforcement design.

Table 5-2. Summary of rock and soil geotechnical properties from the 95% design GBR.

Property	Andesite	Pyro-clastite	Basaltic Andesite	GP-GM Fill	GP-GM Native	ML Native
Spec. Gravity (bulk dry)	2.55[1]	2.30[1]	2.63[1]	--	--	--
Weight (dry, pcf)	--	--	--	125.0	133.0	100.0
Weight (moist, pcf)	170.6[1]	145.8[1]	164.8[1]	--	--	--
Unconfined Compr. Strength (psi)	7,363[1]	3,190[1]	8,140[1]	--	--	--
Shear Strength at 50 psi (psi/phi)	52/45[1]	33/20[1,3]	31/31[1]	--	--	--
Shear Strength (phi/c)	--	--	--	35°/0[2]	37°/0[2]	27°/100[2]
Tensile Strength (psi)	1,360[1]	--	--	--	--	--
Poisson's Ratio	0.266[1]	--	--	--	--	--
RQD (%)	85.4[1]	90.1[1]	67.8[1]	n/a	n/a	n/a
RMR	68.9[1]	65.7[1]	62.5[1]	n/a	n/a	n/a
Q	11.8[4]	21.4[4]	3.8[4]	n/a	n/a	n/a
Hydraulic Cond. (ft/day)	<2	<2	<2	--	--	--

[1] Average values – actual values my vary as much as 20 percent
[2] Estimated values based on material classification
[3] Test conducted at 45 psi vs 50 psi
[4] Geometric mean, not arithmetic mean
pcf – pounds per cubic foot
phi – internal angle of friction
psi – pounds per square inch
c – cohesion (in pounds per square foot)

Table 5-3. Andesite adopted rock properties from the 95% design GBR.

Property	Range	Average (One Std Deviation)
Specific Gravity (Bulk Dry)	2.50 to 2.60	
Moist Unit Weight (pcf)	136.1 to 205.1	
Unconfined Compressive Strength (psi)	2,230 to 27,130	7,363 (4,260)
Shear Strength at 50 psi Normal (psi/phi)	27/29 to 95/62	
Tensile Strength (psi)	413 to 2,540	1,360 (807)
Poisson's Ratio	0.0019 to 0.4325	0.2661 (0.0873)

pcf – pounds per cubic foot
phi – internal angle of friction
psi – pounds per square inch

Table 5-4. Pyroclastite adopted rock properties from the 95% design GBR.

Property	Range	Average (One Std Deviation)
Specific Gravity (Bulk Dry)	2.25 to 2.35	
Moist Unit Weight (pcf)	136.1 to 152.4	
Unconfined Compressive Strength (psi)	1,710 to 4,260	3,190 (1,072)
Shear Strength at 50 psi Normal (psi/phi)	33/23 to 34/16	
Poisson's Ratio	0.25 to 0.50	0.335 (0.101)

pcf – pounds per cubic foot
phi – internal angle of friction
psi – pounds per square inch

Table 5-5. Basaltic Andesite adopted rock properties from 95% design GBR.

Property	Range	Average (One Std Deviation)
Specific Gravity (Bulk Dry)	2.60 to 2.65	
Moist Unit Weight (pcf)	159.2 to 170.4	
Unconfined Compressive Strength (psi)	4,730 to 10,390	8,140 (3,003)
Shear Strength at 50 psi Normal (psi/phi)	31/31	
Tensile Strength (psi)	not available	

pcf – pounds per cubic foot
phi – internal angle of friction
psi – pounds per square inch

5.5. Recommended Instrumentation

A comprehensive instrumentation program was developed for the construction of the existing excavation to monitor existing structures and excavation stability. Structures of concern were the outlet tower, outlet tunnel liner, narrow rock pillar that supports the southern side of the existing outlet tunnel, easternmost bridge pier, and spillway. The outlet tower and bridge were seismically retrofitted in 1997 with additional retrofits for the cofferdam construction. At the tower, retrofits included reinforced-concrete buttress on the upstream side to provide additional strength, installation of vertical rods in the wingwalls, completion of an 1140 deck overlay, installation of horizontal members to stabilize the intake trashrack, and placement of mass structural concrete at the northeast corner. At the bridge, retrofits included an increase in the footing size, installation of reinforced-concrete shear panels between the bridge pier columns, and construction of a seismic restraint system for the bridge superstructure. Instrumentation was installed to monitor these features during excavation construction.

Instrumentation response values, or thresholds and limits, were developed along with response actions into an Existing Structures Protection Plan. All instrumentation was incorporated into an Automated Data Acquisition System (ADAS) to allow near real-time monitoring. Data were collected at regularly scheduled intervals, such as hourly, and dynamic readings (e.g. hundreds of readings per second) were collected during blasting to assess structural response.

Site plans showing existing instrument locations are shown in Figure 5-9 and Figure 5-10 and an example excavation section with instrumentation is shown on Figure 5-11. Instruments installed include the following:

- Crack/joint meters installed within the outlet tunnel, on the bridge Pier 3 footing, and in the tower.

- Vertical multipoint borehole extensometers (MPBXs) installed in the rock pillar along the north site of the FPF and near-horizontal MPBXs installed along the north, west and south walls to monitor rock deformation.
- Vertical inclinometer casings installed along the north, west and south sides of the excavation to monitor rock deformation.
- Liquid level systems installed around the base of the Bridge Pier 3 footing and the Gate Tower to measure vertical displacements and tilting of structures.
- Load cells placed on sacrificial rock dowels on the north wall of the excavation to measure the axial load transferred from the rock mass to the dowels.
- Piezometers installed around the excavation to measure the water level within the rock mass and to measure the effectiveness of dewatering methods.
- Strain gauges installed near the outlet tower trunnion gate and emergency bulkhead slots to measure strain changes on the concrete surface.
- Tiltmeters installed on the floor of the top room in the outlet tower to measure tilting of the structure.
- Geophones installed on the bridge pier, within the tunnel and on the outlet tower to measure blast induced vibration.

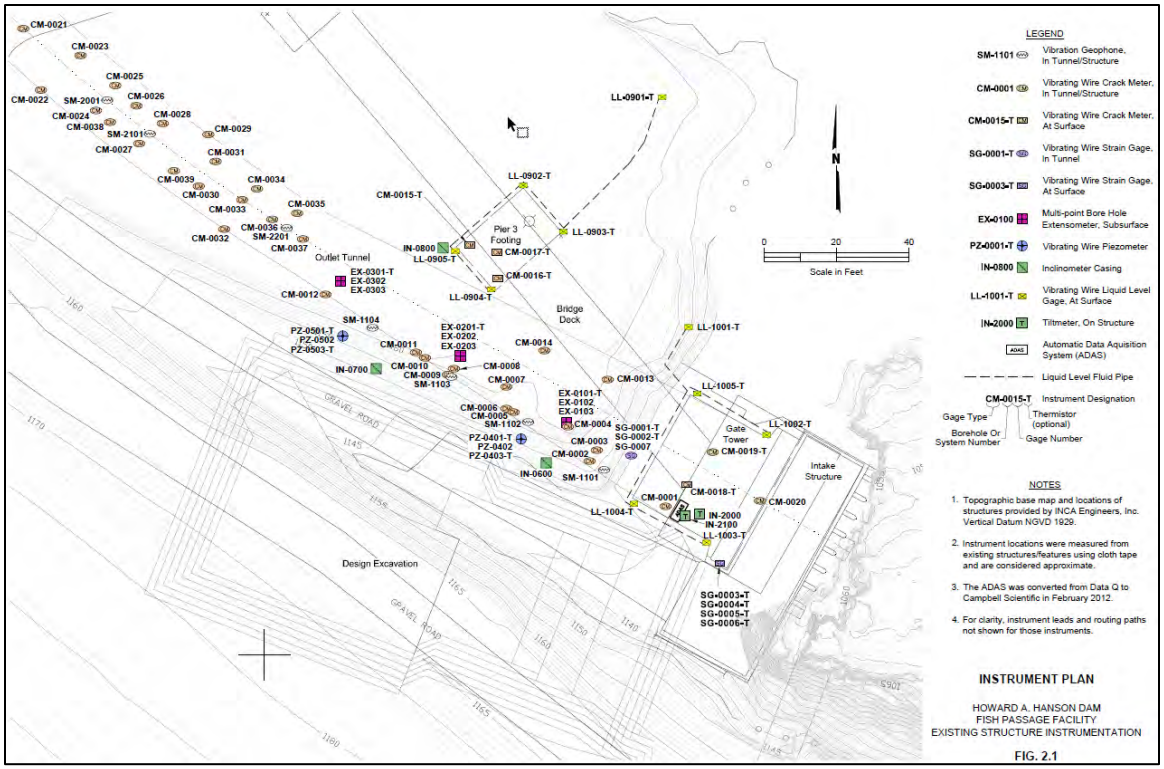

Figure 5-9: Instrumentation used to monitor existing structures.

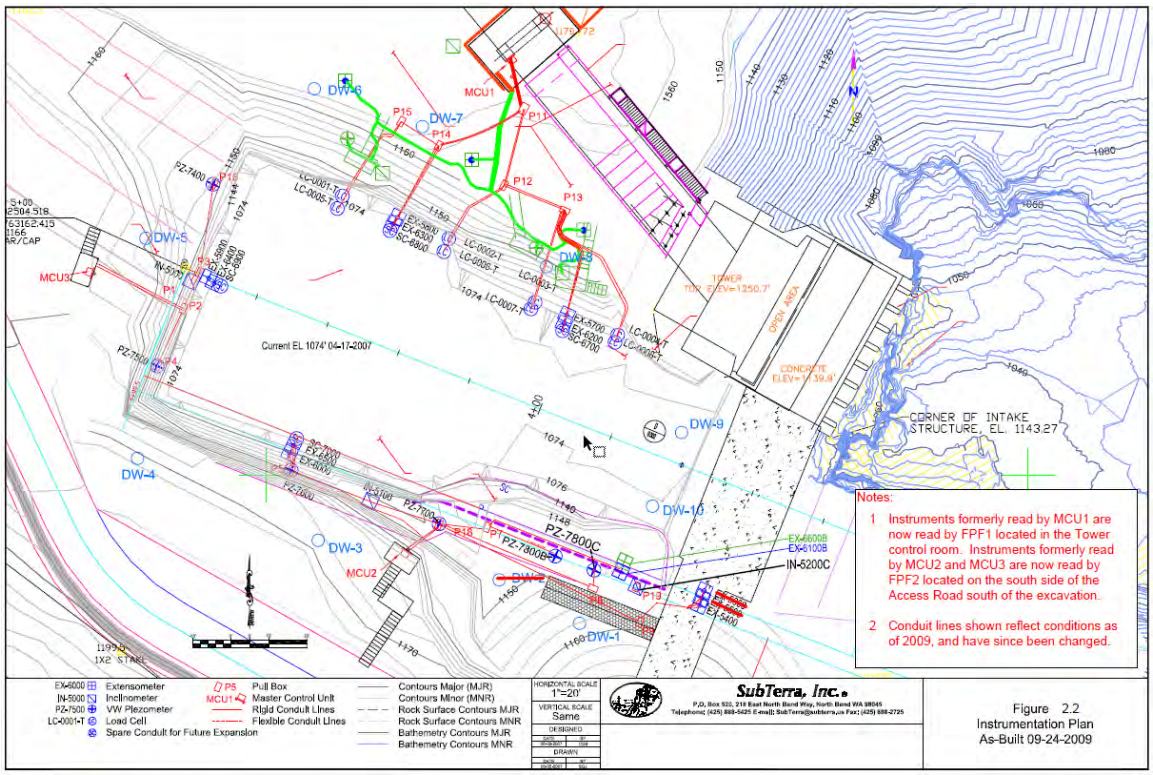

Figure 5-10: Instrumentation used to monitor excavation stability.

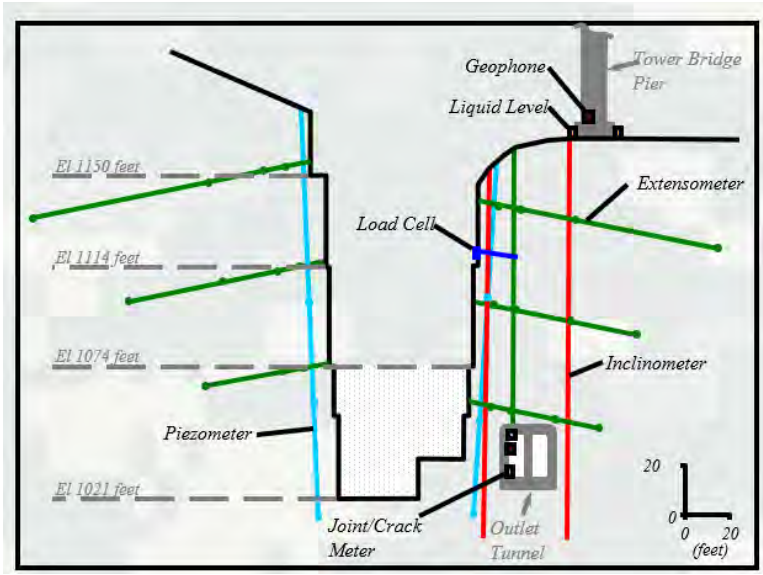

Figure 5-11: Example excavation section showing instrumentation.

Instrumentation has been continually monitored since construction work ceased in 2010 and will continue to be monitored through final construction. In 2020, Shannon & Wilson completed a comprehensive evaluation of the current instrumentation system which included repairs and re-evaluation of thresholds and limits for long-term monitoring.

As part of the new construction work, the excavation will be extended in the downstream direction. There will be a different narrow rock pillar adjacent to the south side of the outlet tunnel where the steep slope bypass connects to the deceleration tunnel. The deceleration tunnel will extend beneath the spillway piers, spillway channel, and railroad exiting downstream of the stilling basin. In addition to the structures of concern identified above, structure monitoring will be needed at additional areas of the outlet tunnel liner, the new rock pillar on the south side of the outlet tunnel, spillway piers, spillway channel, and stilling basin. Excavation stability monitoring will also need to be expanded to include the new areas of excavation.

A revised Existing Structures Protection Plan will be prepared detailing the monitoring schedule, thresholds and limits for new and existing instruments during construction. An instrumentation specialist and vibration specialist will be required during construction to develop monitoring plans, install new instrumentation, and provide monitoring and reporting during construction. Permanent instrumentation for monitoring the completed facility will be evaluated as the design progresses. The following will likely be included in the construction monitoring plan:

- Existing instrumentation
- Additional extensometers, inclinometers, piezometers and load cells to monitor excavation stability in new areas.
- Additional crack/joint meters in the outlet tunnel to monitor for tunnel liner stability.
- Additional strain gages near gates in outlet tower and spillway.
- Additional geophones or seismographs for blast vibration monitoring.
- Additional settlement monitoring at spillway and spillway channel.
- Pre- and post-blast inspection surveys.

5.6. Earthquake Studies

Fault Sources

The earthquake hazard at HAHD reflects its tectonic setting. The Pacific Northwest is at a collision boundary between two plates called the Cascadia Subduction Zone (CSZ), where the oceanic Juan de Fuca plate subducts beneath the North American plate. This zone lies offshore from southern British Columbia to northern California (Figure 5-12). The Juan de Fuca plate is being pushed northward causing clock-wise rotation in western Oregon, and north directed “crumpling” of the Washington region against a stable North America block in British Columbia. Because of this subduction process, the Pacific Northwest is vulnerable to earthquakes originating from three primary sources: shallow crustal earthquakes, Benioff (intraplate) earthquakes, and subduction zone earthquakes (Figure 5-13).

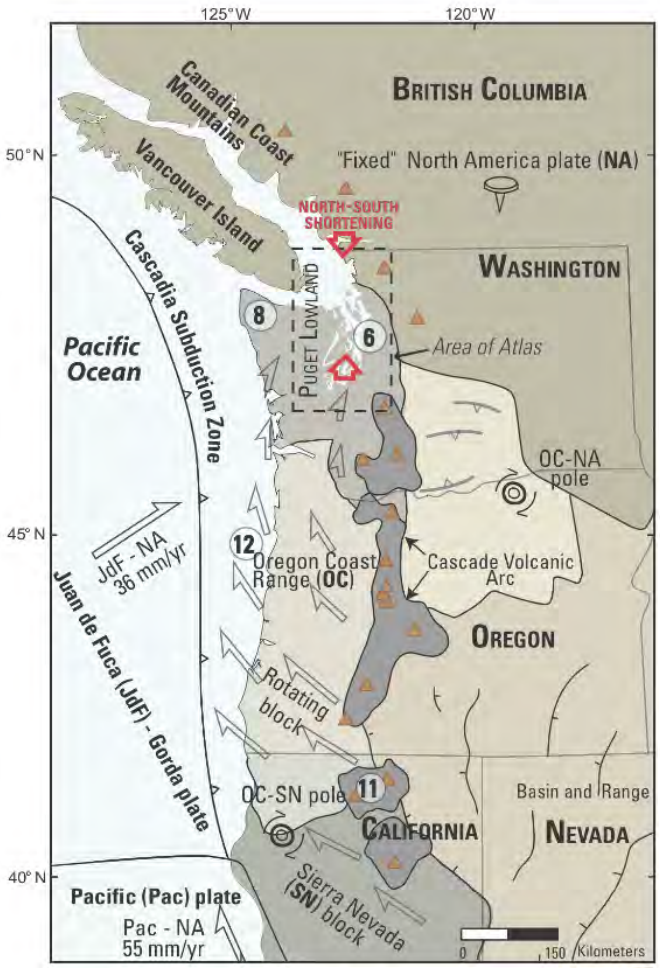

Figure 5-12: Extent of Cascadia Subduction Zone (Source: USGS Open File Report 2010-1149, Gray arrows indicate relative plate motion, block motion (circled numbers) is in mm/yr.)

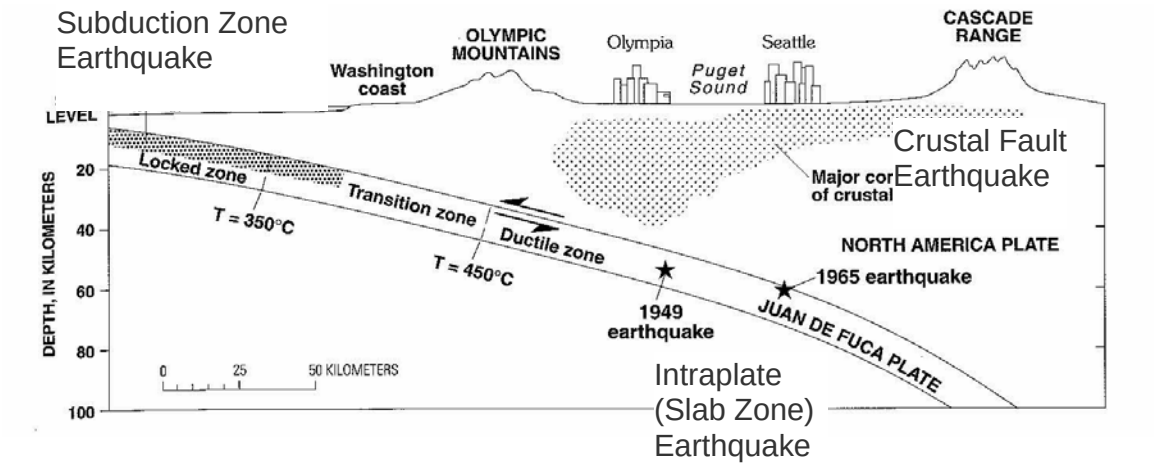

Figure 5-13: Schematic cross-section through Cascadia subduction zone (Source: Silva, et al., 1998)

Shallow Crustal Earthquakes occur within the top 20 miles of the Earth's surface as a result of north-south compression in westernmost Washington. It is accommodated in part by a system of east-west- and northwest-striking crustal faults crossing the Puget Lowland. Many of these faults have been active in Holocene time and are spatially and structurally associated with large structural basins and uplifts observable in gravity, magnetic, and seismic data. The closest of these identified active fault zones to HAHD is the Seattle Fault Zone (see Figure 5-14).

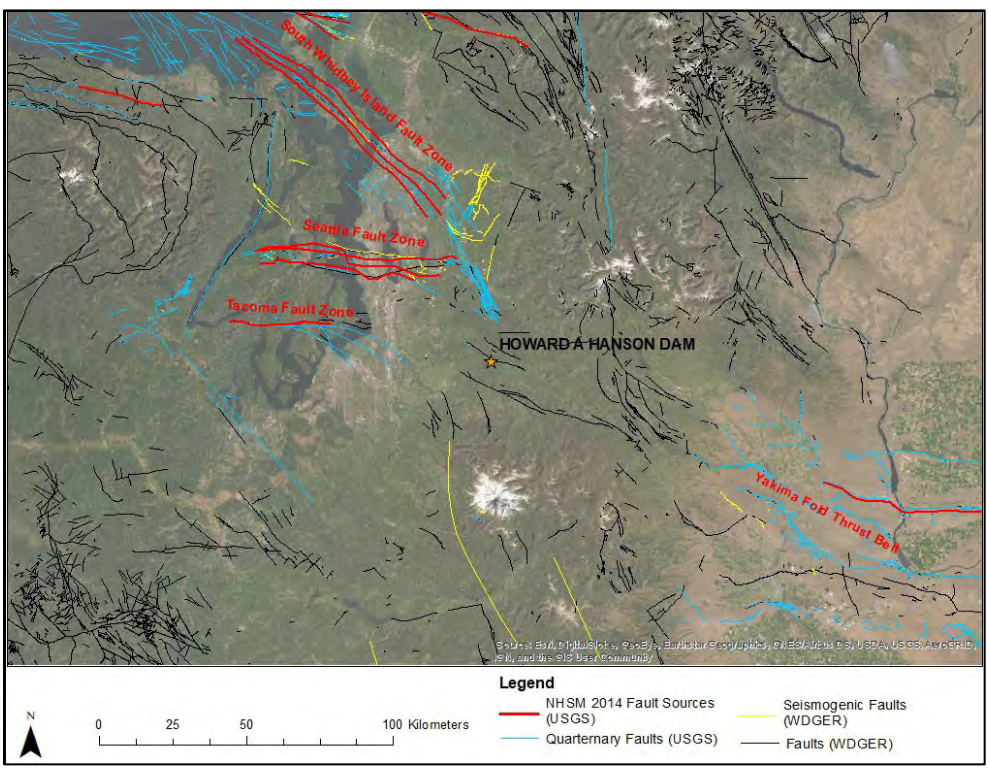

Figure 5-14: Location of fault sources near HAHD

Benioff Zone (Intraplate) Earthquakes occur within the subducting plate at depths of 15 to 60 miles. The largest events typically occur at depths of 25 to 40 miles. The largest of the recorded events is the M6.8 Olympia quake in 1949. Other significant Benioff zone

events include the M6.5 Seattle-Tacoma quake in 1965, the M5.8 Satsop quake in 1999, and the M6.8 Nisqually quake in 2001. Since 1900, there have been six Benioff Zone earthquakes in the Puget Sound basin with measured or estimated magnitude of 6 or larger. Scientists believe large earthquakes in this zone occur about once every 35 to 50 years.

Subduction Zone (Interplate) Earthquakes occur along the interface between the Juan de Fuca and North American plates. Scientists have found evidence of great-magnitude earthquakes along the CSZ with magnitude of 8 to 9 or greater. They have occurred at intervals as short as 100 years and as long as 1,100 years. The most recent of these great earthquakes struck the region on January 26, 1700. The magnitude 9 earthquake produced a tsunami that affected both the North American coast and Japan. Scientists currently estimate that a magnitude 9 earthquake along the northern margin of the CSZ occurs about once every 500 to 600 years.

Site Classification

The shear wave velocity (v_s) is the velocity that shear waves, such as those produced by an earthquake, will have as they pass through the soil or bedrock. For the purposes of estimating ground motions, the foundation soil and rock profile can be classified based on the average shear wave velocity in the uppermost 100 feet (30 meters, v_{s30}) of the site profile. The v_{s30} is currently the preferred parameter for characterizing (classifying) the site conditions in developing estimates of ground shaking using ground motion attenuation relationships.

The site v_{s30} was determined from available shear wave velocity measurements from investigations for the 95% design. Shear wave velocity measurements were collected from five borings at the excavation near the left abutment. All borings were within relatively good quality andesite rock (RMR class II). The average measured v_{s30} was in 6,475 ft/s (1974 m/s) which is classified as Site Class B, according to the National Earthquake Hazards Reduction Program (NEHRP).

Seismic Hazard

A local (site-specific) Probabilistic Seismic Hazard Analysis (PSHA) has not been performed for HAHD. The mean seismic hazard curve for the peak horizontal ground acceleration (PGA) and Site Class B was generated using the regional (USGS 2018) PSHA, as shown in Figure . There is considerable uncertainty for Annual Exceedance Probabilities (AEP) less than 1/10,000. The extrapolation of the mean hazard curve to remote AEP (i.e., less than 1/10,000 AEP) is shown as a dashed line in this figure. The PGA corresponding to selected common values of return periods were interpolated from this mean hazard curve and are shown in Table 5-66.

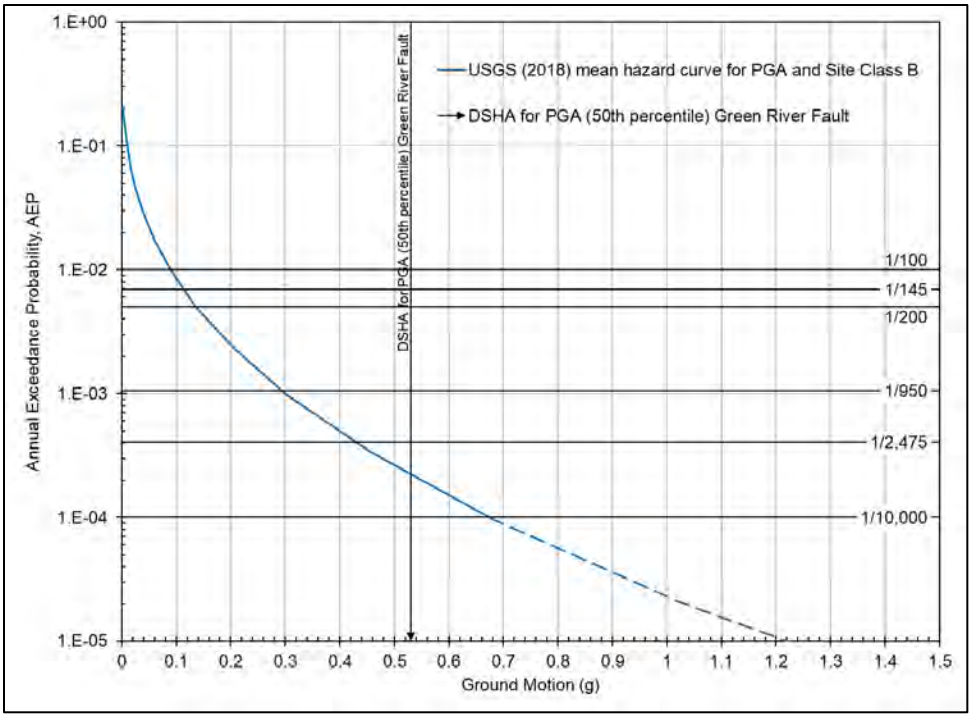

Figure 5-15: Seismic Hazard Curve for PGA (Site Class B)

Table 5-6. Peak Horizontal Ground Acceleration Summary (USGS 2018)

Earthquake	Return Period (years)	PGA Site Class B (g)
Operating basis earthquake (OBE)	145	0.113
Maximum design earthquake (MDE) for “non-critical” structures	950	0.294
IBC “maximum considered earthquake”	2,475	0.427
Intermediate earthquake	4,950	0.540
Long return period earthquake	10,000	0.674

Based on the PGAs presented in Table , the MDE and OBE PGAs have changed from the values used in the 95% design. The MDE PGA has increased from 0.25 g to 0.294 g, and the OBE PGA has decreased from 0.15 g to 0.113 g.

Deaggregations

The deaggregated seismic hazard for the PGA is shown in the following figures using the regional (USGS 2014) PSHA and average v_{s30}. Deaggregations were not available for USGS (2018) NSHM using the USGS’s Unified Hazard Tool; therefore, the deaggregations are based on the USGS (2014) NSHM but are not expected to significantly change. Site Class B (1,150 m/s) was used to perform the deaggregation and generate Figure 5-16. The deaggregation suggests that the primary contributors to the seismic hazard at the site include Pacific Northwest deep earthquakes (intraslab) and Puget Sound crustal earthquakes.

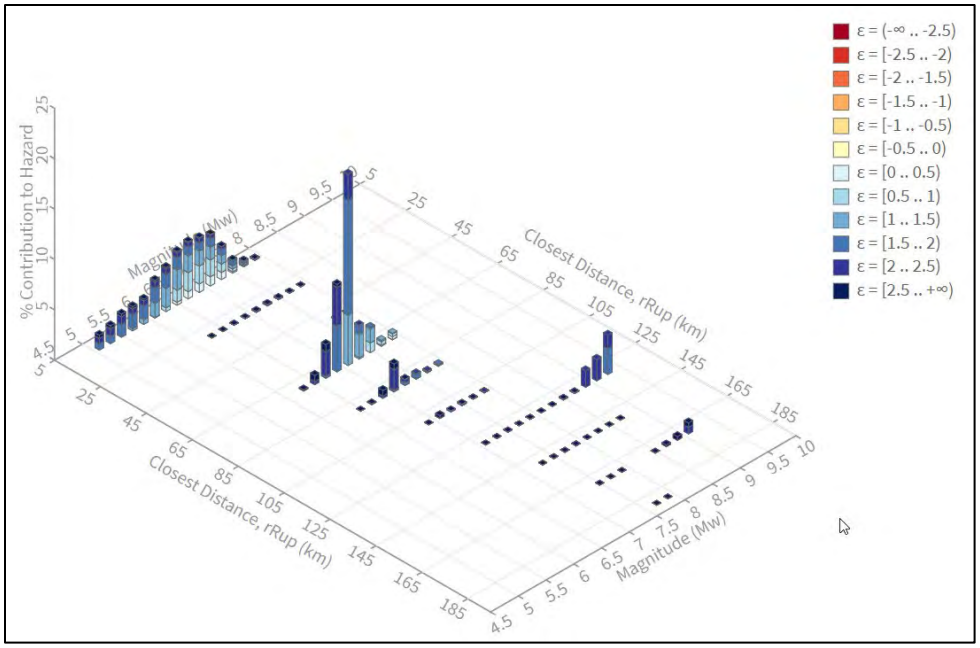

Figure 5-16: Probabilistic Seismic Hazard Deaggregation for PGA with 1/10,000 AEP (USGS 2014)

5.7. Foundation Design

The majority of structure foundations will be shallow foundations bearing on rock. Portions of the guide wall and roadway gabion walls may bear on native soil or compacted fill. The primary bypass will extend 200 feet downstream of the stilling basin through an elevated conduit. Drilled piers founded on rock may be required to support the elevated conduit and will be evaluated further during future design.

5.8. Rock Cut Slope Stability

Rock excavation will be required for the collector and bypass structure construction. The current excavation is at elevation 1,074 feet and will need to be deepened by about 20 feet to accommodate the collector facility. The excavation will need to be extended in the north-west direction (about 130 feet by 50 feet wide and a maximum depth of 140 feet) to accommodate the bypass structure. Rock excavation will also be required at the stilling basin and downstream tunnel portal.

Rock cut slope stabilization requirements were based on work completed for the existing excavation as discussed below. For this design phase, it is assumed that rock mass characteristics will be similar to those encountered during previous explorations and construction for all areas, including the downstream stilling basin. Additional rock mass characterization will be required in future design phases to further assess slope stability.

Rock cut slopes for the existing excavation were designed based on geotechnical investigations and analyses conducted by USACE and S&W (S&W 2004a, 2004b). The 2004 analysis concluded that plane shear, wedge sliding, and toppling rock mass failure modes were kinematically admissible on all slopes. It was also concluded that the slope stability would be structurally controlled and that the rock mass was neither so intensely fractured nor weak that failure through the intact rock mass was likely. Rock support was designed using the most critical failure mode, plane shear failure, using factor of safety of 2.0 for static loading conditions. The method used to select stabilization methods consisted of calculating the maximum bolt force required to stabilize the rock block assuming it was bounded by a joint dipping into the excavation and a tension crack.

Joint length was assumed to be 20 feet as most of the observed joints were less than 20 feet in length and portions of the excavation would be excavated in 20-foot high lifts.

The original analysis (S&W 2004a) was later re-evaluated after additional explorations were completed near the north excavation slope (S&W 2004b). The revised analysis included the presence of pyroclastic rocks and water filled joints along the north slope assuming the previously recommended stabilization. The minimum factor of safety was 1.4 and was considered acceptable for construction.

Final stabilization requirements were:

- No. 8, Grade 75 untensioned grouted dowels on a 6 foot x 6 foot pattern to prevent large block failures within the bulk of the excavation. Dowel lengths varied by maximum anticipated block depth (20 feet in the majority of the excavation and 30 feet on the western slope).
- 6 inches of fiber reinforced shotcrete to prevent raveling or slaking of the slope face.
- Weep holes installed on a 12 foot x 12 foot pattern to prevent the build-up of hydrostatic pressure behind the shotcrete.

In 2020, S&W re-evaluated the long-term stability of the existing excavation (S&W 2020). Stability analyses included static and earthquake loading conditions (pseudo-static) for global and rock block stability. The analysis concluded that the 2004 stabilization requirements met the stability criteria under static and pseudo-static seismic loading conditions, with the exception of the adverse groundwater condition in which the total head differential is greater than 20 feet (water pressure in rock mass greater than reservoir elevation). During future construction activities, dewatering will be required to reduce water pressures in the rock mass. Excavation lifts will also be limited to 10 feet to reduce the temporary unstable condition prior to installation of dowels and weep holes.

5.9. Outlet Tunnel Stability

The close proximity of the excavation and deceleration tunnel to the outlet tunnel will likely cause changes in the distribution of stresses in the rock mass surrounding the outlet tunnel. Outlet tunnel stabilization measures will likely be required for the area adjacent to the excavation and were based on work completed for the existing excavation as discussed below. Impacts to the outlet tunnel from construction of the deceleration tunnel will be evaluated during future design phases.

S&W completed an evaluation of the outlet tunnel and liner stability in 2004 (S&W 2004a, 2004b). It was thought that the excavation could impact the tunnel in the following manner:

- Overburden stresses in the rock mass could be redistributed such that additional load would be imposed on the existing tunnel liner.
- Overburden stresses in the rock mass would increase in the pillar of rock left between the tunnel lining and excavation.

Stresses would be redistributed around the periphery of the tunnel in a manner that could result in tensile stresses in the rock above the crown of the tunnel and in the slope.

A finite difference model, FLAC (Fast Lagrangian Analysis of Continua), was used to evaluate the effect of the excavation on the outlet tunnel at two tunnel cross-sections (A and B as shown in Figure 5-17). Only Section A is presented below as an example of the findings and to demonstrate stability issues at the outlet tunnel. A full description of the

modeling process can be found in the S&W report (S&W 2004a). The rock was modeled as a continuum and the model identified areas where tensile stresses could exist. In those areas, the loss of normal stresses across discontinuities could result in slope or separation of discontinuities and loosening of rock in the crown of the tunnel. The model determined that the tensile stresses for intact rock due to excavation were less than the laboratory derived tensile strength values. However, since the discontinuities have little to no tensile strength, block loosening would occur along discontinuities oriented perpendicular to the minor principal stress vectors. An example cross-section from the model is shown on Figure 5-17 and model results on Figure 5-18. Based on this analysis, S&W recommended rock dowels be installed from inside the outlet tunnel in the crown prior to excavation to mitigate for block loosening.

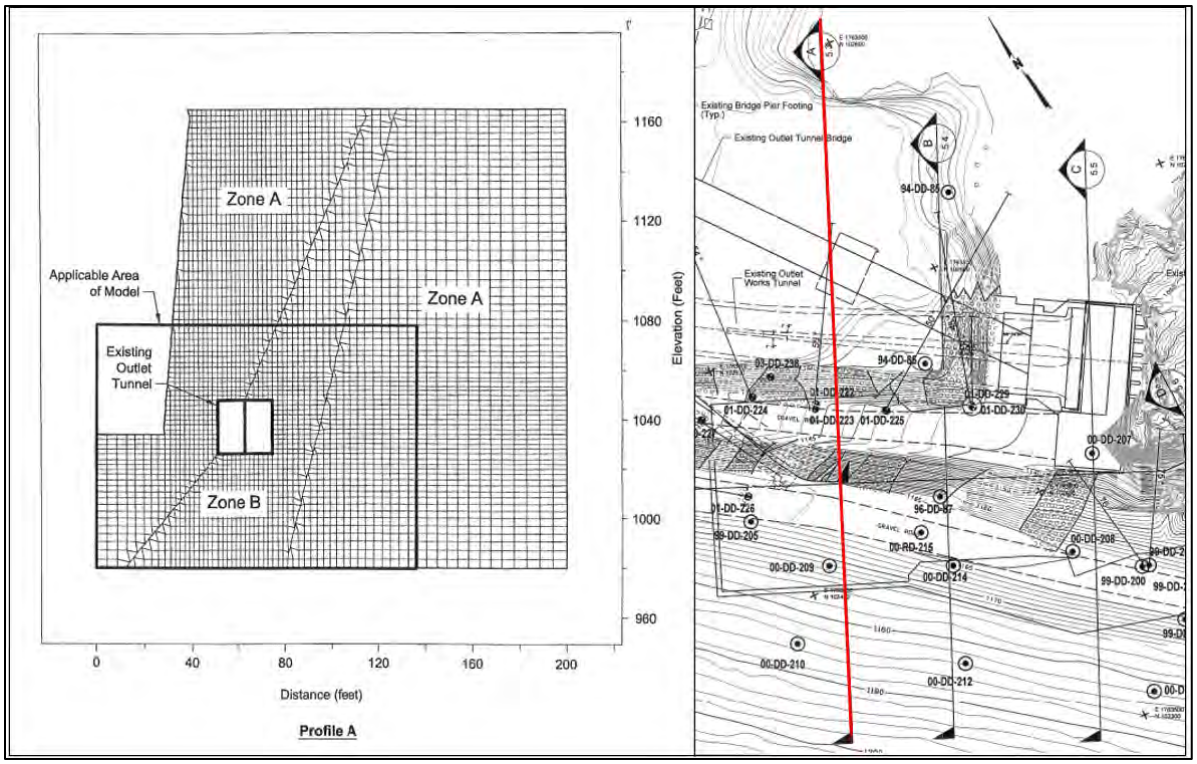

Figure 5-17: Example rock mass with outlet tunnel cross-section (Profile A) used in FLAC modeling.

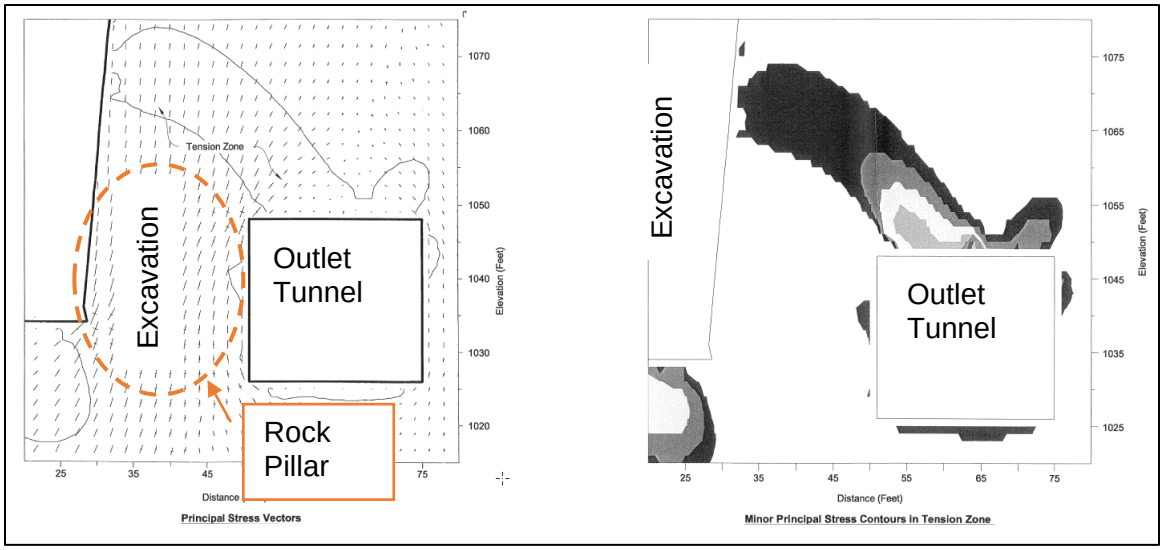

Figure 5-18: Example FLAC model results at Profile A showing tension zones around the outlet tunnel. Rock pillar area is shown on the left figure.

An example of the narrow column of rock remaining between the outlet tunnel and excavation, referred to as the 'rock pillar', is shown on Figure 5-18. Potential rock pillar failure modes include shear of the pillar through intact rock and sliding and separation along discontinuities in the rock mass (S&W 2004a). The first failure mode was checked by comparing the compressive stresses in the rock pillar to the compressive strength of the rock. FLAC model results indicated that induced stresses are 8 to 30 times less than the average unconfined compressive strength of the rock. S&W concluded that failure by crushing was unlikely. For the second failure mode, S&W used the single plane of weakness theory where the pillar is represented by a rectangular block with a single planar joint that completely passes through the block or pillar. Maximum and minor principal stresses were estimated using this theory and compared to values in the FLAC model. S&W found that slip along a discontinuity was plausible for one of the two tunnel sections evaluated. Based on this analysis, S&W recommended rock dowels be installed from inside the outlet tunnel prior to excavation in the south wall to mitigate for rock pillar failure.

S&W later re-evaluated the rock pillar analysis after additional geotechnical explorations found more extensive areas of pyroclastic rock (S&W 2004b). S&W determined that rock bolts would not adequately prevent slip in the pyroclastic rock and alternative stabilization methods were recommended. In 2008, S&W finalized the rock pillar analysis based on the construction occurring at the time and latest facility design changes. Limit equilibrium analyses were used to assess potential rock wedges sliding under static dry conditions, with water pressures acting along discontinuities, and seismic forces (0.35g). A FLAC model was used to assess the stability of the tunnel. Similar to the initial analysis, rock pillar failure in shear was the most likely failure mode. S&W recommended drilled shafts into the rock pillar from the bottom of the excavation along with grouting the rock mass to fill open joints to further reduce deformation and improve the structural integrity of the rock pillar. See example sections on Figure 5-19 for drilled pile and grout hole configurations. As noted determined the construction, very little grout was taken during the grouting program indicating the rock mass was tight.

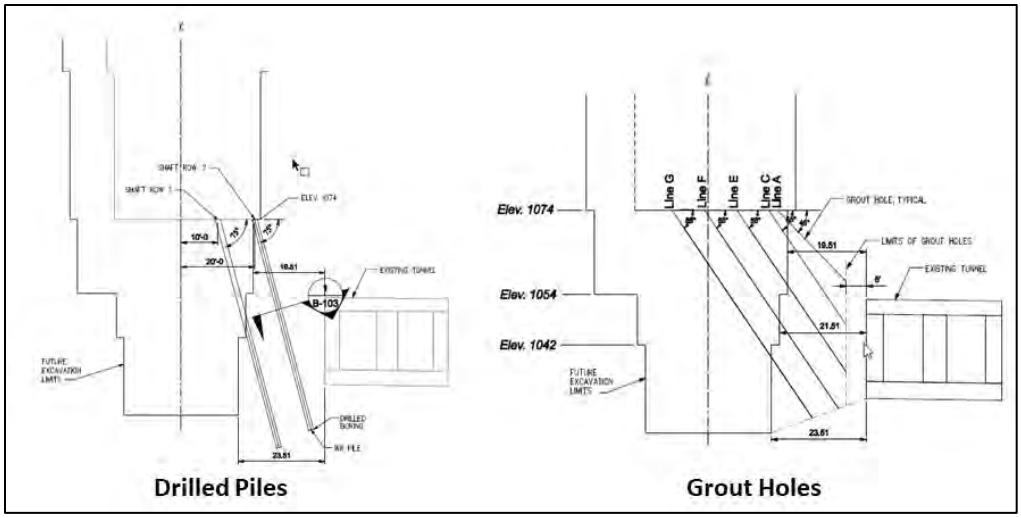

Figure 5-19: Example sections showing drilled piles and grout holes for the rock pillar stabilization.

Rock reinforcement installed for outlet tunnel stability ultimately included:

- Rock dowels installed from inside the outlet tunnel in the split section to tunnel station 16+36 in 2003 and then continued to station 17+22 in 2006. Dowels installed were No 9 or 11, grade 75 untensioned rock bolts, 25 feet long, 4 feet center to center.
- Drilled piles installed in the rock pillar consisting of W8X67 wide flange section installed in a 16-inch diameter hole
- Grouting rock mass in the rock pillar using downstage grouting methods.

The new portion of the excavation for the steep slope bypass could also impact the stability of the outlet tunnel by having a rock pillar remain between the excavation and outlet tunnel. Failure modes will be similar to those considered previously but will occur further west in the excavation (see Figure 5-20 and Figure 5-21). For this design phase, rock reinforcement is assumed to be similar to the existing excavation design. Rock dowels will be installed in the outlet tunnel crown for an additional 50 feet and drilled piles and grouting of the rock mass in the rock pillar will be needed for an additional 110 feet. For costing purposes, the quantities needed for the additional rock mass grouting and drilled piles are assumed to be similar to the 2007 rock pillar contract work. Additional analysis will be completed in future design phases to determine the full impact of the rock pillar on the outlet tunnel stability and required mitigation measures.

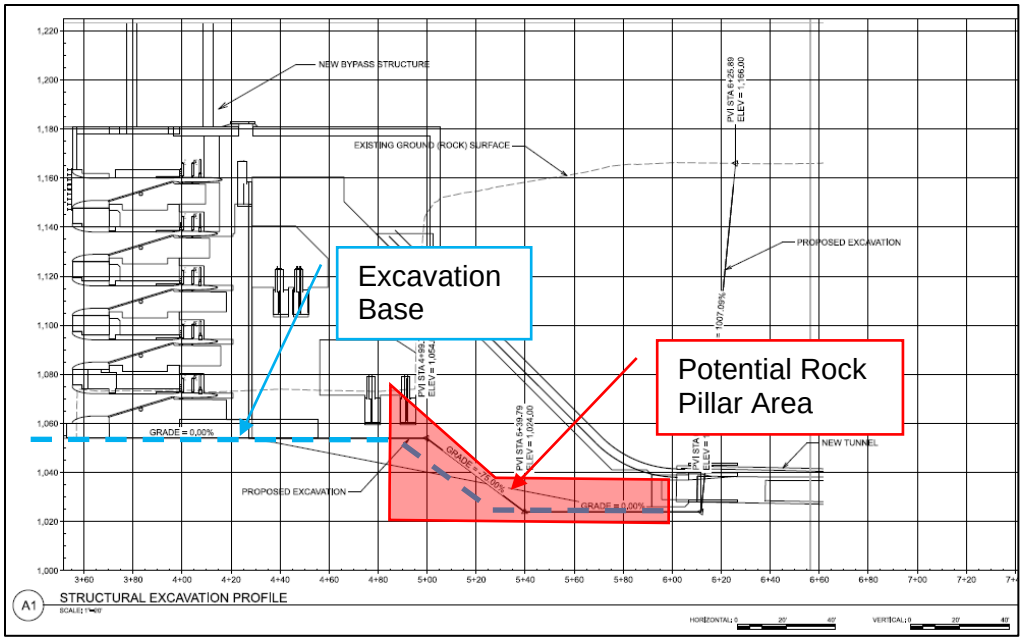

Figure 5-20: Excavation profile showing potential rock pillar area requiring stabilization.

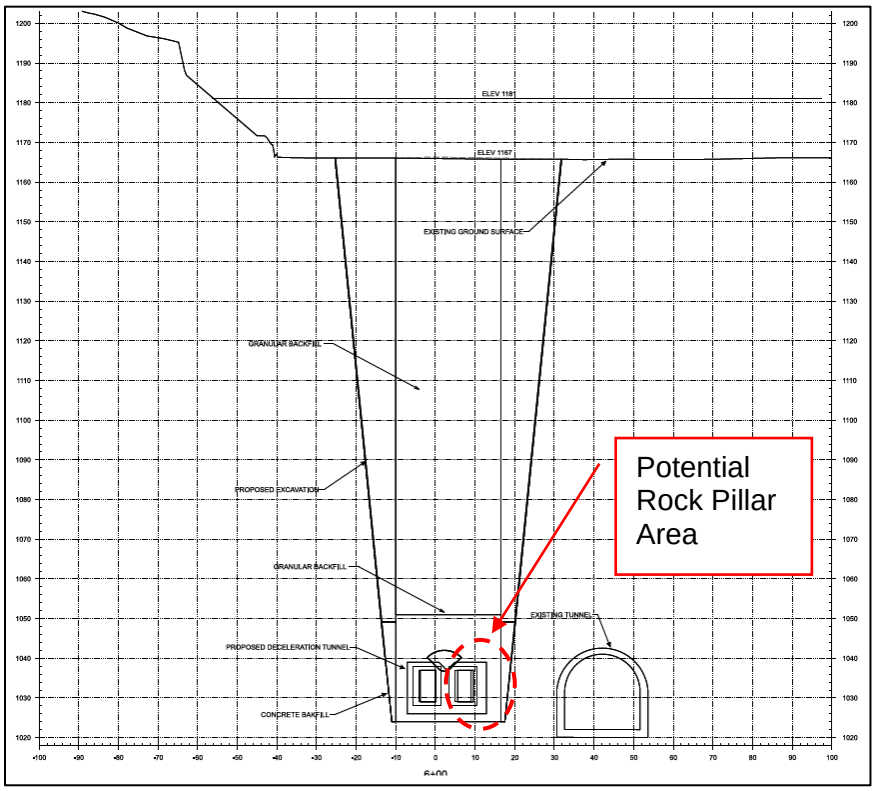

Figure 5-21: Excavation section at 6+00 showing potential rock pillar area.

5.10. Deceleration Tunnel Stability

The proposed deceleration tunnel extends about 1,225 feet from the end of the bypass excavation to the stilling basin. The tunnel is anticipated to pass through all types of volcanic rocks identified during dam construction, varying from soft to hard and very resistant to highly susceptible to weathering (see **Error! Reference source not found.**5-19). Tunnel stability for this design phase was evaluated based on data

collected for the existing excavation and work completed for the 95% design. Explorations will be completed prior to further design to assess actual geologic conditions along the tunnel alignment.

The proposed deceleration tunnel stabilization requirements are based on the Attraction Water Conduit (AWC) tunnel design from the 95% design. Instability of the tunnel perimeter could result from minor and major structures, such as contacts between geology units or from discontinuities such as joints, shear zones and faults, that intersect the sidewall or crown of the tunnel to form kinematically permissible rock wedges. Based on the geologic mapping during dam construction, all of these minor or major structures could be encountered during tunnel construction.

Rock mass classification methods were used in the 95% design to determine the overall quality of the rock mass for engineering purposes. Rock Quality Designation (RQD), Rock Mass Rating (RMR) developed by Bieniawski (1973), and Tunnel Quality Index (Q) proposed by Barton, Lien, and Lunde (1974) methods were used. Data can be found in the GBR for the 95% design (Appendix B-12) and average conditions are summarized in Table 5-7. Histograms showing the range of RQD, RMR and Q values are shown on Figure 5-222, Figure 5-233, Figure 5-244). Note that RMR and Q values in Table 5-7 and in the figures assumed that the rock mass would be fully drained as water pressure was assumed to be relieved by the use of horizontal drains and may be biased high for conditions actually encountered during tunneling. Corrections to RMR and Q values presented in the GBR for the 95% design will be completed as the tunnel design progresses.

Table 5-7. Summary of rock mass classification from GBR [descriptors in brackets].

Rock Mass Classification Method	Overall Bedrock	Andesite	Pyroclastite	Basaltic Andesite
RQD (Average)	81.3% [Good]	85.4% [Good]	90.1% [Good]	67.8% [Fair]
RMR[1] (Average)	67.2 [Class II, Good Rock]	68.9 [Class II, Good Rock]	65.7 [Class I, Very Good Rock]	62.5 [Class II, Good Rock]
Q[2] (Geometric Mean)	12.1 [Good]	11.8 [Good]	21.4 [Good]	3.8 [Poor]

[1] Assumed completely dry groundwater conditions and very favorable joint orientations

[2] Modified Q system - did not consider J_w (joint water reduction number) or SRF (stress reduction factor)

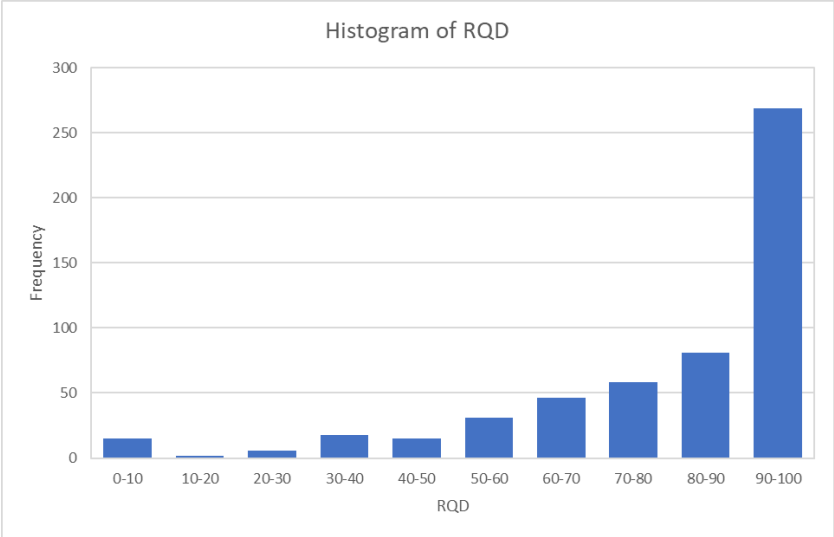

Figure 5-22. Histogram of RQD values.

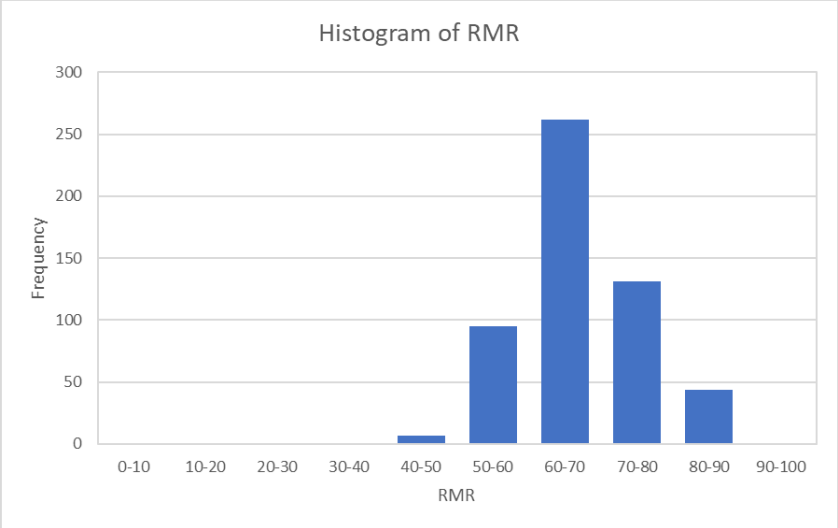

Figure 5-23. Histogram of RMR values (assumed completely dry groundwater conditions and very favorable joint orientations)

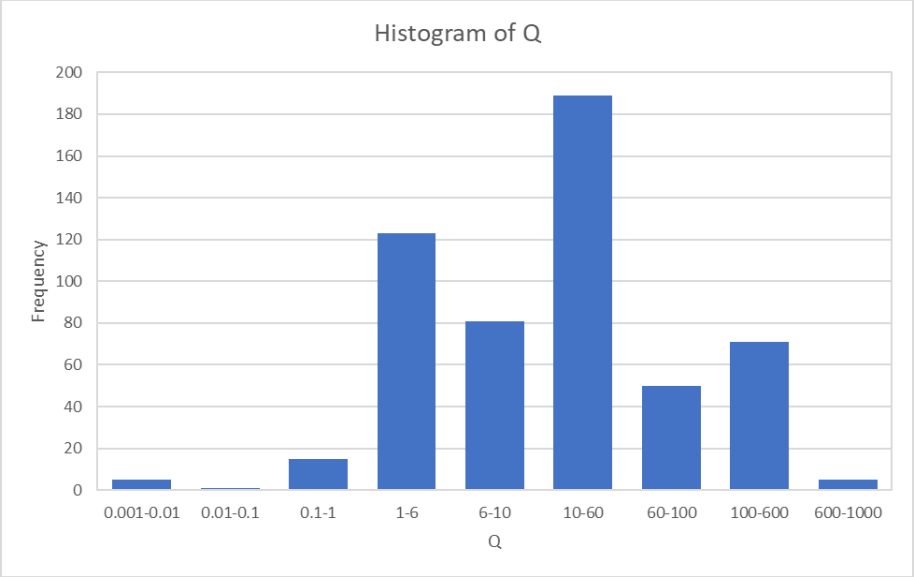

Figure 5-24. Histogram of Q values [modified Q system - did not consider J_w (joint water reduction number) or SRF (stress reduction factor)]

For the 95% design, the AWC tunnel was designed as a 9-foot diameter horseshoe shaped tunnel. AWC tunnel support was analyzed using kinematic and limiting equilibrium analyses using the software, UNWEDGE developed by Rocscience. Rock reinforcement was selected to achieve a minimum FOS of 2.0. Only rock quality data from nearby borings were used for AWC tunnel design. Analysis assumptions included: in situ rock stresses were low and were neglected, the angle of internal friction for rock discontinuities was 40°, rock discontinuities were planar and persistent features, the unit weight of rock was 165 pcf, no water pressure, and maximum discontinuity length was 20 feet. The Q system, an empirically based method, was also used. The excavation support ratio (ESR) was assumed to be 1.0, with a J_w of 0.5 (assumed minor water inflow) and a SRF of 1 which corresponds to a medium stress condition. Recommended initial ground support for the 95% design AWC tunnel included:

- 8 to 15 foot long, No. 9, Grade 75 threaded bars placed on a 5-foot spacing both radially and longitudinally.
- 6-inches of steel fiber reinforced shotcrete applied to the tunnel crown and sidewalls.

The proposed deceleration tunnel will be a horseshoe shaped tunnel with a 1-foot thick permanent concrete liner. It is assumed that initial ground support will include rock dowels and shotcrete, similar to the 95% design AWS tunnel described above. To allow for shotcrete and liner construction, an excavated tunnel diameter of 16 feet will be needed.

A check of ground support requirements was completed using all existing geologic information collected for the 95% design. Explorations for the existing excavation encountered a wide range of rock types and properties. For this assessment, it is assumed that this range of properties is applicable to the rock types that will be encountered during construction of the deceleration tunnel. Additional explorations will be completed prior to future design phases to determine the actual range of properties along the tunnel alignment. The Q system was used to assess tunnel rock support. A span of 16 feet and an ESR value of 1.0, which is recommended for civil projects, was selected. Q values provided in the GBR were modified to account for minor water inflow

(J_w = 0.5). Using the modified Q value, the geometric mean for overall bedrock was 6.05, with a minimum of 0.035. Assuming the most conservation case using the minimum Q, rock support design for the deceleration tunnel requires fiber reinforced shotcrete (up to 6 inches thick) and bolts spaced every 5.5 feet (see Figure 5-25). Using methods from Barton et al (1980), the estimated rock bolt length based on the width and ESR is about 9 feet, which is in the range previously recommended for the AWC tunnel.

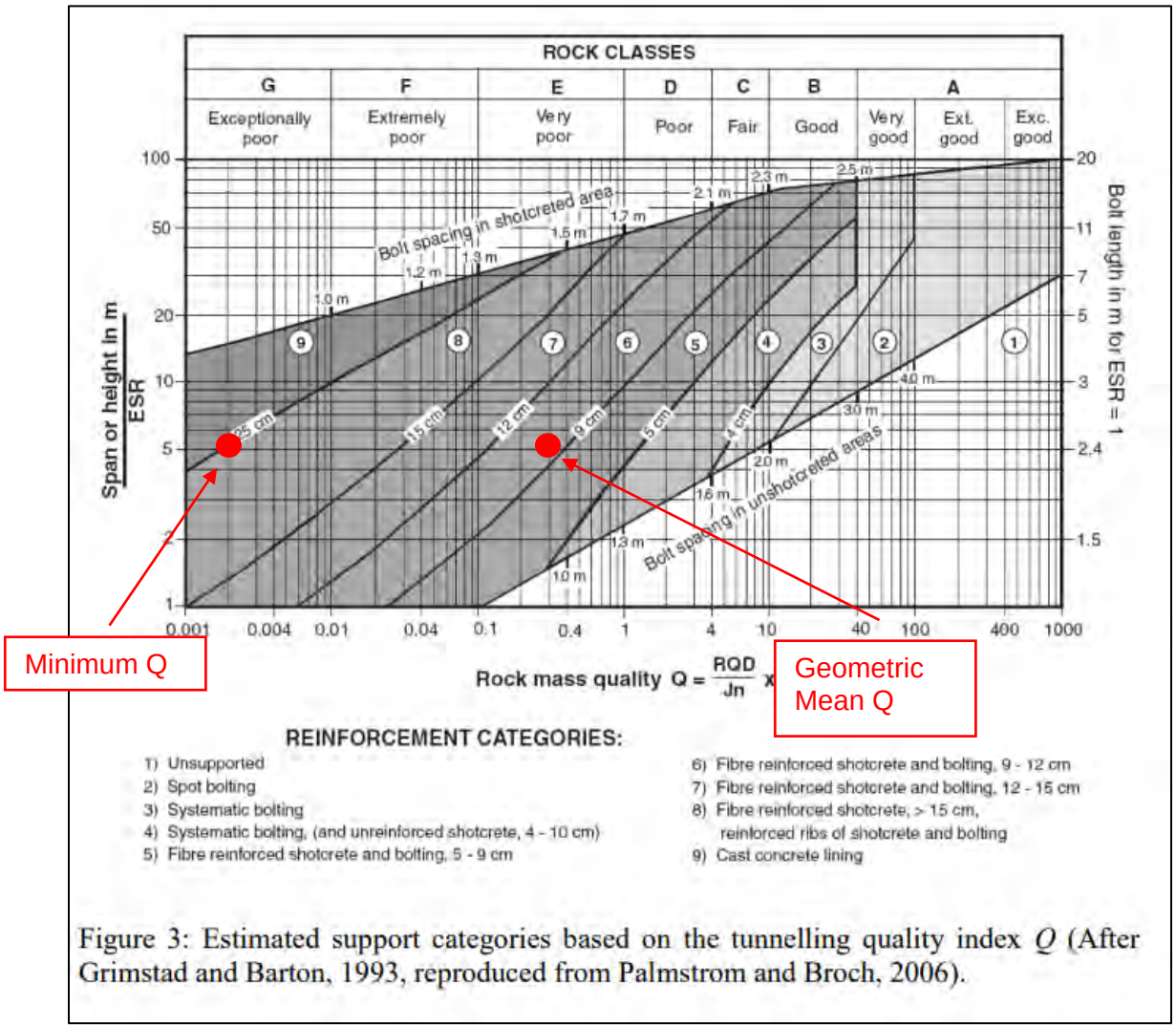

Figure 3: Estimated support categories based on the tunnelling quality index Q (After Grimstad and Barton, 1993, reproduced from Palmstrom and Broch, 2006).

Figure 5-25: Estimated tunnel support categories

The RMR system was also used to assess tunnel construction. Using values from the GBR, the average RMR value for the overall bedrock is 67.2 which is considered Class II, good rock and the minimum RMR values is 34.0 which is considered Class IV, poor rock. Using guidelines presented by Bieniaski (1989), tunnel construction in poor rock should start with the top heading and bench (drilling the top portion in advance of the bottom portion) with support installed after each blast (Figure 5-26). For good rock, tunnel excavation could have full face advancement.

Table 5: Guidelines for excavation and support of 10 m span rock tunnels in accordance with the *RMR* system (After Bieniawski 1989).

Rock mass class	Excavation	Rock bolts (20 mm diameter, fully grouted)	Shotcrete	Steel sets
I - Very good rock *RMR*: 81-100	Full face, 3 m advance.	Generally no support required except spot bolting.		
II - Good rock *RMR*: 61-80	Full face , 1-1.5 m advance. Complete support 20 m from face.	Locally, bolts in crown 3 m long, spaced 2.5 m with occasional wire mesh.	50 mm in crown where required.	None.
III - Fair rock *RMR*: 41-60	Top heading and bench 1.5-3 m advance in top heading. Commence support after each blast. Complete support 10 m from face.	Systematic bolts 4 m long, spaced 1.5 - 2 m in crown and walls with wire mesh in crown.	50-100 mm in crown and 30 mm in sides.	None.
IV - Poor rock *RMR*: 21-40	Top heading and bench 1.0-1.5 m advance in top heading. Install support concurrently with excavation, 10 m from face.	Systematic bolts 4-5 m long, spaced 1-1.5 m in crown and walls with wire mesh.	100-150 mm in crown and 100 mm in sides.	Light to medium ribs spaced 1.5 m where required.
V – Very poor rock *RMR*: < 20	Multiple drifts 0.5-1.5 m advance in top heading. Install support concurrently with excavation. Shotcrete as soon as possible after blasting.	Systematic bolts 5-6 m long, spaced 1-1.5 m in crown and walls with wire mesh. Bolt invert.	150-200 mm in crown, 150 mm in sides, and 50 mm on face.	Medium to heavy ribs spaced 0.75 m with steel lagging and forepoling if required. Close invert.

Figure 5-26: Guidelines for excavation support (steel fiber reinforced shotcrete may be considered in place of wire mesh and shotcrete).

As noted above, RMR calculated for the 95% design GBR may be biased high as applied to this new design. During construction of the Outlet Tunnel, steel sets were required where pyroclastic material was encountered. A similar assumption for the deceleration tunnel will be used for costs purposes. Figure 5-277 the shows geologic map and supports for the Outlet Tunnel. Pyroclastics were encountered along about 35% of the tunnel length.

Figure 5-27. Outlet Tunnel geology and support (red=basalt, green=andesite, blue= pyroclastics, grey=felsite; steel sets shown along sections with black arrows)

For this phase of design, it is assumed that a full face advancement method will be used. Increased support requirements (i.e. steel sets) will be assumed in areas where pyroclastics are encountered. Using the Outlet Tunnel geology map (Figure 5-27) and bedrock geology map (Figure 5-3), about 30-35% of the deceleration tunnel alignment could encounter pyroclastics and could require steel sets spaced 5-foot on center. In the remaining areas, 8 to 15 foot long, No. 9, Grade 75 threaded bars placed on a 5-foot spacing both radially and longitudinally can be used. 6-inches of steel fiber reinforced shotcrete applied to the tunnel crown and sidewalls will be applied along the length of the tunnel.

Limitations to this analysis for the deceleration tunnel support include: information on local rock properties, omission of the discontinuity pattern on tunnel drive orientation, and impact of significant groundwater pressures if encountered. Additional analysis will be completed in future design phases to include re-assessment of rock mass classification, kinematic and limit equilibrium analysis for tunnel stability, as well as numerical modeling to assess stress distributions and impact on existing structures.

5.11. Retaining & Subsurface Walls

Retaining/subsurface walls for the new/modified structural elements (e.g., collector and stilling basin structures) have been evaluated for stability as part of this design effort (see Section 8. Structural Design). A summary of the updated lateral earth pressure coefficients is provided in Table 5-8.

Based on review of the previous 95% design, the other retaining walls for the revised FPF (e.g., gabion walls, concrete guide wall) will be similar to those shown in the previous 95% design, and these walls were not re-evaluated for global or sliding stability. While the MDE PGA increased from 0.25 g at the time of the previous 95% design to the current 0.294 g, as previously discussed, the previous 95% calculations appeared to use the full PGA, rather than 2/3's of the PGA per EM 1110-2-2100. So the previous 95% design used 0.25 g and the future stability analysis will use 2/3*0.294 g = 0.196 g. Thus, the existing design was considered reasonably conservative, even with the increase in the MDE PGA.

Table 5-8. Summary of updated lateral earth pressure coefficients for backfilled retaining and subsurface walls.

Design Case				Usual - Static	Unusual - OBE	Extreme - MDE
Factor of Safety - Sliding				1.5	1.3	1.1
Soil Backfill Properties	Unit Weight (pcf)		Total	130	130	130
			Buoyant	67.6	67.6	67.6
	Friction Angle		Nominal (ϕ)	35	35	35
			Developed[1] (ϕ_d)	25.0	28.3	32.5
Seismic Parameters	Return Period (yr)			--	145	950
	PGA (g)			--	0.113	0.294
	Seismic Coefficient, k_h (g)			--	0.075	0.196
Lateral Earth Pressure Coefficients[2,3]	Driving Side	Static	K(a)	0.405	0.357	0.301
		Seismic - ΔK(a)e[4]	Non-Yielding Backfill (Wood - Fluid Equivalent[5])	--	0.151	0.392
			Yielding Backfill (M-O[6])	--	0.048	0.129
	Resisting Side	Static	K(p)	2.466	2.804	3.320
		Seismic (M-O)	ΔK(p)e	--	-0.129	-0.378

Notes:

[1] EM 1110-2-2100 Stability Evaluations of Concrete Structures requires the use of developed friction angle in calculations of soil lateral earth pressure loads. Developed soil friction angle is defined as $\phi_d = \tan^{-1}((\tan \phi)/[\text{FS-Sliding}])$. See EM 1110-2-2100 for additional information.

[2] Values assume level backfill.

[3] Lateral earth pressure coefficients refer to K(a) - driving side and K(p) - resisting side per typical geotechnical nomenclature for active and passive pressures. However, these are not true active or passive parameters since EM 1110-2-2100 methods requires the use of developed strengths based on the factor of safety against sliding applied to the soil shear strength for calculation of lateral earth pressures.

[4] Seismic earth pressures are in addition to static earth pressures and groundwater pore pressures. These additional seismic lateral earth pressure coefficients should be applied to total unit weight or total stress, even for submerged backfill conditions.

[5] Wood calculations assume a uniform pressure, not a triangular or fluid pressure. Thus, for comparison to other lateral earth pressure coefficients, Wood - Fluid Equivalent values shown in table include a factor of 2 (i.e. $2*k_h$). For calculating non-yielding backfill seismic force per Wood method use k_h shown in table and equations in EM 1110-2-2100 or assume triangular/fluid pressure using the fluid equivalent values similar to typical earth pressure calculations. Resultant should be applied at 0.63H.

[6] Monobe-Okabe resultant should be applied at 0.67H (i.e., inverted triangle).

5.12. Pavements

Based on review of the previous 95% design, the pavement sections for the revised FPF (i.e. aggregate surfaced roads and EL 1181 PCC deck) will have similar requirements to those shown in the previous 95% design, and the pavement sections were not re-evaluated or updated.

5.13. Excavatability Analysis

Rock Excavation

Rock excavation is assumed to be completed by drill and blast methods. Mechanical excavation methods may be considered in the future for some areas. All excavation methods will need to be protective of critical dam infrastructure. Drill and blast and mechanical excavation have been successfully used during previous construction activities without damaging existing infrastructure.

The existing FPF excavation was completed using controlled blasting methods to limit blast induced deformations on critical infrastructure. To mitigate excavation-and blasting imposed risks, the following strategies were followed: the rock was supported prior to and during excavation (e.g., rock bolts, shotcrete, grouting, and dewatering), instrumentation was installed to monitor the structures and surrounding rock mass, threshold and limiting values were specified for all instruments, strict contract specifications were written to control blasting methods, and instrumentation results were used to assess construction contract compliance and to revise excavation and rock support measures as necessary. No distress in the excavation rock face or nearby structures was observed despite measured blast induced vibration of 16 in/sec on nearby structures and despite rock face strain as high as 0.1%.

Mechanical excavation was used to remove the thin layer of rock (about 10 feet wide) at the southeast corner of the existing excavation. This area is referred to as the ‘reaction plane’ as it is part of the bearing surface for the cofferdam. The contractor was able to drill the trim holes to depth, then used the production holes and an impact hammer to remove the rock.

Tunnel

Tunnel excavation is assumed to be completed by drill and blast methods. Excavation by mechanical methods (e.g. road header or tunnel boring machine) may be evaluated during future design. It is assumed that excavation will proceed using full face advancement, where the entire diameter of the tunnel is excavated at once. In areas of poor quality rock, the initial opening may need to be reduced and supported following each blast (e.g. top heading and bench method). The impact of poor quality rock zones on tunnel construction methods will be assessed further following geotechnical explorations.

The existing outlet tunnel was also constructed using drill and blast methods. The 19-foot diameter semi-horseshoe tunnel was constructed in 1959. The tunnel was advanced through hard and fractured basalt and andesite as well as soft, highly weatherable pyroclastics and encountered major water bearing faults. Blasting included ten-foot rounds in a standard pyramid cut drill pattern with minor overbreak. Tunnel progress was 10 feet per day, which included drilling, loading, blasting, mucking and setting steel supports (rib and post) where required.

5.14. Construction Techniques

Collector and Bypass Structure

The existing excavation for the collector will need to be deepened and expanded for the bypass structure in the north-west direction. Excavation by drilling and blasting will be completed in 10-foot lifts, with rock reinforcement installed after each lift. Prior to excavation, additional rock bolts will be installed in the outlet tunnel. For the bypass structure excavation, it is assumed that rock mass grouting and drilled piles are needed and will be installed once the excavation reaches about elevation 1,080 feet.

Groundwater control will be required during excavation and construction. Weep holes in the excavation sidewalls and dewatering wells will be used to reduce water pressures in the rock mass. There are currently 4 remaining dewatering wells from previous construction that could be used; however, two of these wells will need to be rehabilitated prior to use. Additional wells will also need to be installed; 8 wells were assumed for this design phase. Flow rates are anticipated to be similar to previous excavation work and wells will be designed to accommodate 300 gpm. Pending water quality, dewatering water could be directly discharged to the reservoir. Otherwise, water will be pumped to the settling ponds for treatment prior to discharge.

Instrumentation will be required during excavation for protection of critical infrastructure and personnel safety. Instrumentation and monitoring requirements are discussed in Section 5.5 and including monitoring existing instrumentation as well as installing new instrumentation.

Excavated material will be either be transported to the disposal site or staged onsite and used as backfill.

Backfill between the structure and excavation will be concrete at the lowest level where the structure will be formed against the excavation. As the space between the face of the excavation and structure increases, such that formwork can be erected but the space between the excavation and structure is less than about 5 feet, controlled density fill is assumed for backfilling. Where the space between the excavation and structure is greater than about 5 feet, it is assumed compacted fill will be placed to the bottom of 1181 deck pavement section.

Guide Wall

Guide wall upstream of the collector in the reservoir will have foundations excavated and constructed in the dry during low pool (bottom of foundation EL 1145 – see Aug 2008 95% drawings S-255 to S-257).

Deceleration Tunnel

The deceleration tunnel will be constructed using drill and blast methods. It is assumed that full face advancement will be used. Initial ground support will be installed following each blast consisting of 6-inches of reinforced shotcrete and rock bolts or steel sets. A 16-foot diameter horseshoe excavation will be needed to install the ground support and final 1-foot thick concrete liner. Tunnel portals will require additional support and will be evaluated during future design. A portion of the tunnel (about 100 feet) near the stilling basin may require an open cut excavation due to the lack of sufficient ground cover for tunneling.

Ventilation/utilities, drainage, and water control will be needed during tunnel construction. Water inflow into the tunnel was estimated using Goodman's equation with Heurer's reduction (Heurer, 1995). Using the range of hydraulic conductivity values calculated from packer tests, as documented in the GBR for the 95% design (Appendix

B-12), inflow into the tunnel could range up to 1,000 gpm. For this phase of design, this high end value will be assumed for water handling costing purposes.

Additional groundwater control may also be needed in areas of poor quality rock or highly fractured zones. It is assumed that post-excavation ring grouting for groundwater control will be needed in some areas prior to placement of the final tunnel liner. It is assumed that only major fractured zones will need to be grouted for about 10% of the tunnel volume. A contingency for more extensive grouting from the tunnel face should be included.

Stilling Basin

Construction of the stilling basin will be a combination of rock and overburden excavation. A cofferdam, such as an earth berm or supersacks, will be required in the river during construction. It is assumed that rock removal will be by drilling and blasting. Rock cut stabilization, such as shotcrete and rock bolts, will be installed as needed. Dewatering wells may be required for groundwater control. Six dewatering wells to 200 feet are currently assumed for costing purposes.

5.15. Re-use of Excavated Materials

In general, the rock excavated for the FPF is not considered high quality aggregate for use as base course, gravel surfacing, or concrete aggregate (Lingley et al. 2002); however, these rocks are locally used for logging road construction and surfacing. These rocks are considered poorer quality due to susceptibility to mechanical breakdown and weathering (e.g., freeze-thaw and exposure to atmospheric conditions). Available LA abrasion testing of aggregates mined from the Ohanapecosh Formation range from 14 to 55 percent (Lingley et al. 2002). Rock/aggregate strength and durability generally appears to correlate with the specific gravity of the rock at the site (see Table 5-2) and locally (Lingley et al. 2002).

Based on the 95% GBR, as summarized at the end of Section 5.2 Regional and Site Geology, the rock in the vicinity of the collector and steep slope bypass excavations is estimated to be 70% andesite, 20% pyroclastite, and 10% basalt andesite. The pyroclastite is the particularly poor material, based observations of outcrops near the dam, as well as laboratory testing, and is not recommended for use as structural fill (3-inch minus) or rock fill (24-inch minus). The andesite and basalt andesite are considered suitable for structural fill and rock fill once processed from the excavation spoils to meet gradation requirements. These materials should not be placed within 24 inches of finished grade to prevent freeze-thaw degradation.

Based on the percentages of rock volumes, 80% of the rock is assumed to be re-usable for on-site backfill after processing. However, due to the significant variability in the layering of materials and the nature of their removal (drill and blast), it may be difficult for the contractor to efficiently segregate these materials. For cost estimating, it should be assumed that only 50% of the excavated rock will be suitable for re-use as on-site fill. Specific gravity testing may be used to help establish acceptance criteria of backfill during construction (e.g., $Gs \geq 2.5$), and additional testing should be performed during future exploration and design phases to further establish acceptance criteria for re-use of materials, especially along the new tunnel alignment where limited existing information is available.

As an alternative to segregating the better rock from the poorer rock during construction for backfilling of the collector and bypass excavation, the use of alternative fills incorporating all the material should be considered during future design. A cyclopean concrete/plum concrete/rubble concrete approach to placing fill using all materials may

allow for re-use of a greater volume excavation spoils as backfill. In this approach coarse materials (typically 6-inch plus) are placed within a controlled density fill or a weak grout is injected after placement of the coarse material to fill the voids. In this application the materials are encased in grout but should only need to meet the strengths requirements of a compacted structural fill or rock fill. Again, placement of materials should not be placed within 24 inches of finished grade to prevent freeze-thaw degradation.

Base course, aggregate surfacing, and free draining backfill (e.g., within 12 inches of the back of retaining walls) will need to be imported.

5.16. Borrow and Disposal Sites

Overburden and rock removed during excavation will continue to be disposed at the 6-mile disposal site, located about 2.2 miles from the dam.

There are several local borrow sources/quarries for construction aggregates and structural fill including in Enumclaw (14 miles) and Black Diamond (17 miles).

5.17. Concrete Sources

Based on the concrete materials investigation performed for the 95% design, there are two concrete plants within about a 30-minute travel time. Contractors may also elect the option of setting up a mobile plant off site but within a reasonable travel time. No area will be available for a plant on site; however, a batch plant could potentially be set up at the 6-mile disposal site, located about 2.2 miles from the dam.

The nearest plant capacity is approximately 120 cubic yards per hour and another is 200 cubic yards per hour. The 200 cubic yard per hour plant is currently shut down but would probably restart for this large of a project. The accessibility to the site will probably control the placement rates and the 120 cubic yard per hour will likely be sufficient.

For additional details, see 95% DDR Appendix N.

5.18. Future Explorations, Testing, and Analysis Required

Geotechnical explorations will be required prior to further design. Rock or soil borings will be completed at the collector/bypass excavation, tunnel, stilling basin, and outlet structure. Borings will be advanced using drilling methods appropriate for the anticipated subsurface conditions, rock or soil.

Field testing could include optical and acoustic televiewers to obtain discontinuity orientation data, packer tests to determine permeability, downhole seismic to determine rock properties. Lab testing will be used to determine rock properties and could include unconfined compressive stress (UCS), triaxial compressive strength tests, splitting tensile strength tests, and direct shear tests. Instrumentation, such as piezometers and inclinometers, will be installed in the boreholes for monitoring prior to and during construction. Pumping tests at the stilling basin area may be required to finalize the dewatering design.

Advanced numerical modeling, for example FLAC, will be needed during future design phases to assess rock stress distributions, reinforcement requirements, and impact on critical infrastructure.

5.19. References

Barton, N., Løset, F., Lien, R. and Lunde, J. 1980. Application of the Q-system in design decisions. In Subsurface space, (ed. M. Bergman) 2, 553-561. New York: Pergamon.

Barton, N.R., Lien, R. and Lunde, J. 1974. Engineering classification of rock masses for the design of tunnel support. Rock Mech. 6(4), 189-239.

Bieniawski, Z.T. 1973. Engineering classification of jointed rock masses. Trans S. Afr. Inst. Civ. Engrs 15, 335-344.

Bieniawski, Z.T. 1989. Engineering rock mass classifications. New York: Wiley.

Heuer, R.E. 1995. Estimating rock-tunnel water inflow. Proceeding of the Rapid Excavation and Tunneling Conference, June 18-21, 1995. 41.

Lingley, W. S., Jr., Knoblach, D.A., and Nightingale, C.K.B. 2002, Reconnaissance investigation of sand, gravel, and quarried bedrock resources in the Snoqualmie Pass 1:100,000 quadrangle, Washington. Washington Division of Geology and Earth Resources Information Circular 96, 63 p., 1 plate.

Shannon & Wilson, Inc. (S&W), 2004a. 100% (Final) Geotechnical Report Excavation and Tunnel Rock Support Analyses and Recommendations. Howard Hanson Dam Fish Bypass Facility, Eagle Gorge, Washington. February 27, 2004.

Shannon & Wilson, Inc. (S&W), 2004b. Geotechnical Report, Howard Hanson Dam Fish Bypass Facility, Laboratory Testing of Rock and Analysis of Fish Passage Facility Excavation, Rock Pillar, and Outlet Tunnel Stability, Eagle Gorge, Washington. March 29, 2004.

Shannon & Wilson, Inc. (S&W), 2014. Evaluation and Summary of Foundation Mapping Data, Howard Hanson Dam, Eagle Gorge, Washington. 9 April 2014.

Shannon & Wilson, Inc. (S&W), 2020. Instrumentation Program Evaluation Report, Howard Hanson Dam, Kanaskat, Washington. June 25, 2020.

USACE, 1963. Green River, Washington, Howard A. Hanson Dam, Foundation Report, Rock Fill Dam, Spillway and Outlet Works.

6. Environmental and Biological Considerations

6.1. Environmental and Biological Design Criteria

This Section presents the general biological design criteria that will serve to inform the design of the HAHD FPF. The criteria were extracted from fish passage guidelines (Bell 1991) and the NMFS 2011 Anadromous Salmonid Passage Facility Guidelines and Criteria Document (NMFS 2011).

- The design or operation of the fish passage facility should accommodate all juvenile life stages of Chinook salmon and winter steelhead. Coho salmon should be considered.
- The flownet created by the entrances should be of sufficient intensity to attract juveniles toward them, particularly in the absence of guidance nets or structures. (Attraction is addressed in the 95% DDR and previously completed 1:15 scale physical model (ENSR 2003.)
- The entrance of the collector must be located so it may easily be found by downstream migrating target fish species.
- The fish passage device must permit safe passage of out-migrating salmonids with minimal injury or delay.
- Ambient lighting conditions must be included upstream of the entrance and should extend to the flow control device. Where lighting transitions cannot be avoided, they should be gradual, or should occur at a point in the system where fish cannot escape the device.
- Sampling facilities installed in the system must not in any way impair operation of the facility during non-sampling operations.

6.2. Best Management Practices

6.2.1. Best Management Practices (BMPs) to Control Turbidity

USACE will direct the Contractor to implement all applicable BMPs to avoid and minimize impacts to the environment. The reference documents for BMPs and conservation measures include the 2012 Stormwater Management Manual for Western Washington Amended December 2014. Volume II: Construction Stormwater Pollution Prevention, Chapter 4. At a minimum, the following BMPs will be in place to avoid generating unnecessary turbidity during in-water work.

1. Preserving natural vegetation to prevent and reduce erosion.
2. Equipment that will be used near or in the water will be cleaned so that it is free of external petroleum-based products prior to construction. Accumulation of soils or debris will be removed from the drive mechanisms (wheels, tires, tracks, etc.) and the undercarriage of equipment prior to its use. (TPU requires equipment inspection prior to entering the watershed.)
3. The contractor will be required to submit a stormwater pollution prevention plan (SWPPP) prior to construction using best management practices to control stormwater impacts during construction.
4. Hang silt curtains where feasible.
5. Project operations will cease under high flow conditions that may inundate the site.
6. To the extent feasible, work requiring use of heavy equipment will be completed by working from the top of the bank.
7. Use methods to isolate the work area from flowing water such as SuperSacks or similar, sandbags, silt curtains, and/or berms wrapped in plastic sheeting.

The Contractor will be directed to employ BMPs to the maximum extent practicable, and these will be based on water quality monitoring. The construction must achieve a certain productivity to complete the entire project within the in-water work window. The preference is to limit the turbidity using physical or structural BMPs rather than slowing or stopping work. BMPs that reduce construction productivity could result in failing to complete the project within the approved in-water work window.

6.2.2. Impact Avoidance and Minimization Measures

Through the evaluation of alternatives, the project will avoid continued adverse impacts to the fishery resources of the HAHD reservoir and the Green River.

The project will take all practicable steps during construction to minimize impacts to aquatic resources and will outline these steps in a formal Care and Diversion of Water Plan as well as a Stormwater Pollution Prevention Plan (SWPPP). USACE will employ pollution prevention measures for storm and surface waters during construction. All storm and surface waters will be collected and treated prior to discharge into the reservoir. The project area already has an extensive surface water diversion and filtration system installed as part of the initial construction process in 2005-2011. USACE will monitor water quality during construction to assure that any impacts to water quality will be temporary in nature and minimal in overall impact. Contingencies will be in place if any of the primary minimization measures fail to achieve their intended function.

In-water work will be limited to the in-water work window of July 1 to September 30 for the Green River upper watershed above the limit of anadromous fish occupancy. Should additional time be required, USACE will coordinate the time extension with NMFS, Washington Department of Fish and Wildlife, and Washington State Department of Ecology (Ecology).

Disturbance of existing vegetation will be minimized, and vegetation removal will be limited to the tunnel outlet site and temporary access road (if required) for its construction. Noxious weeds will be disposed of separately from other organic materials at an approved off-site location. Fish Species of Concern:

The targeted species of interest for the HAHD FPF are juvenile Chinook salmon and winter steelhead as required by the BiOp (NMFS 2019). The BiOp does not require considerations for juvenile coho or pink salmon downstream passage. However, coho and pink salmon are target species for the HAHD Ecosystem Restoration Project and should be considered for this FPF project because juvenile fish for these two species would have to pass HAHD during downstream migration if adults of these species are transported from TPU’s collection facility to the upper watershed. The fishery managers (e.g., Washington State Department of Fish and Wildlife, Muckleshoot Indian Tribe) will determine which species, timing, and management of any re-introduction of salmon in the upper Green River watershed in coordination with TPU. Considerations for fish passage through the FPF should also be given for other fish species (e.g., mountain white fish, rainbow trout, cutthroat trout, dace) present in the Upper Green River Watershed that may pass downstream through the FPF.

After re-introduction of steelhead populations in the upper Green River watershed, adult steelhead (kelts) will be migrating downstream after spawning. Similarly, adult Chinook salmon may fallback (i.e., adult salmon that move back downstream after release at an upstream location) after transport and release in the Upper Green River and pass HAHD. Therefore, the FPF should be designed to pass adult salmon and steelhead.

The timing of migration through daily and seasonal cycles; migration paths, including vertical and horizontal distribution of fish; and significant migration cues require

consideration in the development and evaluation of alternatives. Annual and monthly timing of downstream migration for spring Chinook salmon, coho salmon, and winter steelhead may vary with environmental and operational conditions. The life stage and migration timing noted in the following paragraphs are from reservoir sampling in the 1980s and recent lower river sampling (downstream of HAHD), therefore, considerations should be given that juvenile salmon and steelhead growth and migration behavior and timing may change after re-introduction of these fish species in the Upper Green River after the HAHD FPF construction is complete.

Juvenile Chinook salmon generally migrate downstream in the Green River as sub-yearling life stage during late winter through early summer (R2 2001); with fry size (≤45 mm fork length) fish outmigrating during January through March and larger parr size (>45 mm fork length) fish outmigrating during April through June (Anderson and Topping 2017; Topping and Anderson 2021). Additionally, reservoir sampling indicates juvenile Chinook salmon enter the reservoir as fry beginning in late winter and spring, then pass HAHD during reservoir drawdown in fall (September through November; USACE 1998).

Juvenile steelhead and coho salmon generally outmigrate during April through June; there is evidence of fry size coho salmon entering the reservoir spring and passing the dam during reservoir drawdown in fall (September through November; USACE 1998).

6.3. Temporary Fish Passage

Temporary downstream fish passage is not required during construction of the FPF because ESA-listed fish species are not currently present in the upper Green River watershed upstream of HAHD.

6.4. Biological Opinion Requirements

The BiOp RPA 1 for this HAHD FPF project states “To avoid long term jeopardy and restore adversely modified critical habitat, USACE must: Design and build a permanent downstream fish passage system for HAHD according to the project development milestones described in Appendix A and BMPs described in Appendix B. The system should provide safe downstream fish passage for chinook and steelhead according to the performance measures described in Appendix C.” (NMFS 2019). The performance criteria for the juvenile fish passage facility as specified and described in Appendix A and C of the 2019 BiOp are:

i. “An overall juvenile fish project passage survival rate of 75%, from entry into Eagle Gorge Reservoir to release points downstream of HAHD.
ii. 95% collection of fish attracted to the JDFPF (from the fish collection efficiency line shown in Figure 1C into the trap, and
iii. 98% survival of all fish through the facility to their release downstream of HAHD.” (NMFS 2019).

6.5. Monitoring and Evaluation

Refer to the Validation Report’s Appendix E Monitoring and Adaptive Management Plan Framework.

6.6. Pre-Construction of the HAHD FPF

Pre-construction biological studies will be conducted for baseline information and to inform the design of the FPF. The studies will include, but are not limited to juvenile salmon and steelhead life histories, age class, fish size, outmigration timing, reservoir entry timing, diel distribution, vertical and horizontal distribution in the HAHD forebay, and fish passage and downstream survival through HAHD bypass tunnels. Additionally,

an assessment of predator (expected to prey on juvenile salmon and steelhead) presence and abundance in the reservoir and the river downstream of HAHD will be completed before construction of the FPF.

6.7. Post-Construction of the HAHD FPF

Post-construction biological studies are required to inform success of the FPF and address the BiOp RPA requirements for fish passage and survival (NMFS 2019; Appendix C). The BiOp requires initiating studies to evaluate the FPF one year after the initial start-up of the facility to allow for a year of operational testing and tuning (NMFS 2019; Appendix C). Further, the BiOp requires two successive years of meeting the performance criteria of the FPF before the post-construction evaluation is considered complete (NMFS 2019; Appendix C). The studies will include, but are not limited to juvenile salmon and steelhead age class, fish size, outmigration timing, reservoir entry timing, diel distribution, vertical and horizontal distribution in the HAHD forebay, and fish passage and downstream survival through the FPF. These studies will be designed to provide results to indicate the performance of the FPF (fish passage and survival) and whether or not the FPF is meeting the performance criteria as directed by the BiOp (NMFS 2019; Appendix C). Studies will likely also be conducted to assess predation on juvenile fish because predation on fish will affect the overall survival rates of the facility.

6.8. Water Quality Consideration

USACE will obtain a Clean Water Act Section 401 Water Quality Certification from the Washington Department of Ecology and abide by all applicable conditions in the certification. Conditions will require monitoring turbidity throughout construction and pH during any tremie concrete pouring. The Contractor's environmental compliance staff will be required to coordinate with the USACE project biologist to meet all required reporting on water quality sampling results.

6.9. References

Anderson, J.H. and P.C. Topping. 2017. Juvenile Life History Diversity and Freshwater Productivity of Chinook Salmon in the Green River, Washington. North American Journal of Fisheries Management 38:180-193, 2018

Bell, M. 1991.Fisheries Handbook of Engineering Requirements and Biological Criteria.

NMFS (National Marine Fisheries Service), 2011. Anadromous Salmonid Passage Facility Design. National Marine Fisheries Service, Northwest Region, Portland, Oregon.

NOAA (National Oceanic and Atmospheric Administration) NMFS (National Marine Fisheries Service) (2019). WCR-2014-997 Biological Opinion on Howard Hanson Dam, Operations, and Maintenance, Green River (HUC 17110013) King County, Washington. NOAA NMFS West Coast Region, Portland, OR.

R2 Resources. 2001. Juvenile Salmonid Use of Lateral Stream Habitats Middle Green River, Washington. 2000 Data Report. Prepared for U.S. Army Corps of Engineers, Seattle District.

Topping, P.C. and J.H. Anderson. 2021. Green River Juvenile Salmonid Production Evaluation: 2020 Annual Report. FPA 21-04. Washington Department of Fish and Wildlife, Olympia WA.

USACE. 1998. Additional Water Storage Project, Draft Feasibility Report and Environmental Impact Statement. April 1998. Prepared by Seattle District US Army Corps of Engineers. Available online: https://www.nws.usace.army.mil/Missions/Environmental/Environmental-Documents/

7. Civil Design

7.1. Civil Design Features

The project site is approximately 4.5 miles within the TPU guard-controlled Head works gate within a restricted watershed and subject to specific controls and restrictions regarding site access and Green River watershed activities. The project site also lies within a forested area designated as a Fire Protection Zone. This is a single-lane gravel road (Access Road “A”) with CB radio contact (Channel 10) between vehicles including logging trucks. Work must be conducted such that all activities do not impact the TPU water supply and USACE Project Operations.

There is a per trip heavy equipment (vehicles over 14,000 lbs.) maintenance fee that TPU charges based on usage. Previous rates were $25/trip for hauling heavy equipment on the Tacoma Headworks access road from Kanasket – Cumberland Road to the dam (Access Road “A”). And $3.75/trip for hauling to the Project Disposal Site for all construction vehicles over 14,000 lbs. The Contractor is responsible to maintain the road from the dam to the staging and stockpile area(s) in the same condition as that prior to construction throughout the construction period and maintained at least once per week during period of heavy use.

Access Road “A” – Access Road “A” is a single-lane access road to the dam site. The speed limits is 35 mph on lengths of paved road (Kanasket -Palmer Road to the Headworks gate) and 25 mph on gravel lengths. The original constructed widths vary from 18 feet to 22 feet. Approximately one mile from the guard station toward the damsite is a one-lane bridge (originally a railroad bridge). All vehicles are required to come to a complete stop before proceeding onto this bridge.

Access Road “B” – Access Road “B” is on top of the dam and is restricted. Access across the top of the dam use of this road must be approved the by Project Site Operations Manager.

Access Road “C” – Access Road “C” (Access Road 1 on the drawings) is across the face of the dam through the construction site and shall be maintained by the contractor.

Spillway and Outlet Works Bridges – These bridges were designed to the 1957 AASHO Standard Specification for Highway bridges for H20-S16-44 loading which is currently designated by ASSHTO as HS20-44 loading. Access is restricted and must be approved by the Project Site Operations Manager.

Control Gates – In addition to the gate at the entrance guard station, control gates stand at either end of the dam embankment. Gates close automatically at hours established by Operation Personnel.

Figure 7-1: General Site with access roads A, B, and C

The staging area shown on the drawings have been used in past projects. All Tacoma Public Utilities staging areas need to be coordinated with TPU, and any associated fees.

7.1.1. **2009 Features**

Civil Features are essentially the same as the 2009 design with the removal all features related to trap and haul. See the Civil Appendix for the drawing plates not included in the current design.

The features removed are:

- Domestic Water
- Restrooms
- Truck ramp at the 1181 foot elevation deck
- Up reservoir log booms
- Administration Building

7.2. Current Features

- 1,181 Foot Elevation Deck
- Guide Wall
- Retaining Wall

- Access Roads 1 through 3
- Sedimentation Pond
- Downstream Left Bank Erosion Protection

The site of the new bypass structure is accessed via Access Road “C” down to approximate elevation 1,167 feet at the existing 2008 excavation area. The existing excavation needs to be enlarged for the new bypass structure. The completed area is a PCC 1,181 feet elevation deck (1,181 Deck), and raised access roads 1 and 3 (3a, 3b, and 3c). A new access road 2 from the 1,181 Deck to the spillway gate area and culvert to drain the spillway area after high reservoir events. Four retaining wall structures are required to support the 1,181 Deck raise. Earthen retaining wall at the 1,181 foot area of Access Road 1 is required, along with a concrete Retaining Wall along the right side (East) of the existing intake tower. A new Guide Wall along the left entrance of the new Bypass Structure is required along with a short retaining structure at Access Road 3 in that area.

A major feature is the 1,181 foot elevation PCC deck (1,181 Deck) adjacent to the new Bypass Structure which raises the existing area (approximate elevation 1,167’) to elevation 1181’. The section for the concrete work deck is expected to be 8” PCC and 8” base over structural fill over rock spalls, over 24” minus rock fill.

Access to the 1,181 Deck is via Access Road C, This road will be raised (Access Road 1) to the new 1,181 deck surrounding the Bypass structure. The 1181 deck and Access Road 1 requires retaining structures at the east side of the deck. The east side of the deck is a structural retaining wall meeting Access Road 1 which utilizes an earthen wall structure. The 2009 layout included area to access the fish handling facility which is not longer a part of the project. The location and geometry of the retaining wall can be refined based on Operations activities required in the area.

Access Road 2 is utilized to access the area directly in front of the Spillway gates (approximate elevation 1,165’) from the 1181 deck. A culvert allows the area directly in front of the Spillway gates to drain back to the reservoir.

The south end of the 1,181 deck meets the Guide wall and Access Road 3. The Guide wall retains the fill from the 1,181 deck and Access Road 3 raise. The Guide wall also directs river flow into the Bypass Structure. Access Road 3 splits into road 3A and 3B

The sedimentation ponds used during the 2009 construction must be rehabilitated prior to usage. Once rehabilitated and used the for this project, they shall be demolished, the area graded flat and re-vegetated.

In 2014 a Downstream Left Bank Erosion Protection project was designed to improve the storm drainage along the access to the new Downstream Channel area. This project has been included in the Civil Appendix A.

The 1,181 deck will be constructed of concrete pavement to allow use by heavy equipment and stoplog storage. The location of stoplog storage will be along the south side of the 1,181 deck and the method of transporting the stoplogs from the gantry crane operating area to the storage site will be by forklift.

Access Road and Retaining structures to the 1,181 Deck. Access road 1 is 14 foot road wide with 2H:1V side slopes, with gravel wearing surface course. The access road will be from offsite sources. This access is approximately 375 lineal feet starting at elevation 1,210 feet and a with a 15.4% grade transitioning to a 9.3% grade ending at the 1,181 foot elevation deck. A gabion or other retaining structure is required on the reservoir side of the access road to minimize the amount of fill needed.

This access road must also serve as a dam to prevent water from filling in behind the fish passage facility. A culvert within this road will provide drainage of runoff from the interior, and will allow the interior to be backwatered preventing damage due to a possible overtopping event. It was found that a 24-inch culvert could sufficiently fill the interior with a corresponding 100-year flood event. A flap gate positioned at the reservoir end of the culvert and operated correctly will prevent fish and water from entering the interior pond during reservoir storage, allow the interior to drain during low reservoir levels; it would allow the interior to be back flooded in case of an overtopping event. Operation of the flap gate involves leaving the gate closed during summer storage periods when the reservoir elevation will exceed 1,165 NGVD29, and opening the gate after the storage season to allow back flooding during a possible winter storm flood event.

Access road 2 will allow access from the 1,181 foot elevation deck to the area in front of the spillway (approximate elevation 1,166 feet). Access road 2 is approximately 215 feet long with a maximum slope of 9 percent.

Access Roads 3, 3a, and 3b will allow access from the 1,181 foot elevation deck to the sedimentation pond, seawall, and Administration Office areas. Access Road 3 should be 18 feet to 20 feet wide and be open to traffic during construction.

Guide wall retains the fill from the 1,181 deck and Access Road 3 raise. The Guide wall also directs river flow into the Bypass Structure. Access Road 3 splits into roads 3A, 3B and 3C in the vicinity of the Sedimentation Pond.

Log Boom at structure to the island, access to the log boom anchorage site on the island will probably be via water, as land access is not feasible with any large equipment.

Stop Log Storage is sited along the existing solder pile wall on the west side. The stop log storage location is to facilitate through traffic and access.

Additional Rock excavation at the Structure, approximately 36,300 CY.

Downstream Channel improvements

Recommend the tunnel exit into a channel that runs along the left bank for as far downstream as needed.

1. This may require a retaining wall and catwalk over the channel
2. This will reduce any road construction and still allow pedestrian access.

The access to the downstream stilling basin area is accessed via an existing gravel road with existing grades approaching 13%. The bottom elevation of the road must be maintained to adequately access the riverbed for annual summer maintenance of the existing outlet structure area. The new access road will cross the new proposed stilling basin channel suitable for HL-93 loading and terminate at the existing terminus. This road will hold the existing slope and require approximately 100 feet of retaining structure along the left edge of the stilling basin edge.

The new stilling basin channel pre-formed scour hole will be adjacent to the existing storm drainage system. This storm drainage system should be improved with the 2014 Left Bank Erosion Protection Project modified to accommodate the new stilling basin features. This is included in the Civil Appendix.

Figure 7-2: Existing Downstream Storm Drain system

Figure 7-3: Plunge Pool Access

Access to the plunge pool area is anticipated to be by stairway and path from the right bank

7.3. Real Estate

See Sheet G-101 and G-102 for overview

7.4. Relocations

None

7.5. Demolition

The existing sedimentation ponds from the previous construction activities will be demolished after construction of the project.

7.6. Utilities

The 2014 Left Bank Erosion Protection project should be modified to accommodate the new stilling basin work. This project improves the drainage from the railroad grade down to the river.

7.7. Staging and Construction Access Roads

See sheets G-101 and G-102

7.8. Stormwater

A comprehensive stormwater management system was installed throughout the construction site upon initiation of construction in 2004. This included a pump system to deliver stormwater from the main construction activity area uphill to two sedimentation ponds, which have an oil-water separator to filter water before in flows into the sedimentation ponds. The system will need to be cleaned and restarted upon re-initiation of construction. USACE will require the contractor to obtain a Construction Stormwater General Permit per Section 402 of the Clean Water Act.

The 2014 Left Bank Erosion Protection project is also included as part of the downstream features.

8. Structural Design

8.1. Structural Components

The structural design of the facility will focus on key structural components that are to be sized based on hydraulic and biological criteria and then are evaluated for strength and stability to meet structural design requirements. These primary key features include:

- Intake Screens
- Dewatering Bulkheads
- Multiport collector with 5 fish horns
- Full Flow Bypass Structure
- Steep Slope Bypass Piping
- Tunnel Lining
- Outlet Piping
- Concrete outlet structure/Stilling Basin
- Primary outlet piping and outfall
- Project Access for inspection and maintenance
- Structural Stability Analysis

8.2. Functional Design Requirements and Technical Design Criteria

USACE Technical Design Criteria include the following locations:

1. EM 385-1-1, Safety and Health Requirements Handbook, 2014 version
2. EM 1110-2-1100, Coastal Engineering Manual
3. EM 1110-2-2002, Evaluation and Repair of Concrete Structures
4. EM 1110-2-2100, Stability Analysis of Concrete Structures
5. EM 1100-2-2104, Strength Design for Reinforced Concrete Hydraulic Structures
6. EM 1110-2-2107, Design of Hydraulic Steel Structures (Draft)
7. EM 1110-2-2610, Mechanical and Electrical Design for Lock and Dam Operating Equipment
8. EM 1110-2-6053, Earthquake Design and Evaluation of Concrete Hydraulic Structures
9. ER 1110-2-217, Civil Works Review Policy
10. ER 1110-2-1150, Engineering and Design - Engineering and Design for Civil Works Projects

11. ER 1110-2-1806 Earthquake Design and Evaluation for Civil Works Projects
12. ER 1110-1-8152, Engineering and Design – Professional Registration and Signature on Design Documents
13. ER 1110-1-8155: Engineering and Design – Specifications
14. UFC 1-200-01, DOD Building Code

Industry references include:

1. AISC Structural Steel Design Manual, 15th edition - including AISC 360, ANSI/AISC 303, and RCSC Specification for Joints using High-Strength Bolts.
2. ACI 318-14, Building Code Requirements for Structural Concrete
3. AWS Structural Welding Codes as required for materials – including AWS D1.1 for steel, AWS D1.5 for HSS.

8.3. Intake Screens/Trashracks

Intake screens on the upstream side of the project are required to both prevent debris from entering the system and to permit fish bypass through a safe screen opening. The goal of the screen system is to minimize the potential for fish and debris collision while permitting the MIS to dewater the flow as described in Section 9 below.

8.3.1. Design

Intake screens will be designed to fit in the current screen intakes with added smaller screens in the secondary screen slots utilizing smaller spacing to accommodate both debris and fish passage. Screens will be designed for debris blockage with an assumed 10 feet of differential head. The screens will be designed using tapered vertical beams to train flow and minimize hydraulic disturbance similar to the 95% design currently in place. Horizontal bars will be spaced at 24” on center with vertical bars spaced at 10” on center for the 12’-0” open span between vertical support columns.

Analysis of differential load on the structure showed that a deeper section than envisioned in the 95% design is required to prevent excessive deflection of the screen structure with debris blockage. Excessive deflection can prevent the trashrack from being removed when necessary.

To minimize deflection and ease handling and installation, the trashracks have been designed as square sections which are 12’-4” wide and 12’ tall. Each rack will weigh approximately 4,700 lbs. A total of 30 racks will be required with a total fabricated weight of 141,000 lbs of steel. The racks will be fabricated from carbon steel and coated with vinyl paint for corrosion protection.

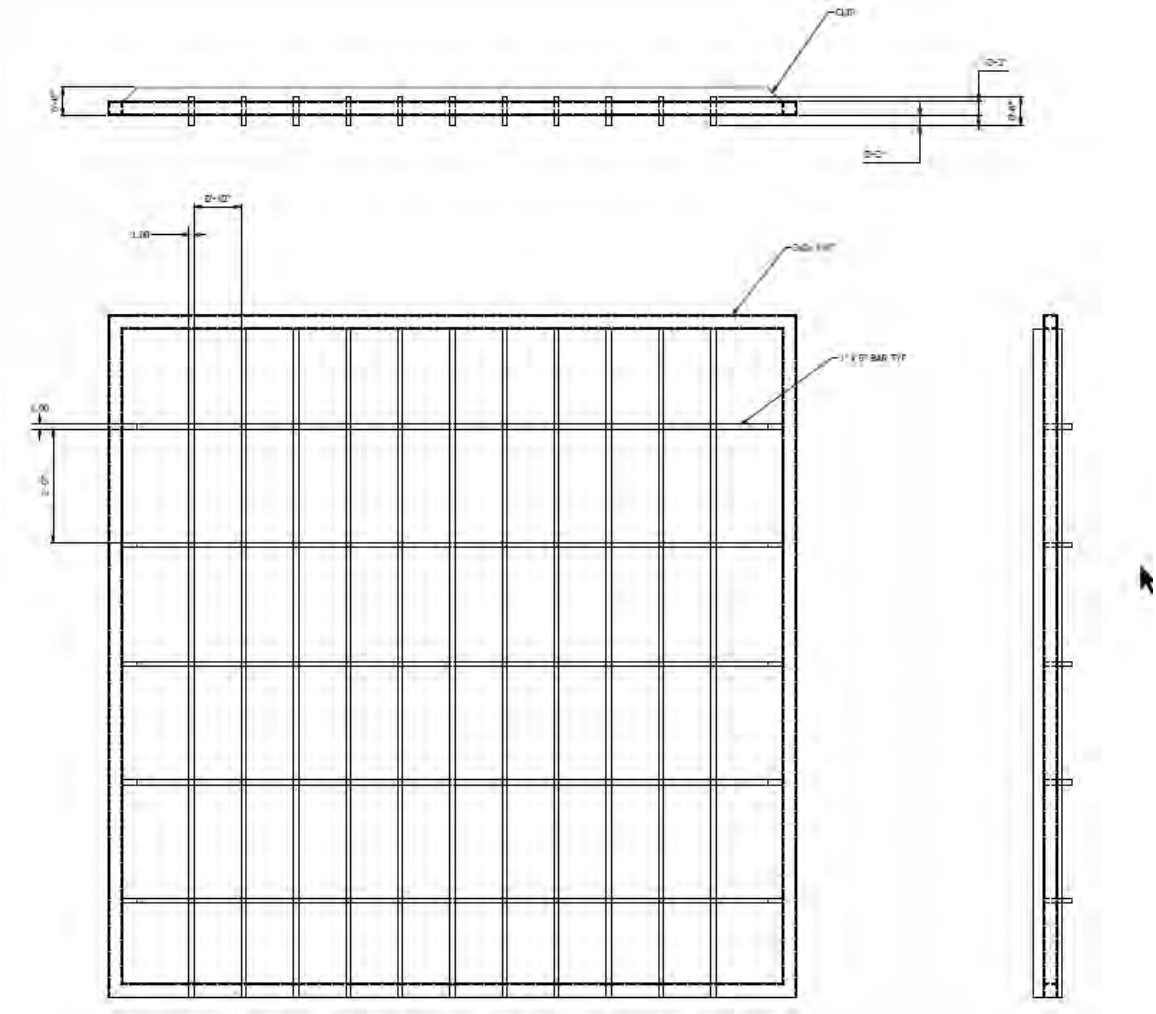

Figure 8-1: Typical Trashrack Section

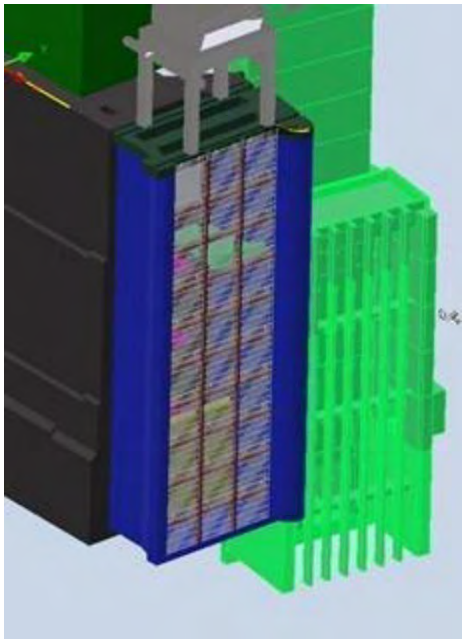

Figure 8-2: Trashracks installed in existing cofferdam trashrack guide slots

8.3.2. Fabrication

Intake screens will be fabricated to hydraulic steel structures fabrication criteria (EM 1110-2-2107) to minimize intersecting welds and prevent the potential for fatigue and fracture caused by dynamic loading on the trashrack bars.

8.3.3. Maintenance

Trashracks will be cleaned by a trash dipping operation as described in section 9. Trashracks will be designed as removable for repairs as necessary to ensure the required design life.

8.4. Dewatering Bulkheads

Dewatering bulkheads are required to permit the dewatering of the intake structure to permit maintenance and debris removal. Dewatering bulkheads are described in detail in section 9 below. Bulkheads have been designed as interchangeable units assuming dewatering at maximum pool elevation.

8.4.1. Design

Dewatering bulkheads are designed to be deployed in a static load/equal head situation assuming the downstream gate is closed. The bulkhead will be installed and the space between the bulkhead and the downstream gate will be dewatered. The design places the skin plate in tension on the downstream side and multiple horizontal girders on the upstream side of the gate. The girders taper down to a nominal 9” depth at the ends to minimize the slot width and minimize hydraulic disturbance at the intake structures.

8.4.2. Fabrication

Dewatering bulkheads will be fabricated to hydraulic steel structures fabrication criteria to minimize intersecting welds and prevent the potential for fatigue and fracture following UFGS 055920. The structure will be welded to AWS D1.5 criteria with strict dimensional tolerance controls to ensure the bulkhead will properly seal. Fabrication will be detailed to utilize a skin plate with built up plate girders spaced 2’-2” on center to permit access for welding and inspection. A total of two bulkheads will be required to permit the dewatering of two horns at any one time. The bulkheads will be deployed utilizing the crane and a pendant system. Including a 10% allowance for paint and welds the overall weight of each bulkhead is approximately 60,400 lbs.

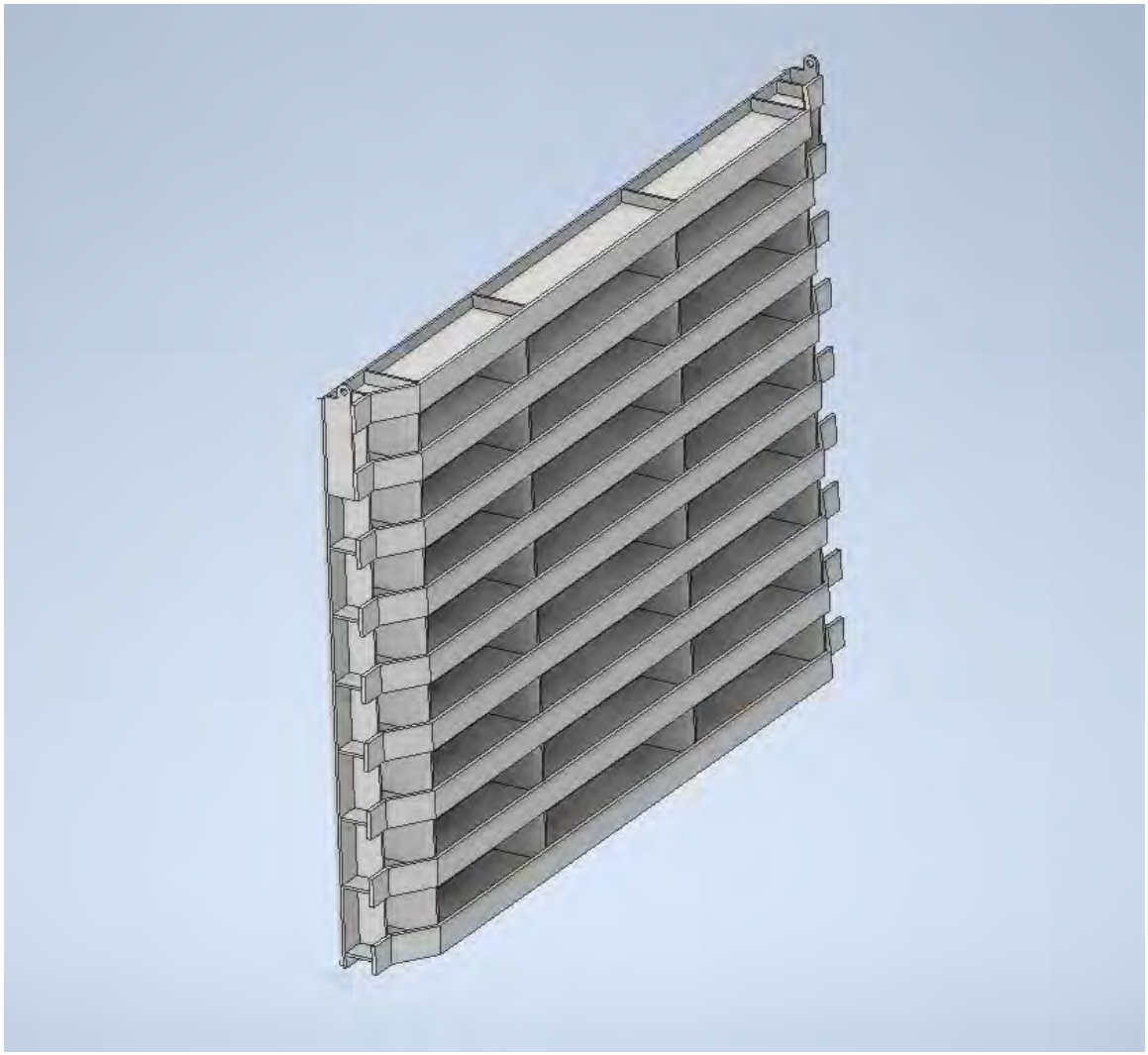

Figure 8-3: Dewatering bulkhead isometric view

8.4.3. Maintenance

Dewatering bulkheads will be stored in a storage slot accessed from the 1181' working deck or stored on top of the 1181' deck. Maintenance will consist of seal replacement and repainting on 25-year intervals. In accordance with ER 1110-2-8157 "Responsibility for Hydraulic Steel Structures" the bulkhead will be subjected to an in-depth HSS inspection at five year intervals.

8.5. Multiport collector with 5 fish horns

The multiport collector and fish horn structure is a reinforced concrete hydraulic structure similar to the 95% plans and specifications. The internal lining of the structure will be composed of a high velocity concrete finish to prevent roughness and damage caused by debris. This will be a 5000 psi high velocity finish concrete cast against a mass concrete structure for many portions of the intake. Mass Concrete requires additional refinement during design. Thermal analysis of the concrete mix is expected to be required during construction, construction sequencing may be required to take internal temperature into account, and the construction schedule needs enough time to ensure the thermal gradient of the concrete remains acceptable. This information will be investigated during design. The structure is designed to be dewatered to permit maintenance throughout the year in the event of mechanical equipment failure or screen cleaning requirements. Two dewatering bulkheads will be provided to perform maintenance during high water periods if necessary.

8.5.1. Design

The structure is designed to withstand dewatered buoyant loading as well as seismic loading to ensure a stable structure for all design load cases. A mass concrete base ensures the structure remains stable for all load cases.

8.5.2. Construction

The foundation of the structure is a mass concrete foundation with reinforced concrete walls and slabs. All walls and slabs will be formed from cast in place reinforced concrete. Typical 5000 psi reinforced concrete will be used for all wall and slab construction except in those areas exposed to high velocity flow including the intake/horns and full flow bypass structure where additional finishing techniques will be required to provide a fish friendly surface for the horns.

8.6. Full Flow Bypass Structure

The full flow bypass structure is a reinforced concrete channel structure, with one channel coming from each of the five fish horns. The reinforced concrete channels will be supported within a reinforced concrete tower. The 5 separate bypass channels are combined downstream of ogee transition sections into 2 channels as previously depicted. Once combined, the full flow bypass will transition to a tunnel section permitting the full flow bypass to exit downstream at the stilling basin. The structure will be accessed from the downstream end allowing inspection along the full length.

8.6.1. Design

The full flow bypass structure conduit will be designed for full pressure due to hydrostatic and velocity head within the conduit to ensure conduit performance with a fully pressurized conduit or a dewatered conduit. The conduit will be lined with high velocity concrete to create a smooth surface to prevent a hydraulic jump from occurring over the life of the structure as erosion and increased roughness occur. The structure will be

reinforced around the perimeter to permit full pressurization from the maximum forebay elevation during a flood event.

The full flow bypass will transition to a horseshoe concrete structure which contains both fully flow bypass tunnels and the primary bypass piping.

8.6.2. **Construction**

The conduit will be constructed using typical formed concrete construction techniques. Shoring and framing will be required to support the structure during concrete placement. Initial rough openings for the full flow bypass will be formed in the mass concrete placement. The final bypass concrete lining and reinforcement will be a secondary concrete placement with steel lined slip forms followed by high velocity concrete finishing. Waterstops will be installed at construction joints every 25 feet to prevent cracking and leakage.

8.6.3. **Maintenance**

The structure should be maintenance free for the life of the structure. Construction and contraction joints utilizing water stops will be installed to prevent leakage. Should roughness develop over time due to high velocity flow the bypass can be lined with epoxy.

8.7. Steep Slope Primary Bypass Flumes

The primary bypass consists of a series of stainless steel flumes that convey fish from each collector horn to the entrance of the deceleration tunnel. At the outlet of each of the 5 collectors is a mostly horizontal lateral flume. These 5 lateral flumes merge into a junction flume oriented at a 45-degree angle that leads downwards and discharges into the top “V” shaped chamber of the deceleration tunnel. The lateral flumes are “U” Shaped flumes with a 16-inch bottom diameter with an overall height of 36 inches. The junction flume is a “V” shaped flume with a rounded bottom with a 16-inch diameter. The overall width at the top of the “V” is approximately 100 inches with an overall height of approximately 70 inches. In order to provide a smooth flow transition between the lateral and junction flumes, the lateral flumes sweep over a large turning radius to meet tangent to the junction flume at their inverts. See the mechanical section below for more detail on the flume geometry. Theses flumes are embedded in concrete over from nearly the outlet of the collector down through the inlet of the tunnel. As a result, no dedicated support structure is required.

As the primary bypass piping exits the collector structure through the open excavation the flumes will be incased in the concrete channel sections identical to the rock channel lining containment structure depicted below. Containing the flumes in the concrete structure will provide additional protection from embankment erosion should a leak occur in any of the pipes. Encasing the flume in reinforced concrete will also allow the open excavation to be backfilled without concern for protecting them.

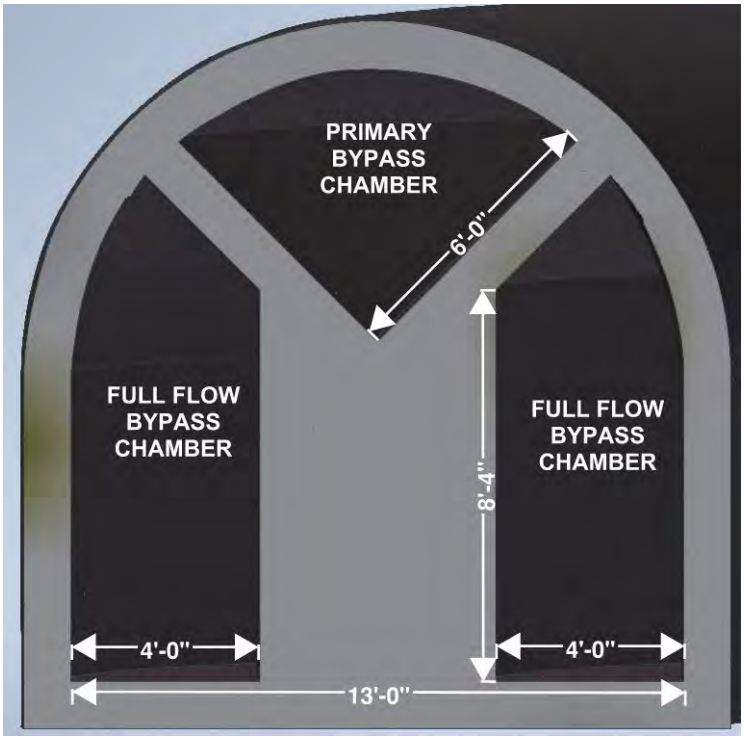

Figure 8-4: Tunnel Cross Section

8.7.1. Design

Flume sections are fabricated from 3/8” type 304 stainless steel plate. The flumes will be completely enclosed with plate and welded such that they are watertight and rated for the full forebay water pressure. They will be completely embedded in mass concrete.

8.7.2. Fabrication

Flumes will be fabricated from bent stainless steel pipe for the radiused portions of the flume sections and flat plate for the flue walls. . Special bending fabricators will be required to roll/bend piping and plate to the required radii to prevent a hydraulic jump from forming. Specialized fabrication techniques will be required to roll the primary bypass flumes. Companies such as Chicago Metal Rolled Products, https://www.cmrp.com/pipe-bending-services will be utilized to form these bends.

8.7.3. Maintenance

The flumes will be stainless steel in order to last the required design life of the structure. Inspection access is required for fisheries purposes and will be provided at the transition from the rectangular intake as well as at the outlet. The primary means of inspection will be via ROV with limited personnel access provided at hatches located within the intake structure and the free exit at the outlet works. Personnel will have access to view areas immediately adjacent to these access hatches or to deploy remote inspection equipment but will not have full personnel access due to confined space limitations and safety concerns.

8.8. Tunnel Lining

The tunnel excavation will need to be lined to prevent erosion and improve the surface roughness in order to prevent hydraulic jumps from forming. The tunnel will be lined with reinforced concrete placed with a slip form technique. The tunnel lining will consist of a

12” thick reinforced concrete lining on all faces of the tunnel with a high velocity finish. During design, the construction sequence will be further investigated. If a single pour is not feasible, construction joints will be designed to ensure they are in non-critical locations. The pdt is aware that the divider structure within the tunnel will likely require specialized forming and placement techniques.

8.8.1. **Design**

The tunnel lining will be designed for full hydrostatic pressure plus velocity pressure to prevent concrete damage for the design life of the structure. The design will conservatively assume a dewatered conduit is fully charged with external pressure. The surrounding rock mass may not be capable of creating this fully charged condition, but previous tunnel design experience at Mt St Helens and at Seven Oaks Dam in Los Angeles district suggest that external hydraulic pressure is likely to be present within the rock mass.

8.8.2. **Construction**

The tunnel lining will be constructed with reinforced concrete using a slip from construction technique. Rock anchors and a 6” minimum shotcrete surface will be applied to protect the rock excavation prior to final reinforced concrete placement. The team currently assumes the same design as the Attraction Water Conduit (AWC) tunnel design from the 95% design for cost estimating purposes: untensioned 8 to 15 foot long, Number 9, Grade 75 threaded bars placed on 5-foot spacing both radially and longitudinally. Anchors/dowels in the bottom slab of the tunnel lining will be required to prevent cracking and resist hydrostatic uplift forces resulting from external hydrostatic pressure and high velocity flow through the conduit.

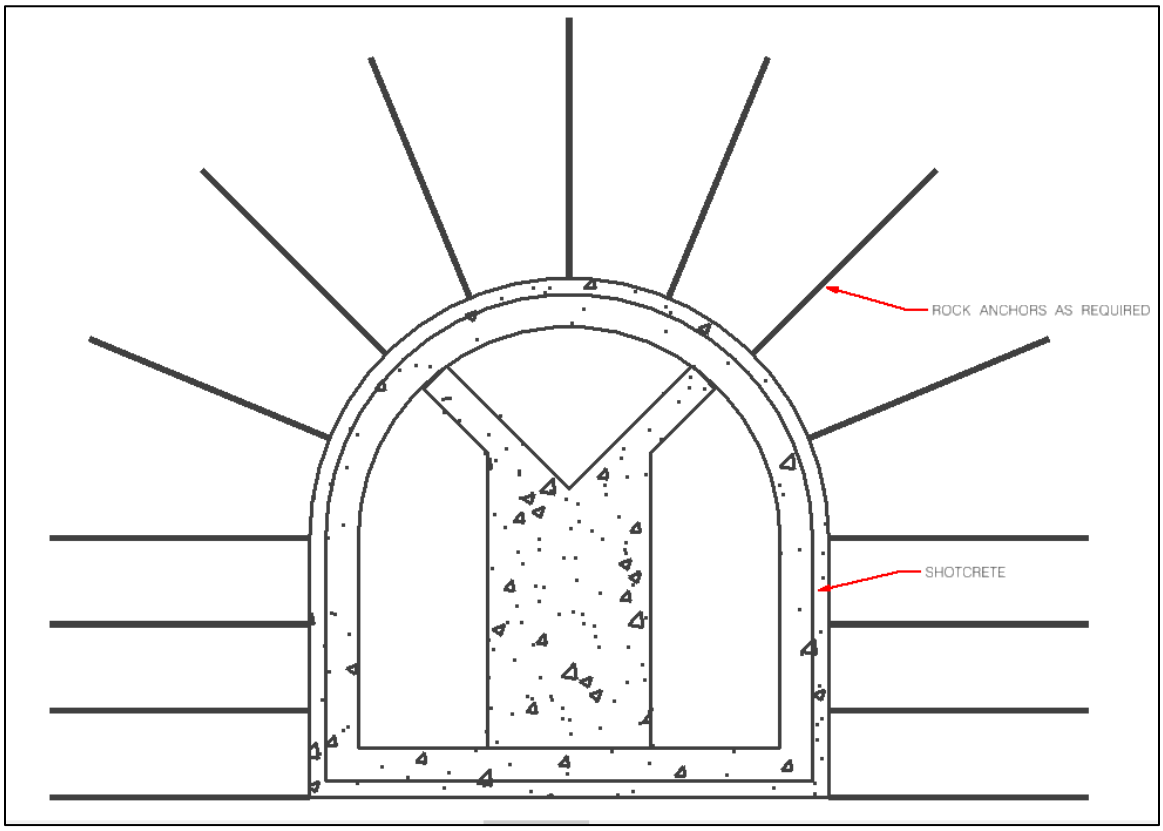

Figure 8-5: Expected Rock Anchor configuration

8.8.3. Maintenance

The tunnel lining can be inspected in a fully dewatered condition with upstream bulkheads and gates. Maintenance will consist of joint seal repairs through the life of the structure.

8.9. Concrete outfall structure and Stilling Basin

The reinforced concrete outfall structure is essentially a slab on grade end sill stilling basin structure at the exit of the full flow bypass. The structure is a reinforced concrete stilling basin designed to reintroduce flow into the river without detrimental effects on river flows and the adjacent river channel.

The outlet structure is designed for full uplift dewatering as required for inspection and maintenance at low tailwater elevations. The structure will be designed for seismic stability to ensure continued operation of the facility after a seismic event. The walls and slab of the outlet structure have been designed for soil and hydrostatic pressure, including uplift loads for both the static and dynamic load cases.

8.9.1. Construction

The reinforced concrete structure will be constructed from typical cast in place/formed concrete with a high velocity finish to minimize the surface roughness and prevent a hydraulic jump from forming over the life of the structure.

8.9.2. Maintenance

The structure should require minimal maintenance over the life of the structure. Debris cleaning may be required after high tailwater events.

8.10. Primary bypass piping and outfall

The primary outfall piping will be extended several hundred feet downstream from the full flow bypass stilling basin. Extending the outfall structure to a further location downstream will ensure that the outfall location provided safe egress for fish.

To accomplish this, the primary V-shaped bypass will transition into a 4’ diameter outfall pipe which extends 200 feet downstream of the full flow stilling basin. The pipe is continuously supported along the outfall structure for the first 50 feet transitioning to a pile/pier supported structure with piers spaced 55 feet on center. The final section of the outfall piping will cantilever 15 feet beyond the last pier to allow fish to enter into the plunge pool at the proper velocity and location.

8.10.1. Design

The outfall pipe will be supported on concrete piers either founded in the rock foundation or cast into spread footings depending on foundations conditions encountered. The design of the outfall piping must consider the effects of gravity, wind, and seismic loadings.

8.10.2. Construction

The outfall pipe support structure will be constructed like recent outfall structures constructed in the Walla Walla District as shown in the following figure. Where founded within the spilling basin structure the reinforced concrete piers will be formed into the stilling basin slab foundation an anchored into the rock foundation below. Where the outfall structure extends downstream beyond the stilling basin either spread footings or rock sockets will be utilized depending on foundations conditions encountered.

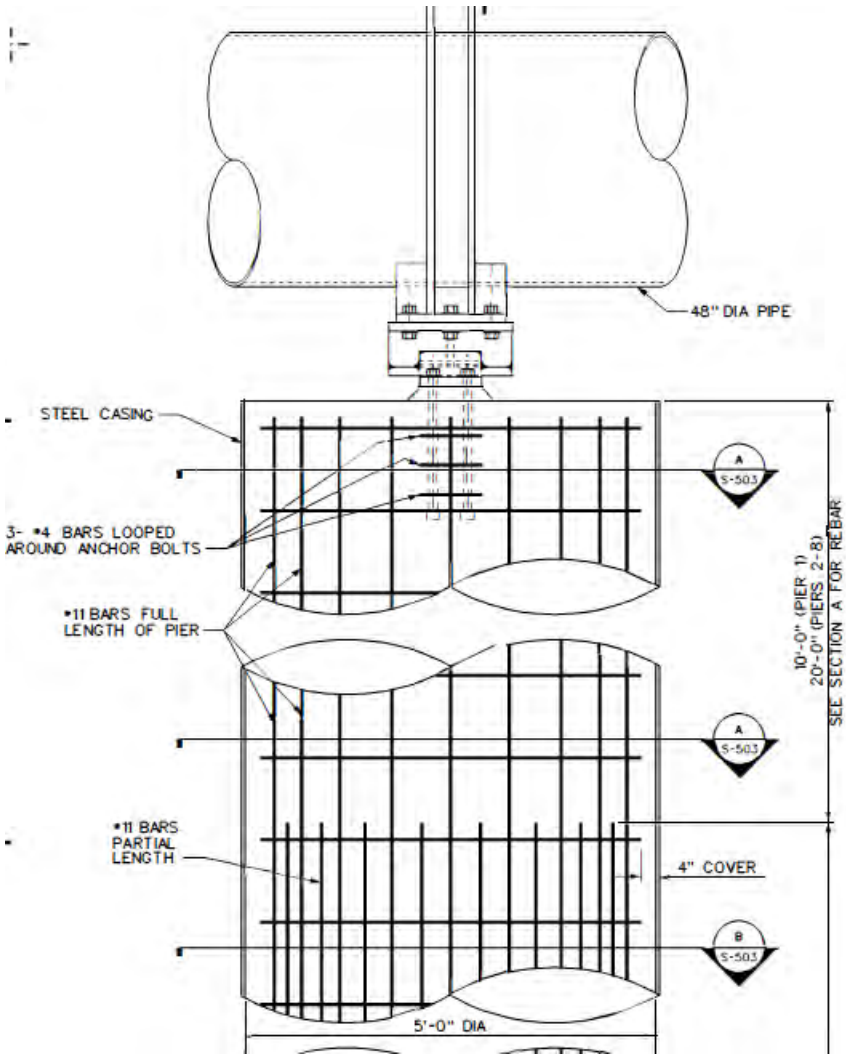

Figure 8-6: Typical concrete pier support structure

8.10.3. Maintenance

The outfall pipe structure will require minimal maintenance other than inspection and coating over the life of the facility.

8.11. Project Access for inspection and maintenance.

The project will be designed to provide access to key sections of the structure for inspection and maintenance.

Intake Ports/Horns - The horns will be designed to be fully dewatered at all pools with an access hatch to permit inspection and the cleaning of debris. This location will be protected by an upstream bulkhead and downstream control gate. This access will be considered a confined space accessed by water-tight doors similar to a regulating outlet.

Primary Bypass – the steep slope bypass will be provided with access hatches along the length to permit inspection via remotely operated underwater vehicles while watered up, or by pipe crawler when dewatered.

Full Flow Bypass – the full flow bypass steep slope section will be provided with access hatches in several locations for both personnel access for maintenance and inspection..

Tunnel Lining – the tunnel will be inspected from access hatches in the upstream end or downstream open exposed end of the tunnel similar to other tunnel outlets in the USACE inventory. An upstream bulkhead and redundant gate closure structure will provide safe access to these locations.

Outfall Structure – The concrete outlet stilling basing will be exposed with access at low flow/low tailwater conditions. If required, downstream stoplogs can be designed and installed to permit stilling basing inspection and maintenance. Due to the presence of an existing access road crossing in this location as well as the need for access to the structure a bridge crossing will be required over the stilling basin. A bridge structure composed of precast concrete post tensioned slabs with a concrete topping slab will be provided with approach ramps and Washington DOT Type F barriers. The bridge is designed to span across the outfall structure and is designed for HL-93 live load as well as outrigger loading for a typical 50 ton RT crane to provide personnel basket access to the outfall structure for inspection and maintenance. The use of the bridge structure and additional compression struts between the outfall walls will likely be required to permit the 30 foot tall cantilever walls with added surcharge loads from the crane loading. The figures below and cost estimate utilizes a similar design taken from the Bonneville Corner Collector Outfall Structure crane access slab design.

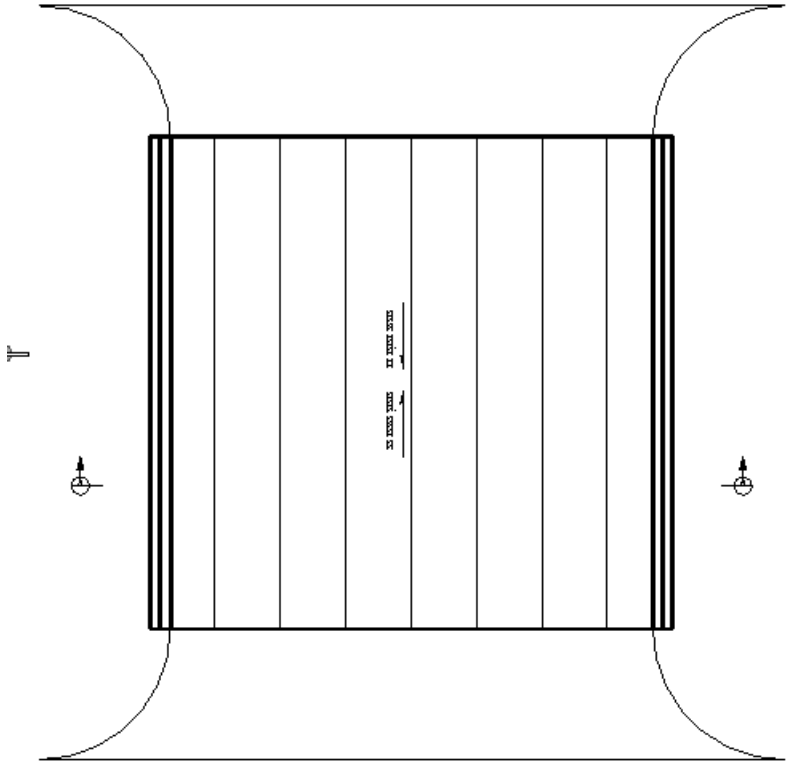

Figure 8-7: Bridge Typical Plan

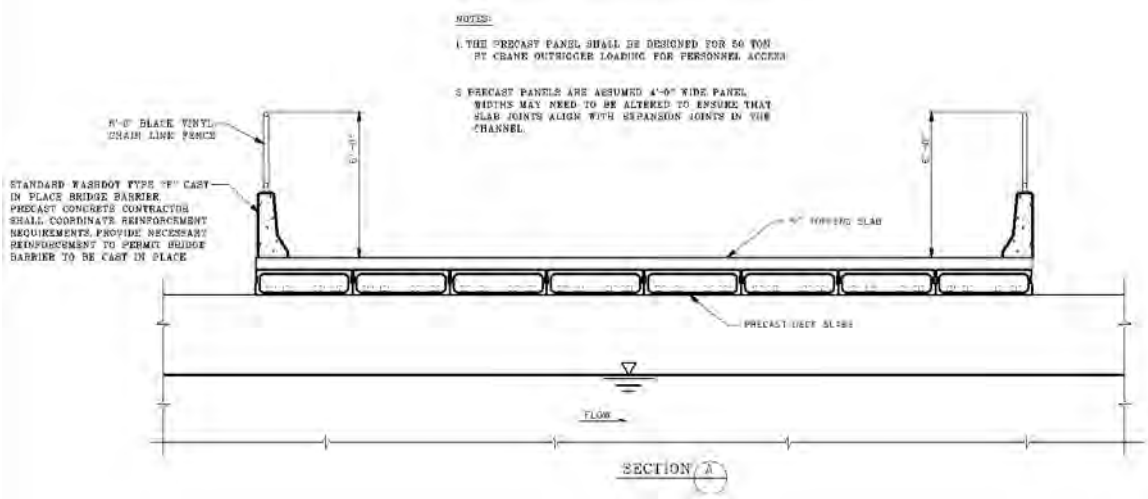

Figure 8-8: Typical Bridge Cross Section

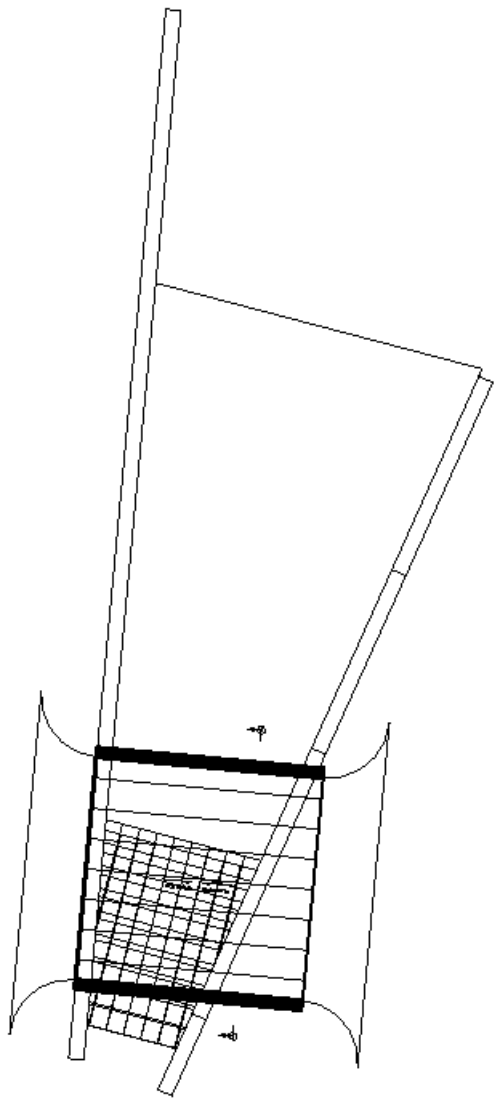

Figure 8-9: Precast slab bridge over outlet stilling basin

8.12. Structural Stability Analysis

Structural stability analysis of the completed structure was analyzed for static and dynamic loading considering the potential for an MDE earthquake event. The structure was analyzed in the upstream/downstream direction for an effective peak ground acceleration of 0.197g (EPGA = 2/3PGA for stability analysis per EM 1110-2-2100). Evaluation of stability analysis shows that sufficient factor of safety exists for the proposed structure. Floatation analysis provided factors of safety exceeding 2 for all required load cases in accordance with EM 1110-2-2100.

Evaluation of the structure in the short/narrow direction is not considered appropriate for stability as the structure is confined within the rock abutment excavation. Backfill will be present on both sides of the structure, which will create seismic forces on the structure. However, the seismic loading will result in the need to perform a strength evaluation of the structure versus a stability evaluation. Strength of the structure to resist a seismic event will be provided by additional concrete reinforcement as necessary to be evaluated during design.

9. Mechanical Design

9.1. Mechanical Design Criteria

The requirements for the mechanical design criteria to be provided in this Engineering Appendix to this Feasibility Report are found in ER 1110-2-1150 paragraph 8 and Appendix C. As such, the complexity of the analysis is limited in size and complexity. Each type of equipment will have functional design requirements, technical design criteria, and technical basis. The design criteria will need to keep in mind the plan for operation, maintenance, repair, replacement, and rehabilitation of all features of the project.

In general, the design of the mechanical system for the facility will focus on ways to improve maintenance and simplify operation. To this end, where practical, connection will be bolted instead of welding and consumer off-the-shelf components will be used in favor of custom fabricated components.

Functional design requirements are primarily found in the Anadromous Salmonid Passage Facility Design (July 2011) that was produced by National Marine Fisheries Service (NMFS) Northwest Region. Any deviation from specific standards must be cleared by a written waiver from NMFS.

USACE Technical Design Criteria include the following locations:

- EM 1110-2-2610 Mechanical and Electrical Design for Lock and Dam Operating Equipment
- EM 1110-2-1610 Hydraulic Design of Lock Culvert Valves
- EM-1110-2-2902 Conduits, Pipes, and Culverts associated with Dams and Levee Systems
- EM 1110-2-3105 Mechanical and Electrical Design of Pumping Stations
- EM 1110-2-4205 Hydroelectric Power Plants Mechanical Design
- EM 385-1-1 Safety and Health Requirements
- EM 1110-1-4008 Liquid Process Piping
- ETL 1110-2-584 Design of Hydraulic Steel Structures

- UFC 3-420-01 Plumbing Systems
- EM 1110-2-2400 Structural Design & Evaluation of Outlet Works
- EM 1110-2-1602 Hydraulic Design of Reservoir Outlet Works

Other sources include:

- Bureau of Reclamation Water Resources Technical Publication ‘Fish Protection at Water Diversions’ (2006)
- Fish Passage Engineering Design Criteria (2019) US Fish and Wildlife Service Northeast Region
- American Water Works Association (AWWA) C520-19 Knife Gate Valves, Sizes 2 in through 96 in
- American Water Works Association (AWWA) M72 Knife Gate Valves
- Crane Manufacturers Association of America (CMAA)
- International Plumbing Code (IPC)
- Anadromous Salmonid Passage Facility Design (NOAA 2011)

9.2. Unwatering Bulkheads

Criteria	ETL 1110-2-584	
Function	Operational (collectors)	Dewatering (cofferdam)
Size	24’ wide x 17’ high Weight approx. 60,000 lbs	36’ wide x 10’ high (one 9’ high) 57,800 lbs
Qty	2	11
Material	Carbon Steel (Painted)	Carbon Steel (Painted)
Risks	There are two bulkheads to be deployed in a single slot, so if one is deployed, the second cannot be deployed to a lower horn without removing the first Access for lifting the bulkheads may be challenging, the intake gantry crane will need to be arranged to access the bulkheads. Bulkhead slots will need to be as narrow as possible for biology and hydraulics.	Need to remove existing stoplogs Heavy equipment is required to transport between the storage location and the unwatering slot. Access for this equipment may be challenging.
Notes	Both need lifting beams. Collector bulkhead will use multiple pendant links to position bulkhead. This will require a means to support and transfer load at the intake deck. Cofferdam Bulkhead storage location requires heavy duty forklift.	

9.2.1. Design

Collector Unwatering Bulkheads

The collector unwatering bulkheads will be used to unwater an individual collector horn if maintenance is required. The intent will be to allow any other horns to operate while one is being maintained. The bulkhead will be located in a single slot that runs adjacent to the upstream face of the collector. The bulkheads will seal on the skin plate side that will match up to the upstream face of the collector. It will seal with Teflon clad neoprene J-bulb seals. An embedded stainless steel sealing face will need to be provided around the perimeter of each collector horn opening. The bulkheads will be designed for a differential head of 160 feet. They will be fabricated from carbon steel and painted with a vinyl paint system. See Figure 9-1 below for the general framing arrangement of the

bulkhead. See Figure 9-2 below for a section view of the collector horn with the bulkhead installed. Here the bulkhead is installed in a slot immediately upstream (to the right) of the horn entrance.

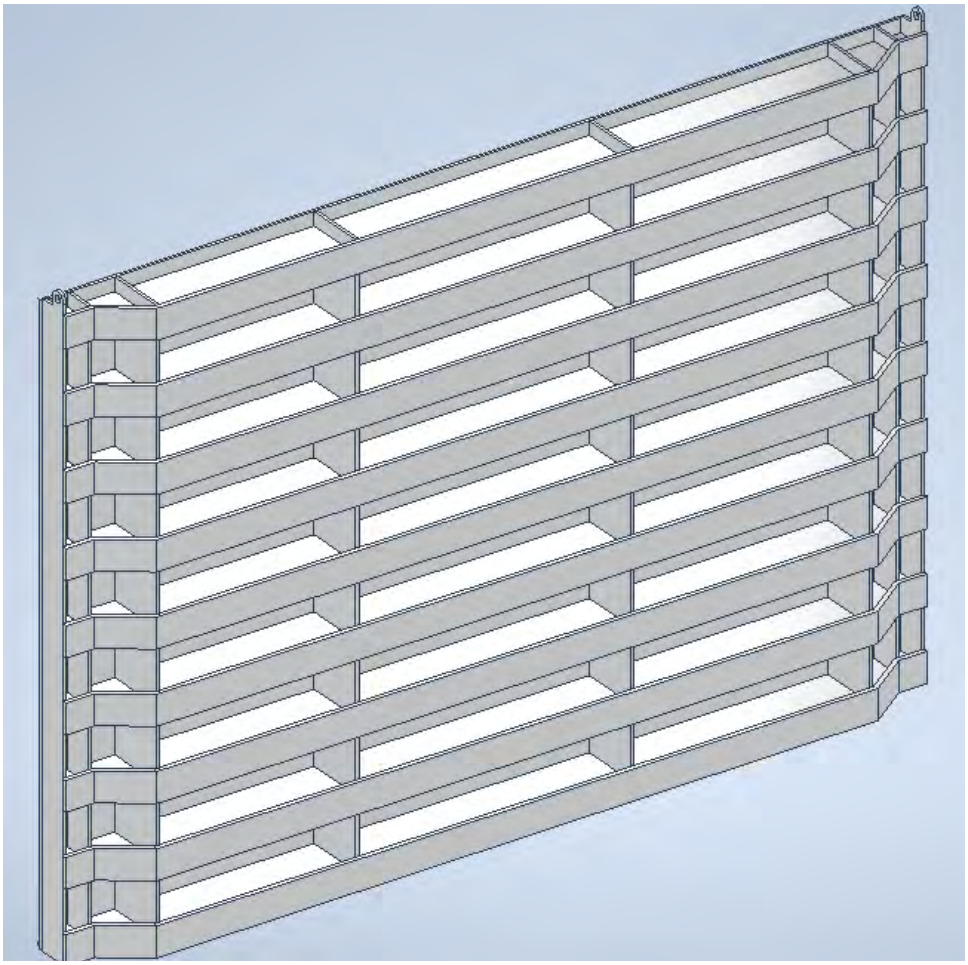

Figure 9-1: Collector Unwatering Bulkhead

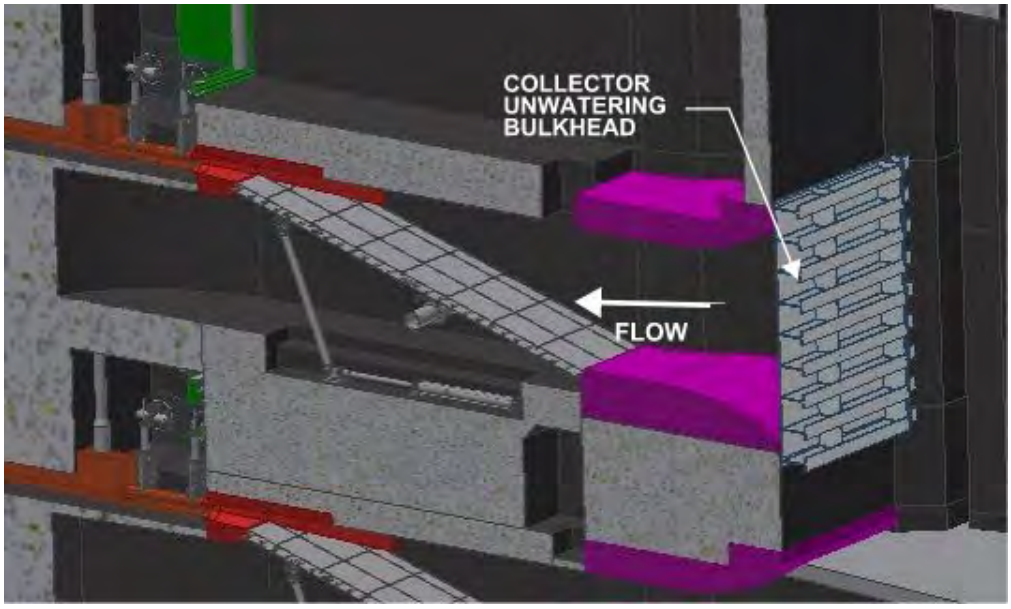

Figure 9-2: Unwatering Bulkhead Installed

Two bulkheads will be provided in order to unwater two separate collector horns. However, there will be some limitations due to the presence of only a single guide slot. A second horn can be un-watered only if it is above the first un-watered horn since the second bulkhead will not be able to get past the first. So, if collector 3, the middle horn, is un-watered and collector 4, an upper horn, is operating and needs to be un-watered then the second bulkhead may be deployed. However, if collector 2, a lower horn, needs to be un-watered then collector 3 will need to be watered up to remove and lower the bulkhead.

The presence of a single slot also means that two different bulkheads are required. In order to allow the upper bulkhead to pass between the ropes supporting the lower bulkhead, the upper bulkhead will need special design considerations. This includes different rope spacing and end guides that can straddle the lower bulkhead rope. The upper bulkhead will also need to have UHMW guides at corners to prevent the bulkhead from cutting the ropes of the lower bulkhead as it is being deployed. These details will be further developed during the design phase.

While this arrangement is not convenient and results in limitations on which horn can be de-watered, it is deemed as acceptable due to the unlikeliness that multiple horns will need to be un-watered. The need to remove a second horn from service, while rare, is still a possibility that will be addressed with the presence of a second bulkhead. A single horn may need to be taken out of service periodically but it is considered rare to need to remove a second from service and rarer still that a third will run into trouble.

The intake gantry crane will need to be arranged to handle these bulkheads. The bulkhead slot lies downstream of the crane rails, so the crane will need have some means to handle equipment at this location but still be able to pass by the existing outlet tower. These details will be further developed during the design phase.

Note: The operational bulkheads were not part of the 95% design. The 95% DDR indicates that operational bulkheads were planned to be installed downstream of the IFS and operated by hydraulic actuators. Originally it was mentioned that the design team had located the bulkheads upstream of the IFS but this idea was scrapped for reasons unknown.

Cofferdam Un-watering Stoplogs

The cofferdam un-watering stoplogs are present in order unwater the entire excavation to facilitate the construction of the new downstream facility. They would be installed in the slot in the existing cofferdam structure. There are 11 stoplogs each approximately 10' high that are stacked in the cofferdam structure. stoplogs would be carbon steel with seals on the perimeter. Structures will need to be painted with a vinyl coated system to prevent long term corrosion damage.

The bulkheads are a life safety risk since failure of a bulkhead could imperil occupants in the dewatered area. Many components can be classified as Fracture Critical Members (FCMs). The collector unwatering bulkheads and the dewatering stoplogs will each need a lifting beam designed to ASME B30.20-BTH-1.

The size of the stoplogs makes them inconvenient to store on the cofferdam structure. There is a potential storage location on the adjacent bank. See Figure 9-5 for the relative location of this storage area. However, being able to transport such large structures between the slot and the storage location may be challenging.

There is an existing set of stoplogs that was provided along with the cofferdam structure that was used to perform the initial excavation. However, it is anticipated that these are no longer in suitable condition. They have been in place and inundated for over a decade, so a new set of stoplogs will be provided along with the new facility. See Figure 9-3 for a photo of a typical unwatering stoplog.

Figure 9-3: Typical Unwatering Stoplog

9.2.2. **Operations**

Collector Unwatering Bulkheads

The collector unwatering bulkheads would be deployed when a collector horn needs to be either maintained or repaired while adjacent horns can remain in operation. The bulkheads cannot be deployed under flow, so flow through the facility will need to be temporarily interrupted while the bulkhead is placed. Flow through the horns can be stopped by closing the primary bypass gates and the full flow bypass gates. The bulkhead would then be lowered into place using the intake gantry crane. The bulkheads would be suspended using wire rope pendants connected to a support beam. Different length pendant segments would be provided depending on which horn needs to be un-watered. A segmented line is required due to limited overhead clearance on the crane.

The bulkhead would be lowered as allowed by the first pendant then supported by a beam. The crane would then disconnect and bring in another segment then unload the support beam and continue to lower the bulkhead. This process would be repeated as required to reach the necessary horn. The collector would then be un-watered by opening the full flow bypass gates. At this point the flow through the adjacent horns could be re-established.

After maintenance has been completed it will be necessary to water up the horn in order to balance the pressure on the bulkhead to allow its removal. A raw water pipe system will be provided for various maintenance activities. This system will be fed from the forebay. Taps from this system will connect to each of the horns in order to facilitate this watering up process. Once pressure across the bulkhead has been equalized, the bulkhead can be removed and returned to its storage position.

Cofferdam Unwatering Stoplogs

The collector unwatering bulkheads would be installed for extensive repairs or maintenance where the entire facility needs to be un-watered. The stoplogs will be typically stored in a designated area adjacent to the facility, as shown in Figure 9-5 below. A mobile crane or forklift will be needed to move the stoplogs from the storage position to a location that can be reached by the intake gantry crane. The crane would then pick the stoplog and lower it into the unwatering slot. This process would be repeated 10 more time until the entire stack is raised. These stoplogs cannot be placed under flow so this process would need to be done without flow passing the facility. This would be accomplished by closing all the primary bypass valves and all the full flow bypass gates. After the stoplogs have been placed the facility would be un-watered by opening the lowest collector full flow bypass gate. The means of transporting the stoplogs between the storage location and the intake structure needs to be provided along with the facility.

Even with the storage location being adjacent to the structure, the number of stoplogs and the need to transport and rig each of them means that this process will be time consuming. It may take between two and three days to set the stoplogs. This is not expected to be a problem since full facility unwatering will likely only be required during annual maintenance periods.

9.2.3. **Maintenance**

Bulkheads and lifting beam will need periodic lubrication and painting. The design of the intake deck needs a location to place the bulkheads for maintenance.

The cofferdam stoplogs and lifting beam will need a dedicated storage area that is dry and accessible by the crane. A location for the storage area of the dewatering stoplogs is located on the 1181 level next to the existing retaining wall. These will need to be moved by forklift (30 T) to and from the storage area. The 95% design has storage racks for the cofferdam unwatering stoplogs. The collector unwatering bulkheads will be stored, dogged in the slots upstream of the collector structure.

Both structures will need periodic HSS inspections. These are typically done on a five-year cycle.

Figure 9-4: Stoplog Storage Location Photo

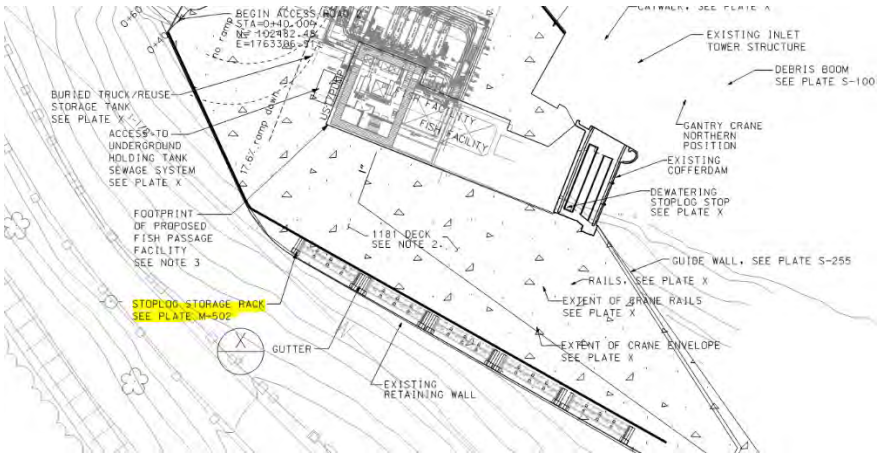

Figure 9-5: Stoplog Storage Location Drawing

9.3. Intake Crane

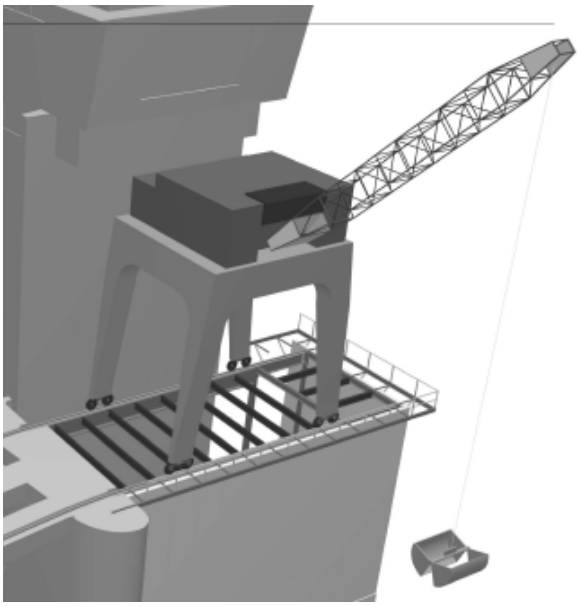

Figure 9-6: Intake Crane

Criteria	CMAA
Size	50 Gantry, 15T Boom at 50 ft
Requirements	• Gantry to raise 30T Unwatering Bulkhead in slot 146 feet (1035’ to 1181’) • Gantry to raise 30T stoplog from intake slot 146 feet (1035’ to 1181’) • Boom for collecting debris with a grapple or clamshell (rated for 10T at 50 feet boom length, 15T at 25 feet). Includes hold line. • Gantry Travel about 125’ • Gantry to raise 45 ton bulkhead for existing regulating outlet.

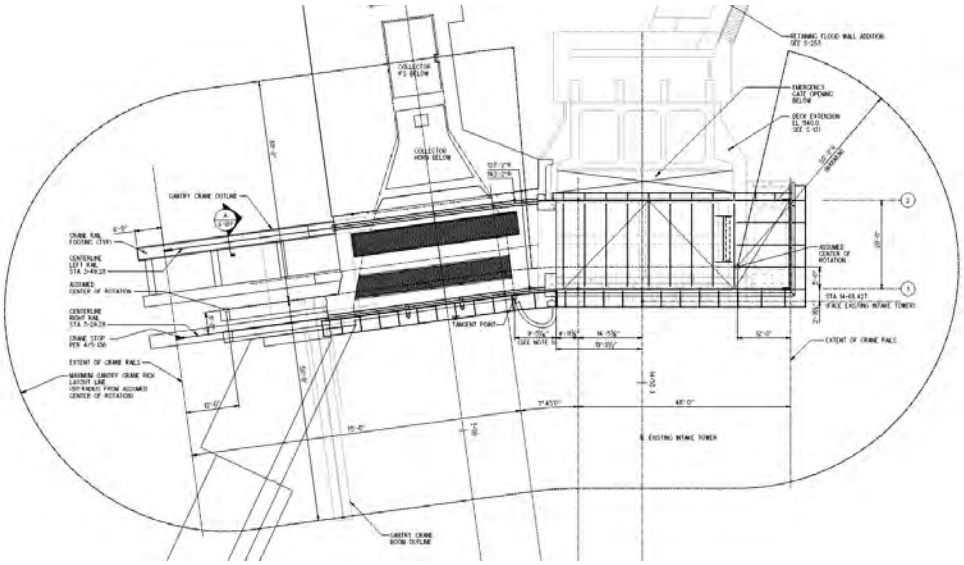

Figure 9-7: Intake Gantry Crane Coverage Diagram

9.3.1. **Design**

An intake gantry crane will be provided in order to support both the new fish passage facility and the existing regulating outlet structure. For the new facility the crane will be required to place the collector unwatering bulkheads and the cofferdam unwatering stoplogs in addition to collecting debris that accumulates along the intake trash rack. For the existing outlet structure, the crane will be used to place an emergency gate for the regulating outlet and a bulkhead in front of the 4 foot regulating outlet bypass. The gantry crane main hoist should be rated for 50 tons. This will be sufficient to handle both the collector unwatering bulkhead and the cofferdam stoplogs each weighing approximately 30 tons and the regulating outlet emergency gate weighting approximately 45 tons. The derrick hoist should be rated at 15T at a radius of 50 feet for debris removal. These values are approximate and should be validated during design. The final component weights should be used to determine the crane rating and detailed calculations for seal friction and incidental sediment infill performed.

Special design considerations are required for handling the collector unwatering bulkheads because the slot for these structures lies downstream of the downstream rail. This rail, however, cannot be moved farther downstream without interfering with existing outlet tower. This consideration will be addressed in the design of the crane. Power for the crane could be provided either electrically using a runway conductor bus arrangement or via diesel generator.

It should be noted that the crane rails at the 1181 deck fall below the 100 year flood level. This will allow the crane to be flooded and potentially swept off its rails damaging the crane and downstream components. The design of the crane should make accommodations for this. Possible methods to secure the crane are a fortified “home” for the crane with anchors designed to restrain the crane. All moving joints on the derrick and the main hoist trolley should also be lockable.

An alternate to the gantry crane could be a large mobile crane. This may be useful for setting the bulkheads and stoplogs, but it may require overly frequent use if this mobile was used for clearing debris from the trashrack. There would need to be specific crane pads located around the intake deck for specific purposes to guarantee that those location could support the outrigger loads.

9.3.2. Operations

The gantry crane would operate infrequently to install and remove cofferdam stoplogs and outlet emergency gate. But, it would be periodically employed to set collector unwatering bulkheads and more frequently still for debris collection. A staging area would be provided on the south end of the 1181 deck for transferring the cofferdam stoplogs. This is an area where they could be deposited from the forklift that is within reach of the gantry crane.

The crane would be used to clear debris using a clamshell attachment. The crane boom as shown will be able to rotate 180 degrees allowing debris to be deposited on the deck or into a standby bin for removal. Since the deck will be rated for heavy traffic, a truck could be staged to allow fewer debris handling events. Debris will be taken off site to a suitable disposal area or place back in the river downstream of the dam as part of the existing mitigation measures. There are existing project areas specified for debris processing and disposal .Allowance for a future separate guided raking system is desirable to ensure trash racks are not damaged during raking activities. Crane hoist system will be rated for frequent heavy loading condition if operations can manage.

9.3.3. Maintenance

Crane maintenance would be accomplished on the south platform. Normal crane maintenance would include routine inspections, wire rope lubrication, drain and flush gear case oil, greasing pivot points, and generator maintenance.

9.4. Modular Inclined Screen (MIS)

Figure 9-8: MIS Screen in a Penstock

Criteria	BoR Fish Protection at Water Divisions
Size	11' x 27' long, inclined at 17 degrees
Qty	5
Requirements	• Hydraulic means to rotate screen • Maximum design load 10 feet of water • Maximum 6.0 fps conduit velocity • Fail-safe means to ensure screen rotation when clogged
Notes	• Consideration for MIS screen removal • May change design to move pivot point to upstream side of conduit to allow screen to lay flat • Will include pressurized air for an air-burst system to help with debris removal.

9.4.1. **Design**

The MIS screen was developed for hydroelectric applications, though it has been identified as a potential for fish passage and was part of the 95% design package. MIS screens have a rectangular shape, whereas similar Eicher Screens have an elliptical shape for circular cross-section conduits. The screen face has a rectangular (11' x 27') and is placed diagonally in the conduit at an angle of 17 degrees. The bulk of the water flows through the screen, which is sized to exclude fish. Fish then are guided across the screen face into the bypass conduit.

Because of the tight spacing in the screen, debris such as leaves and pine needles collect and clog the screen. For debris removal, the screen includes a pivot that is powered hydraulically to rotate the screen to a position that presents the back side of the screen to the flow in order to backflush debris impinged on the front of the screen. This cannot be done for an extended period of time because this condition exposes fish to the open framing behind the screen. It also does not give fish anywhere to go. So, they will be forced into the back side of the screen. The arrangement for the new facility provided has a full flow bypass that can be used as an emergency bypass if debris cannot be cleared from the screen in a reasonable time period. In order to allow fish to access the full flow bypass the screen is rotated to a horizontal position, allowing fish to swim above or below the structure and pass into the bypass. See Figure 9-10 below for the arrangement of the screen in its typical operating position, guiding fish into the primary bypass. Note that flow in the images below is from right to left. Figure 9-9 shows the screen rotated approximately 34 degrees into the backflush position. Finally, Figure 9-11 shows the screen rotated horizontally into the emergency or full flow bypass position.

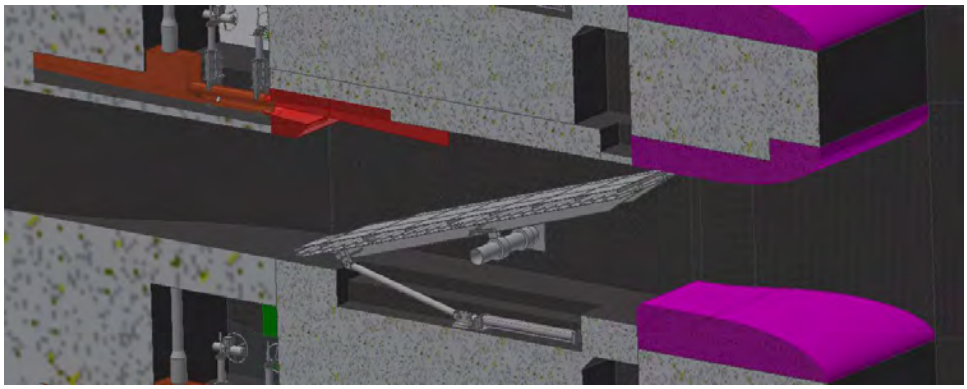

Figure 9-9: MIS Screen in Backflush Position

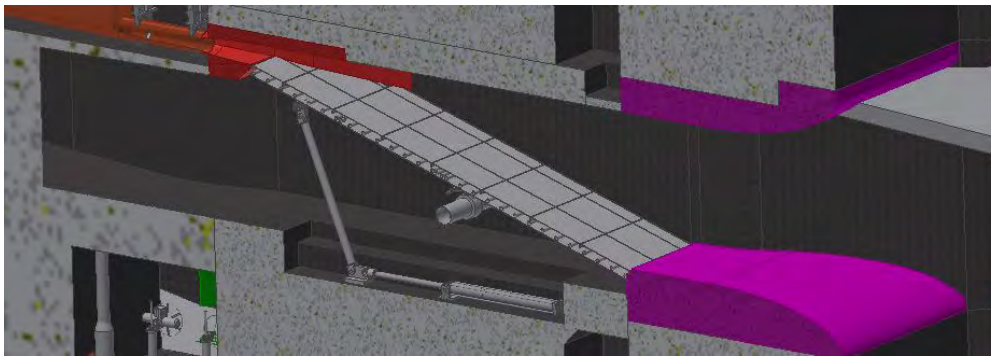

Figure 9-10: MIS Screen in Primary Bypass Position

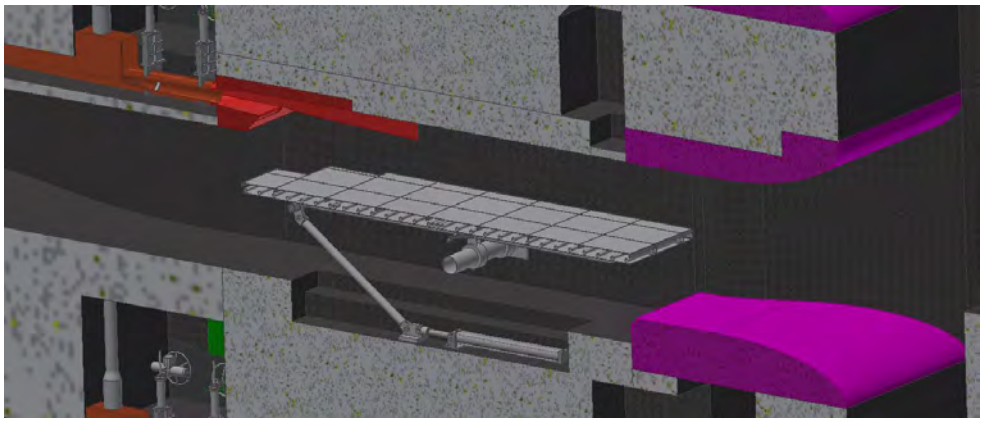

Figure 9-11: MIS Screen in Full Flow Bypass Position

The screen frame is supported by a trunnion mount located towards its midpoint. This pipe supports the hydrodynamic load on the screen and rests in sockets cast into the chamber walls. This allows the screen to rotate. The operation of the screen is provided by a hydraulic cylinder connected to an operation rod which connects to the gate. This system rests in a recess in the chamber floor in order to keep it out of the flow. This hydraulic system will be configured to use an environmentally acceptable lubricant (EAL) as the working fluid. Although, it may be worthwhile to investigate the use of water hydraulics as a working fluid if there is concern from a fire protection perspective. The machinery recess in the chamber floor will be outfitted with a bubbler array to keep it clear of sediment or other debris accumulations. The opening will be protected with a

brush seal to keep larger debris out of the moving components. The rotating or sliding components of the trunnions or operating linkages will be provided with self-lubricating fiber reinforced polymer bushings similar to either Orkot or Karon V. If there is a concern with the use or durability of this type of bearing, more standard greased bronze bushings may be provided instead. If greased bushings are used, a lubrication network will be provided to route lubrication lines to a common point within the adjacent gallery. Greasing can either be done manually or automatically with a Farval system. Grease should be an EAL.

While the backflush system will likely provide the most complete debris removal, it is a lengthy process that exposes fish to the hazardous edges of the screen frame. Depending on the time of year, the debris load in the river may be significant, causing the screen to plug multiple times per day. In order to provide an additional cleaning method that can be more readily deployed, an air burst system will be provided internal to the screen. This system will consist of 4 air burst manifolds supported between the bar screen surface and the porosity plates. The air burst bars consist of 3” pipe with 1/8” holes drilled every two inches along the length of the pipe. Each manifold will connect to an air port on the chamber wall. The port and the manifold will be connected by a stainless steel braided hose in order to allow the screen to rotate. The ports will be located on the back side of the screen where the hoses can be protected from debris and have most of the slack taken up when the screen is in the deployed position. The different ports will allow each manifold to be triggered sequentially from the most upstream to the most downstream. See Figure 9-12 below for the air manifold arrangement in the screen.

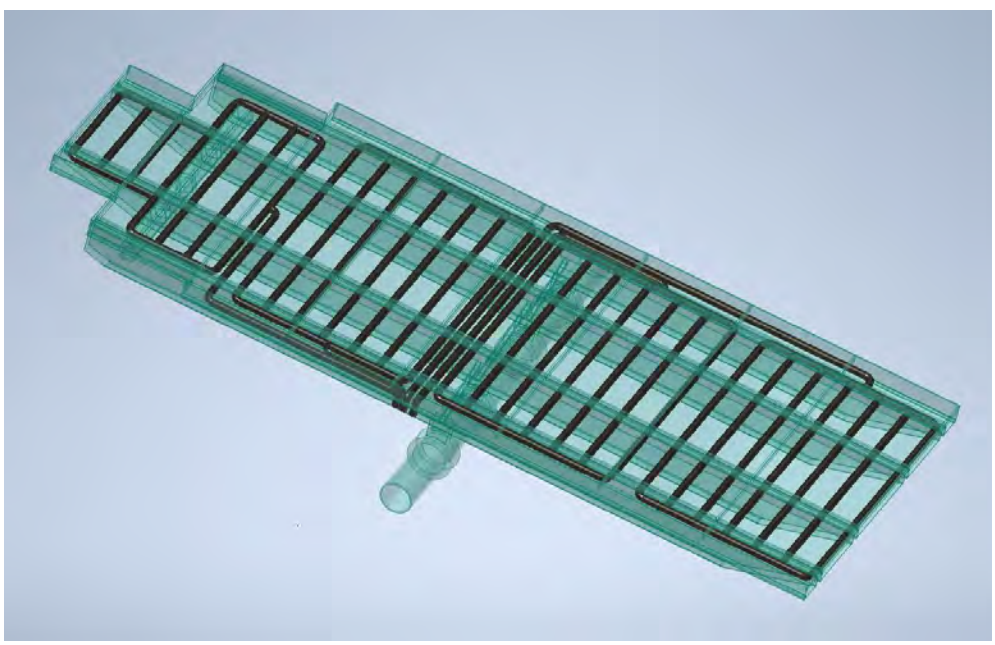

Figure 9-12: MIS Screen Air Burst Manifold Layout

There are some risks inherent with the MIS type screen system. A small screen opening is required for fish safety and a relatively small screen size will result in higher than usual screen velocities. For most times this has been determined to be an acceptable risk. However, during periods of high debris loading the maintenance required to keep the screen clean may be excessive. The system design calls for multiple levels of protection to keep the screen operating. A monitoring system will let the operator know if a high head differential is building up across the screen. As a high differential builds up, an air

burst system is provided to allow rapid incidental cleaning. This will be most effective for smaller particulates like needles. If the air burst cleaner cannot effectively clean the screen, the screen rotation and backflush can be actuated. This will provide the highest degree of cleaning but will be a more time-consuming process where any fish present will be at risk. Finally, if the screen rotation system fails or is not effective, the collector can be removed from service and un-watered while an adjacent collector is operated. This will allow personnel to enter the chamber and manually clean or repair the screen.

The Bureau of Reclamation (BOR) has a technical publication that describes the Eicher and MIS Screens, its design features, testing, and lessons learned from the installation at various projects, including:

- Green Island (Niagara Mohawk Power)
- Elwah River Hydroelectric project
- Puntledge Hydroelectric (BC Hydro)
- T.W. Sullivan Plant (Portland General Electric)

The BOR document notes that the screens are designed so that the fish will pass quickly over them, however some physical contact will likely occur. This can result in impingement, injuries such as descaling, and mortality. Therefore, conduit sweeping velocity needs to be 6 fps or less, which has shown to provide low mortality rates. Overall survival rates from empirical information exceeded 95%. Note that only Green Island utilized the MIS screens whereas the other three utilized the Eicher screens.

There are a couple different design alternatives that should be considered for future design efforts. First is complete removal of the screen. The system presented here is configured such that the full flow bypass smooth and fish friendly with the intent that even if the screens were eliminated, fish would have a safe and effective means to pass the dam. With this alternative, the screen and all appurtenant components along with the entire primary bypass conduit system would be eliminated from the design. There only passage would be through the full flow bypass conduits which could be further optimized for fish safety.

A second alternative is to locate the screen pivot at the upstream edge of the screen. This would allow the screen to lay flat, flush to the concrete floor. With this configuration you could readily remove the screen from the flow path if needed, but could deploy it for normal situations. A significant benefit of this arrangement is that the full flow bypass could be utilized without the risk of fish impacting the screen structure. This would be of use if the debris buildup on the screen were more frequent than expected or heavier than expected. During these times the screen would be rotated flat and essentially completely removed from the flow path. One noted drawback of this arrangement is that the screen could not be rotated to a backflushing position, so an alternate means of backflush would need to be provided. An air burst system similar to what is described above could be effective. An air burst system could also be provided in the screen recess to backflush the screen when it is laid flat. Even with the air backflush the cleaning would not be as effective as with the rotated backflush.

9.4.2. **Operations**

The Fish passage system is designed with a trash rack. Allowance for a manual guided raking system may be considered to protect the trash racks from inadvertent impacts via clam shell debris removal but clear bar spacing will permit most small to medium debris to enter collection ports. The screens would collect debris in the form of pine needles and leaves. Debris is removed from the screens by rotating the screens into the

backflush position which allows debris to be flushed downstream. Backflushing is needed at some sites once a week and others at regular 6-hour intervals, and others have had to backflush every hour during heavy loading events in the fall. The periodicity for backflushing is dependent on the location and the time of year. Backflushing can be done manually, at regular intervals based on a timer, or when triggered by a differential pressure setting. Design consideration will be needed to determine the duration for each backflushing cycle, which historically is a few minutes to up to 10 minutes. Typically, the duration of operation with no fish exclusion is from 1.0 percent to 0.1 percent of the time. Since the backflush would hamper fish passage, the design may need to consider reducing the duration, particularly if the debris is anticipated to be heavy. Lessons from projects indicate that the backflushing has been very effective in cleaning the screens.

9.4.3. **Maintenance**

The screens need to be inspected annually. Lessons from projects indicate that some pressure washing is needed to dislodge trapped debris and potentially any insects. Screens may need minor repairs on occasion. One plant estimated that the amount of outage time to pressure wash and maintain the screens was limited to four hours per year. Access and lockout/tagout to enter the MIS area will be required. The hydraulic system will also need to be maintained periodically.

9.5. Primary Bypass

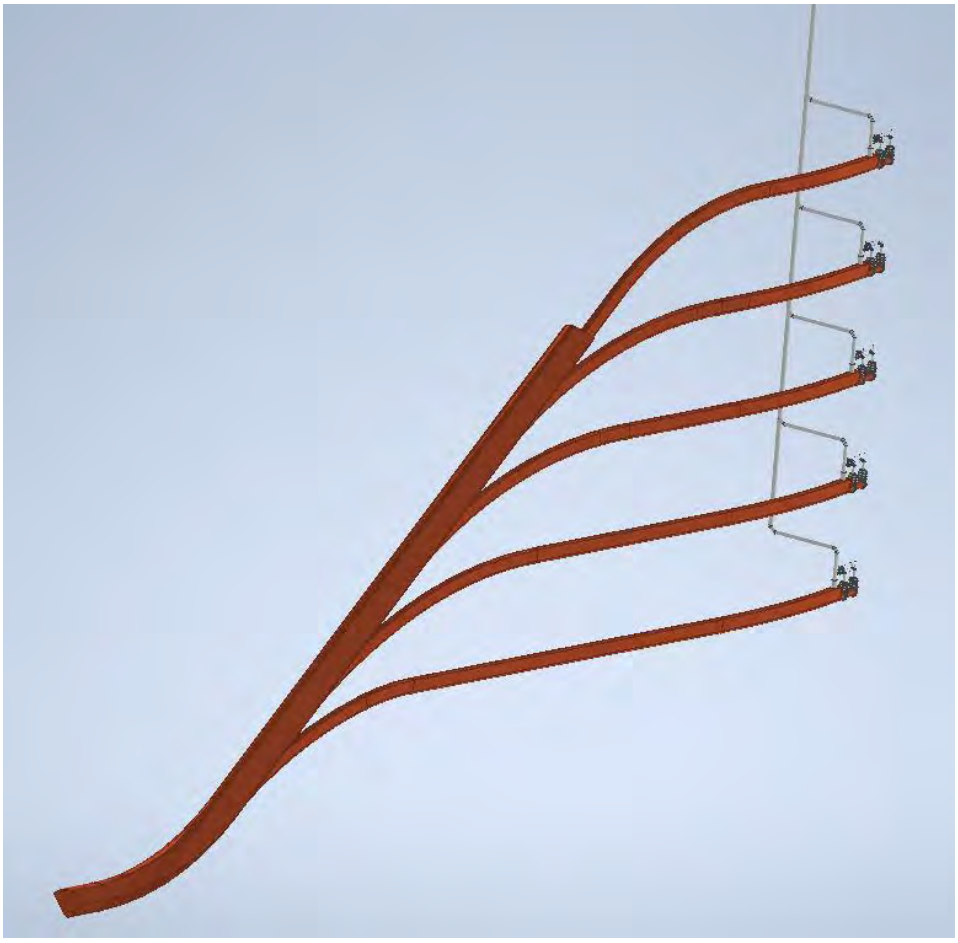

Figure 9-13: Primary Bypass Isometric

Criteria	• Anadromous Salmonid Passage Facility Design (NOAA 2011)
Size	5 – 16”x36” stainless steel flumes, 1 junction flume.
Qty	5
Requirements	• Embedded in mass concrete • Flexible couplings at connections to concrete structure • Some consideration for thermal expansion • Venting required

9.5.1. **Design**

The primary bypass system is provided to convey fish from the exit of each collector horn into the deceleration tunnel and from there to the river beyond.

The MIS screens guide fish into a formed transition which connects to each lateral of the primary bypass system. At each connection point, the bypass exists as a 16” diameter pipe. The pipe stretches for about 6 feet where it converts to a flume with a 16” diameter bottom but extends upwards as a rectangular flume. Most of the flume is embedded in the structural concrete with some exposure for the valves and access. Special design consideration should be made during design to verify that the flume transitions and alignment are maintained during the concrete placement. Within the 6 feet of pipe, there are two isolation valves that allow flow isolation from horns that are not in operation. The first valve, closest to the collector is an emergency closure valve and the next valve is an operating valve. The valves are 16” full port bonneted knife gate valves. The valves are only for on/off operation and will not be used to throttle flow. Both the operating valve and the emergency valve arer motor operated with a handwheel backup.

A lateral flume is present at each collector horn outlet. All five laterals merge into a common flume aligned at a 45 degree angle. The common flume transitions at the bottom of the structure to a nearly flat angle where it connects to the deceleration tunnel. The common flume is a V shaped flume with a 16” diameter base and extends approximately 4.6 feet tall with a width of 8.5 feet. See Figure 9-14 below for the different flume sections. The flume on the left is the lateral flume and the right is the common flume.

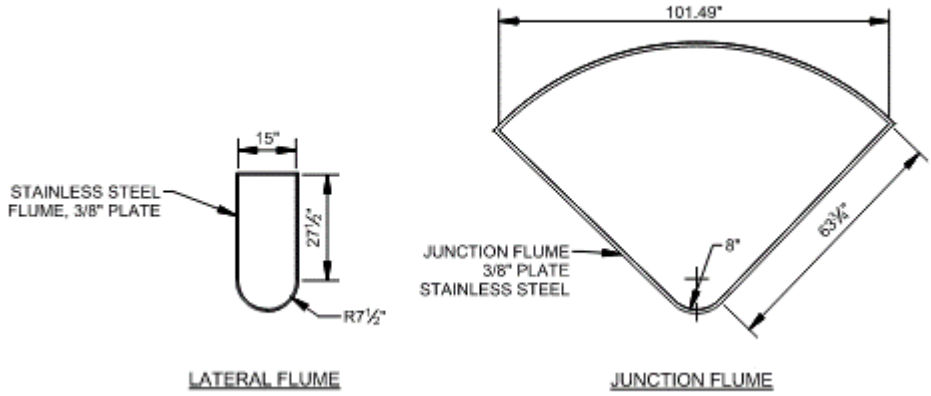

Figure 9-14: Primary Bypass Flume Sections

The total length of lateral flume required is 673.66 feet. The total length junction flume is 161.51 feet. The relative flume lengths are provided in the table below.

Table 9-1. Primary Bypass Flume Lengths.

Collector 5 flume	Length - 90.94’
Collector 4 flume	Length – 112.35
Collector 3 flume	Length – 134.53
Collector 2 flume	Length – 161.69
Collector 1 flume	Length – 174.15
Common Flume	Length – 162.51

The primary bypass system will need to be fabricated from stainless steel instead of being fabricated of carbon steel with an epoxy liner. There will likely be significant debris entrained in the flow which will likely damage an epoxy liner. A damaged liner on a carbon steel flume would lead to corrosion which would result in a hazard to fish. Since the majority of the flume will be embedded in concrete it will be extremely difficult to access for monitoring or recoating. Also, due to the irregular shape of the flume, it will be more challenging to apply a coating than it would be for a round section, making the coating application expensive. For these reasons a lined carbon steel flume should not be considered. Instead, the flume should be fabricated from stainless steel. This material does not require a liner and will not corrode if it is damaged by debris.

In order to meet the hydraulic requirements, the connection between the lateral flumes and the common flume needs to occur gradually over a large radius bend. This will make the fabrication of the flumes difficult. See below for a typical connection between the

lateral and common flumes. This shows a lateral flume merging with a larger 45 degree flume through a bend radius of 80 feet.

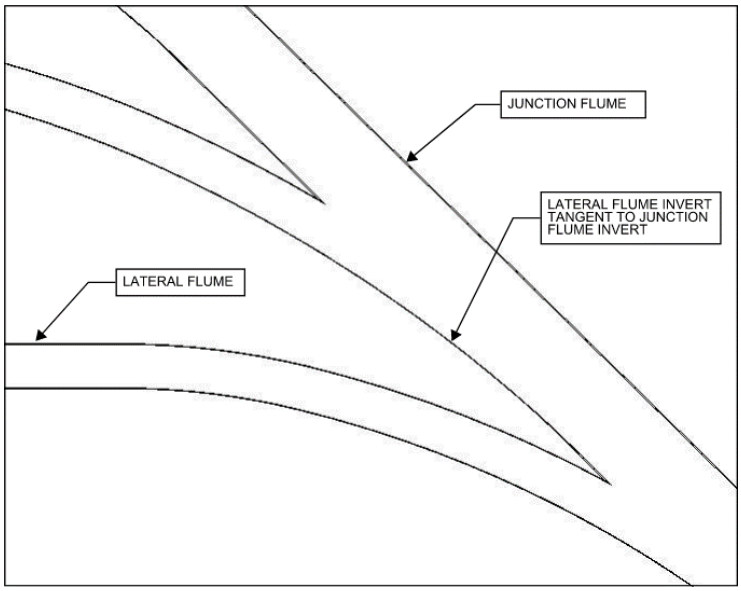

Figure 9-15: Lateral Flume Connection to Common Flume

Each lateral needs to be vented. From the beginning of each lateral flume portion, an 8” steel pipe vent extends upwards approximately 10 feet where it laterals over to a common vent stack. It merges to a 10” vent stack that connects all the vents and terminates up near the top of the elevator tower. The vent opening will be protected from birds and insects with a screened cap. The total length of vent pipe is about 166.4 feet.

Access will need to be provided to sections of the primary bypass; however, this access has not been shown at this stage. This access will serve two primary purposes, inspection, and debris removal. Inspection is required in order to verify that the flumes remain free of debris or surface defects that may be injurious to fish. Inspection will be done by personnel where entry into the flume is possible, otherwise it will be by pipe inspection camera. Access for debris removal will be limited because the lateral flumes are too small for people to enter, and the junction flume is at too steep an angle. However, debris removal may be performed by flushing a pipe pig or ice block through the flumes. This access will take the form of an opening in the top of the flume. Key points are at the beginning of the lateral flumes where maintenance equipment can be inserted, just before the lateral flumes make the vertical turn to meet the junction flume, at the top of the junction flume and at the bottom of the junction flume where it flattens out. Access will be provided via access shafts in the concrete fill.

9.5.2. **Operations**

There should be little operational requirements for these pipelines. Each pipeline contains bypass valves noted above for unwatering and isolation. Otherwise, the pipes should be passive.

9.5.3. **Maintenance**

There should be little maintenance requirements for these pipelines. Each pipeline contains bypass valves noted above for unwatering and isolation. See the maintenance requirements for the valves below. The flumes may become clogged from time to time. This will require clearing. Due to the irregular shape of the flumes, it may not be possible

to use typical pipe cleaning approaches. Often a block of ice is effective as a battering ram to break up any clogs.

9.6. Primary Bypass Gates

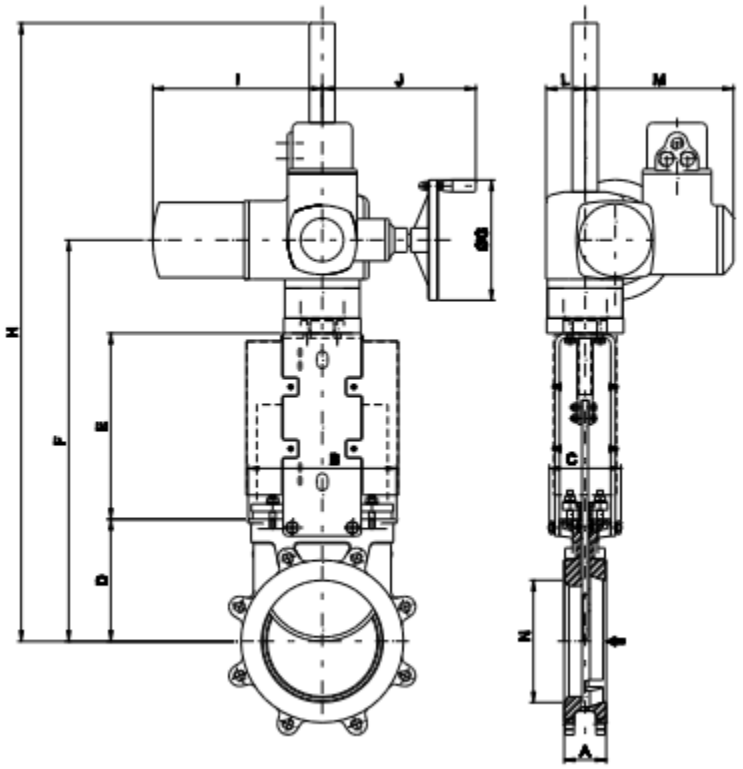

Figure 9-16

Criteria	AWWA C520-19
Size	16”
Qty	10
Material	Stainless Steel with EPDM seats and o-rings
Features	• Electric Motor Operated (AWWA C542) with Manual Emergency Operation • Flanged Connection • Designed for 150 psi maximum working pressure

9.6.1. Design

These knife gates are commercial off the shelf (COTS) purchases and utilize AWWA C520-19 for standard design criteria. Two knife gates are needed for the bypass piping at each horn and will be in series. This will provide two means to secure flow. BOR technical publication indicates that slide or knife gates are typically used in the bypass system.

Gate valves will need lockable operation for lock-out/tag-out purposes. When selecting the location for installation, the designer will need to consider the location for valve maintenance and removal or replacement.

9.6.2. Operations

These gates will be in the normally open position. The gates will have control from a remote location as well as manual control at the valve to secure in an emergency. Operation of the gates would be to secure flow to provide planned or unplanned maintenance. Having two gates for each primary bypass provides a redundant means to secure flow.

9.6.3. Maintenance

Maintenance on the gate valves will be as recommended by the gate manufacturer. Typical motor maintenance may be required along with changing the oil in the operator gearbox and stem. Stem packing may also need to be change periodically.

9.7. Full Flow Bypass Gates

9.7.1. Design

These gate systems are designed similar to regulating outlet gate systems at high head dam locations per EM 1110-2-1602 and the Regulating Outlet Standardization Report generated by NWP. Proposed gate geometry closely matches regulating gates at Blue River Dam, Oregon. Each collector conduit will include an emergency closure gate and a service gate with the service gate placed within 6’ of conduit ogee. Hydraulic Steel Structure requirements are likely to be applied to the gates but will be coordinated with structural design.

Gate operator will be a hydraulic cylinder designed to operate at 2000 psi. Cylinder will be double acting with seal provisions to ensure compatibility with EAL as a working fluid.

Bonnet packing gland will be provided to ensure packing can be adjusted under pressure on the dry side of the bonnet.

Multiple Hydraulic Power Units will be provided to ensure redundant systems, two port simultaneous operation, and designed to employ an environmentally acceptable lubricant as a working fluid. Cylinder to HPU connections will be made using stainless steel tubing. Various pressure gauges and test ports will be provided with trouble condition feedback provided via network connection.

Stainless steel cladding will be required upstream and downstream of each gate to guard against cavitation damage at seal transitions. Cladding will be continued downstream from the service gate per hydraulic design parameters.

Each conduit gate system will be vented using 36” diameter, ¼” wall spiral welded pipe. Pipe will have an epoxy coating system, inside and outside surfaces. Pipe is routed to the tower to be vented outside the tower above the spillway design flood elevation. A louvered and screened transition will be provided.

9.7.2. Operations

Each gate will be rated to operate under 125 feet of head. The service gate profile and seal clearances will be carefully coordinated to allow safest reasonable juvenile salmonid passage. Gate rating curves will be coordinated to ensure gates are normally operated at the largest, hydraulically reasonable opening, for various forebay elevations

expected during passage season. Method for position indication will be determined as design progresses but is unlikely to deviate from regulating outlet gate design.

9.7.3. **Maintenance**

Installation will allow normal dry access to upper bonnet and hydraulic cylinder. Collection port will require dewatering or inspection during low forebay elevations for HSS inspections if required. Given the large change in forebay elevations it is expected there will be opportunities to perform inspections in the dry but lower ports may require bulkhead deployment to perform these inspections.

Figures below are clipped from Blue River Dam as-built drawings.

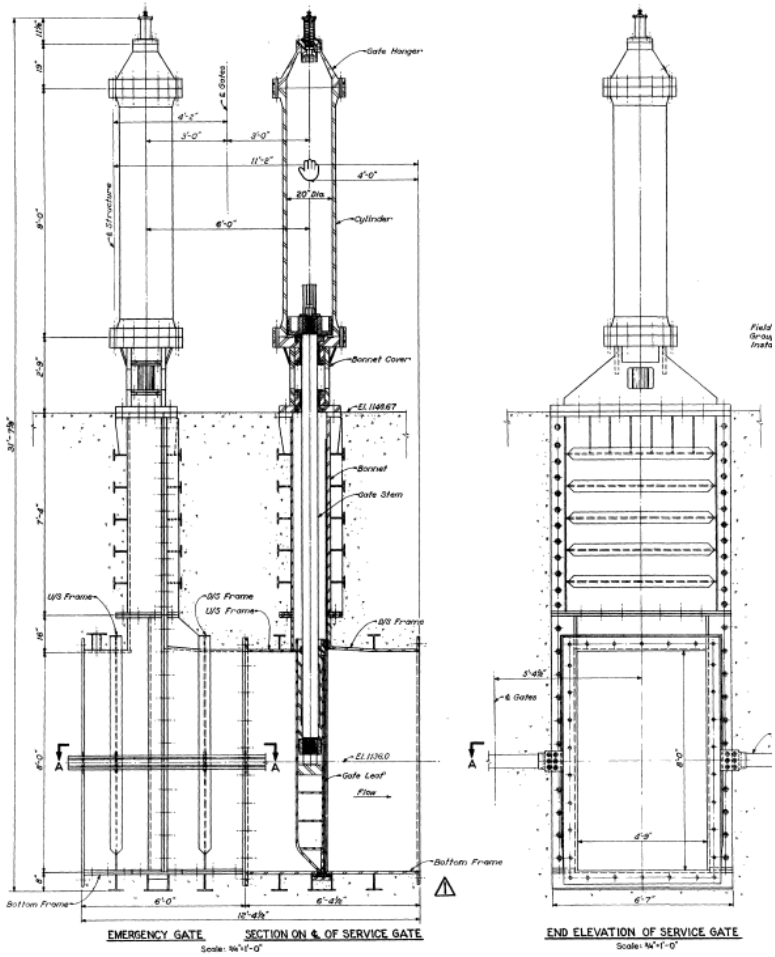

Figure 9-17: Blue River Dam - Regulating Outlet Gate

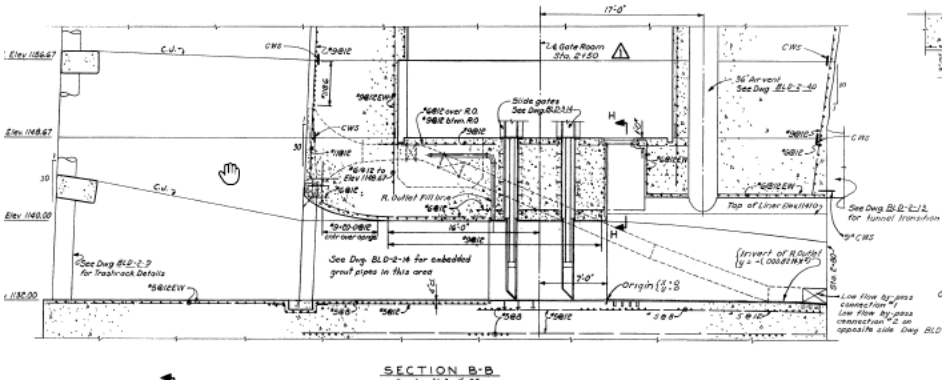

Figure 9-18: Blue River Dam - Regulating Outlet Gates, section view

9.8. Watertight Access Doors and Hatches

9.8.1. Design

Watertight doors and equipment installation hatches are required at various locations within the tower to guard against inundation during high water surface elevations. Doors will be provided by a manufacturer with expertise with fabrication and installation of doors designed as quick acting per UFC 4-179-01. Each door or hatch will be designed for the 100-year flood condition.

9.8.2. Operations

Watertight doors and equipment installation hatches are operated per manufacturer recommendations

9.8.3. Maintenance

Watertight doors and hatches will be subject to inspection per hydraulic steel structure criteria where applicable. Future requirements to be coordinated with structural design.

9.9. Heating Ventilation and Air Conditioning

9.9.1. Design

This facility will require access by operators and maintenance personnel and so will need to provide conditioned spaces for safety and comfort. The HVAC system for the facility is fairly straight forward and will conform to industry standards. In general, the ventilation for the fish passage facility will conform to ASHRAE and ACGIH. Fresh air will be provided to the building occupants at a rate of 0.06 cfm per square foot in accordance with ASHRAE; overall exhaust rate will be 0.5 cfm per square foot in accordance with ASHRAE. For air movement purposes, the structure's area is approximately 15,000 sqft. Constant volume exhaust systems will be provided for areas as required. Electric unit heaters will be used for freeze protection within unoccupied spaces. Where space allows, electric radiant heaters will be used for comfort spot heating. Dehumidification and smoke exhaust systems will be provided as criteria warrants. Colling for the collector portion is not expected due to the large volume of concrete and sub-surface nature of the structure. The elevator tower will likely require cooling, however. For the tower, a unitary, roof mounted, heat pump is anticipated. See additional detail for the HVAC system for this facility in the 95% plans and DDR.

A full HVAC system analysis was not performed as part of this effort, instead the original 95% design was scaled to support the cost estimate for the new facility. Occupied area

was selected as the best metric for scaling. The total occupied area for the new facility was estimated and that compared to the estimated area in the 95% design. From that comparison a scaling factor was determined that could be applied to the cost estimate for the original facility. The 95% facility occupied spaces include 15 floors within the elevator tower and 6 floors, 1 each adjacent to each collector as well vertical access stairways connecting each floor. The total area for the 95% facility was about 13,000 ft^2. The new facility will have these same spaces with an additional 5 spaces set up or maintenance of the full flow bypass gates and 5 spaces for maintenance of the primary bypass valves. The additional space adds up to approximately 1740 ft^2. This works out to an increase of about 13%, so the 95% estimate for HVAC can be increased by that amount.

9.9.2. Operations

The HVAC system will operate with power and controls similar to other industrial facilities.

9.9.3. Maintenance

HVAC system maintenance is expected to be similar to other industrial facilities. Elements requiring maintenance are primarily the fans used to drive air flow and the compressors used to drive the cooling system.

9.10. Facility Plumbing and Piping

9.10.1. Design

This facility will require several utilities to support the occupied spaces and maintenance activities. The following utilities are required; raw water, compressed air, domestic water and domestic sewer. Raw water will be provided for general facility cleaning and washdown needs. Domestic water and sewer will be provided to support bathrooms within the facility and the elevator tower. Compressed air will be provided for tool usage as well as screen cleaning air burst systems. The air demand for small tools is relatively minor, however the demand for the air burst systems is significant. For this system a redundant pair of rotary screw air compressors will be provided at the bottom elevation of the facility. Air will be piped to dedicated air receivers located in the gallery adjacent to each collector. Receivers will be sized to store the air required for a single air burst cycle. Air from the receivers will be piped via a valve manifold to the various pipe connection for the air burst system. Air at the compressor location will likely be moist due to leaks and seepage throughout the facility, but the HVAC system will provide freeze protection. As such an air dryer is not required to prevent freeze blockages but will be needed for proper operation of hand tools. A dedicated pipe network for tool usage can be protected by a refrigerated air dryer. The air burst system does not require drying, but will need drains on each receiver. Proper air supply and cooling for the compressors should also be considered. The compressor should be located where there is a free supply of air, or the proper fresh air will need to be supplied. An air compressor delivering 100 psi air requires about 8 times the supplied air in fresh air to account for the compression ratio. Heat is also a concern. An air compressor rejects nearly its entire power rating as heat into the compressor room. So, means to cool and ventilate this space should be provided.

With the exception of the compressed air system, these systems are straight forward and will conform to industry standards. Similar to the HVAC system, a full analysis of these utilities was not performed, opting instead to scale the costs presented in the 95% facility. Occupied area was selected as the best metric for scaling. The total occupied

area for the new facility was estimated and that compared to the estimated area in the 95% design. From that comparison a scaling factor was determined that could be applied to the cost estimate for the original facility. The 95% facility occupied spaces include 15 floors within the elevator tower and 6 floors, 1 each adjacent to each collector as well vertical access stairways connecting each floor. The total area for the 95% facility was about 13,000 ft^2. The new facility will have these same spaces with an additional 5 spaces set up or maintenance of the full flow bypass gates and 5 spaces for maintenance of the primary bypass valves. The additional space adds up to approximately 1740 ft^2. This works out to an increase of about 13%, so the 95% estimate for the utilities can be increased by that amount.

9.10.2. Operations

These utilities will operate similarly to other industrial facilities. The raw water will be pumped from the forebay. Compressed air will be routed for tool usage throughout the facility. Domestic water will come from a new branch from the existing well. This will need to be routed to the new facility. There is no available space or proper material for a new drain field, so the new facility sanitary sewer will route to a holding tank which will be pumped periodically.

9.10.3. Maintenance

Utility maintenance is expected to be similar to other industrial facilities. Periodic septic tank pumping will be required for the domestic sewer system. Maintenance on the compressed air system will primarily only be required on the air compressors and supporting air dryers.

9.11. Collector Structure Drainage and Unwatering

Criteria	EM-2902, EM-4008, UFC 3-420-01, IPC
Size	1/2” – 6” (mostly 4” and 6”)
Qty	unknown
Material	Steel (ASTM A 53), Cast Iron (ASTM A 74)

9.11.1. Design

In order to perform maintenance or repair work on the screens or appurtenant system, it will be necessary to unwater any given collector horn. In order to do this the flow through the horn must be stopped and then the water removed, this is unwatering. The flow is originally stopped by closing the primary and full flow bypass valves. Then the bulkhead is lowered into place. See the discussion above. With the bulkhead in place, the water can be drained from the chamber through the full flow bypass by opening the bypass gate. Because the bypass conduits are linked, the bypass gate cannot remain open. So, a drainage system will be required to allow seal leakage to exit the chamber. The drainage system will be controlled by local gate valves and lead to a network of embedded drain pipes that lead to the facility sump located below the collector horn one. From there the drainage will be pumped to a location to be determined at the time of design. These systems are not fully determined at this point, as a result the similar systems illustrated in the 95% design are shown below.

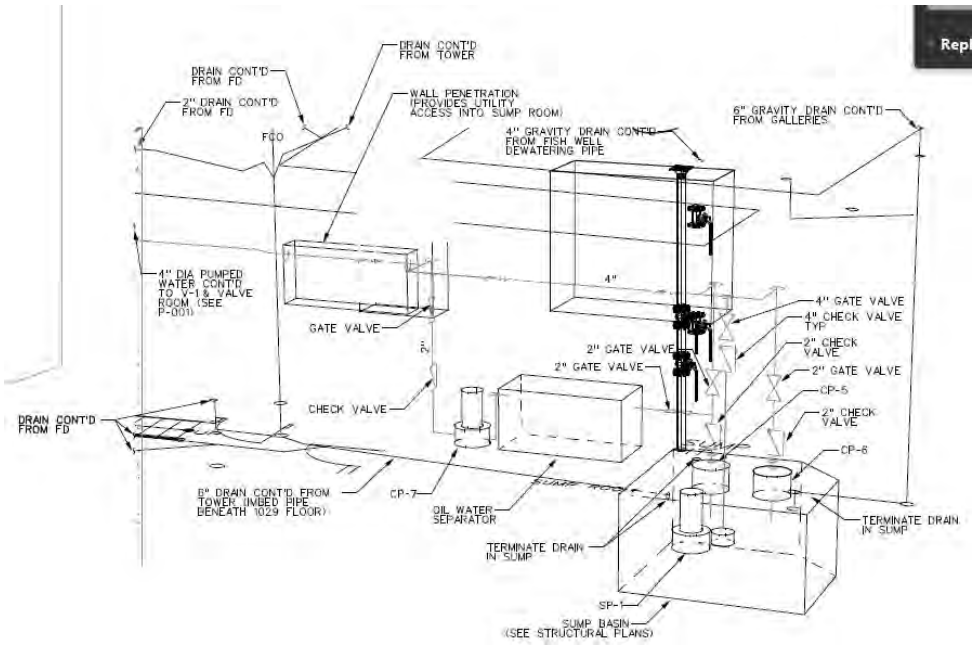

Figure 9-19: 95% Design Drain Schematic

WATER PUMP SCHEDULE

MARK	TYPE	SYSTEM	SERVICE	MONITORING STATION FLOW		SECOND OPERATING POINT		MIN. % EFF.	MOTOR			MODEL No. OR EQUAL	REMARKS
				GPM	TOTAL HEAD PRESSURE (FEET)	GPM	TOTAL HEAD PRESSURE (FEET)		BHP	VOLTS/ PHASE/ HERTZ	RPM		
CP-1	VERTICAL INLINE	MONITORING STATION FLOW	PRIMARY SERVICE	300	159	500	99	75	18.4	460/3/60	1780		SINGLE SPEED
CP-2	VERTICAL INLINE	MONITORING STATION FLOW	STANDBY SERVICE	300	159	500	99	75	18.4	460/3/60	1780		SINGLE SPEED
CP-3	NOT USED												
CP-4	NOT USED												
CP-5	AIR OPERATED DOUBLE DIAPHRAGM	GALLERY SUMP TO OWS	PRIMARY SERVICE	20	161	24	130	(AIR OPERATED)				WARREN RUPP SA1-A	SEE NOTES (3) (4) AND DETAIL ON PLATE P-501
CP-6	AIR OPERATED DOUBLE DIAPHRAGM	OWS BYPASS	SECONDARY SERVICE	40	48	32	92	(AIR OPERATED)				WARREN RUPP SA1-A	SEE NOTES (3) (4) AND DETAIL ON PLATE P-501
CP-7	VERTICAL INLINE	OWS WATER DRAIN	PRIMARY SERVICE	25	30	60	25	85	1	460/3/60	1780		
SP-1	VERTICAL	EMERGENCY DEWATERING	PRIMARY SERVICE	200	40			75	4	460/3/60	1750	GOULD HSU	3" INLET/3" OUTLET WITH RECESSED IMPELLER

NOTES:
(1) PUMPS SHALL BE NON-OVERLOADING AT 115% DESIGN FLOW.
(2) PROVIDE SUCTION DIFFUSERS WITH STRAINERS WHERE INDICATED.
(3) 1" SUCTION & DISCHARGE, 10 SCFM AIR MIN: 1/2 " AIR INLET CONN 3/4 " AIR OUT CONN. PUMP SHALL BE CONTROLLED BY PNEUMATIC FLOAT SWITCH
(4) CP-5 & CP-6 SHALL BE CONTROLLED BY PNEUMATIC FLOAT SWITCHES.
(5) CP-5 & CP-6 SHALL BE DISABLED UPON SIGNAL FROM THE FIRE ALARM CONTROL PANEL THROUGH A NORMALLY CLOSED ELECTRONICALLY OPERATED PNEUMATIC VALVE

Figure 9-20: 95% Design Pump Schedule

9.11.2. Operations

Drainage in the fish horns will normally be secured by gate valves that would be opened during dewatering operations, such as when the dewatering stop logs have been installed. Individual horns may be dewatered by operational bulkheads, so individual gate valves will be needed for each horn to prevent cross connection with a horn that is in service.

9.11.3. Maintenance

Maintenance on the pumps and gate valves will be as recommended by the gate manufacturer.

9.12. Tower Elevator

9.12.1. Design

An elevator will be provided to provide convenient access to the different floors withing the fish facility. The elevator will travel approximately 173 feet between the sump level at elevation 1055 at the bottom of the facility to the crossover bridge at elevation 1228 at the top of the facility. The elevator will be a traction style elevator with an overhead machine room.

The car will be a minimum of 8’ by 6 foot and able to carry a gurney for emergency egress. The car will have an industrial finish with check plate walls and floor. The car capacity will be 2500 pounds and rated for personnel and freight. The elevator will not be ADA accessible.

The elevator controls will include call stations with Phase 1 recall along with Phase 2 fire safety. The elevator will be in compliance with the IBC, NFPA, and ASME A17.1 Safety Code for Elevators

9.12.2. Operations

Elevator Operations will be pretty typical, with call stations at each floor. It will have emergency operation secured with a key and smoke monitoring to prevent the doors from opening at a smoke laden landing.

9.12.3. Operations

Elevator maintenance will be performed by contracted certified elevator maintenance contractor. Maintenance will include periodic inspections and adjustments to the controls along with incidental repair of drive machinery.

9.13. Fire Protection

A central fire protection system is not expected to be required for this facility. Occupancy is quite low and the presence of combustible material is limited. There will be machinery rooms with moderate volumes of hydraulic oil that could pose a fire risk. For these locations a local fire alarm system will be provided along with fire extinguishers. The fire alarms will be connect to a network that provides both local indication and indication to the control room. Codes should be evaluated during design to determine the specific needs for a fire protection system. It may also be worthwhile to consider alternative hydraulic fluids that are less combustible such as water hydraulics.

10. Electrical Requirements

10.1. Electrical Design Criteria

The following publications will be used for design of the electrical portions of the project:

NFPA 101, Life Safety Code

NFPA 72, National Fire Alarm Code

NFPA 70, National Electrical Code

IES Lighting Handbook

ANSI C2, National Electrical Safety Code

10.2. Functional Design Requirements

Electrical features are essentially the same as the 2009 design. The upgrades to the incoming medium voltage overhead lines, as described in the 95% DDR issued in 2009, have been completed. The new overhead lines begin at the 0 (zero) mile mark and continue to the dam. These new overhead lines have the capacity to handle the existing load and to accommodate the new load associated with the tower and the new buildings.

10.3. Technical Design Criteria

U. S. Army Corps of Engineers Technical Instructions, TI 800-01, Design Criteria

U. S. Army Corps of Engineers Technical Instructions, TI 810-90, Elevator Systems

TM 5-811-1, Electrical Power Supply and Distribution

TM 5-811-3, Electrical Design Lightning and Static Electricity Protection

UFC 3-310-03A, Unified Facilities Criteria, Seismic Design for Buildings

UFC 3-400-01, Unified Facilities Criteria, Energy Conservation

UFC 3-520-01, Unified Facilities Criteria, Interior Electrical Systems

EM 1110-2-2610 Lock and Dam Gate Operating and Control Systems

EM 1110-2-2704 Cathodic Protection Systems for Civil Works Structures

ER 1110-2-1150 Engineering and Design for Civil Works Projects

ER 1110-345-700 Design Analysis, Drawings and Specifications

ETL 1110-2-553 Control Stations and Control Systems for Navigation Locks and Dams

11. Telecommunications Requirements

11.1. Telecommunication Design Criteria

The following publications will be used for design:

- UFC 3-580-01 Telecommunications Interior Infrastructure Planning and Design, 01 June 2016, with Change 1, 01 June 2016
- ANSI/IEEE C2-2017 National Electrical Safety Code
- BICSI Telecommunications Distribution Methods Manual (TDMM)
- BICSI Customer-Owned Outside Plant Design Manual (CO-OSP)
- TIA-568-C.0 Generic Telecommunications Cabling for Customer Premises
- TIA-568-C.1 Commercial Building Telecommunications Cabling Standard
- TIA-568-C.2 Balanced Twisted-Pair Telecommunications Cabling and Components Standards
- TIA-568-C.3 Optical Fiber Cabling Components Standard
- TIA-569-D Commercial Building Standard for Telecommunications Pathways and Spaces
- TIA-570-C Residential Telecommunications Infrastructure Standard
- TIA-606-C Administration Standard for the Telecommunications Infrastructure
- TIA-607-C Generic Telecommunications Bonding and Grounding (Earthing) for Customer Premises

11.2. Functional Design Requirements

Telecommunication Features are essentially the same as the 2009 design with adding a telecommunication vault for OSP telecommunication system.

11.3. Technical Design Criteria

Telecommunication for the areas within the tower and the Monitoring Station will be added to the existing site Telecommunication system at Howard Hanson Dam. The existing Telecommunication system will be upgraded and relocated to the new Administration Building. PDT still need a confirmation from the telecommunication utility to confirm the existing OSP telecommunication infrastructure that can support this project.

12. Hazardous and Toxic Materials

To facilitate the construction of the Additional Water Storage Project Fish Passage Facility at HAHD, several construction support areas have been proposed. These areas would be used by a construction contractor for purposes of construction material laydown, equipment storage and maintenance, support trailer staging, and contractor

employee parking. Most of the proposed support sites are on lands owned by USACE and would not require a lease to use those sites for construction support. The proposed construction support site at Milepost 6.5 is located on land owned by Tacoma Public Utilities. The proposed support areas located on the south side of the Green River immediately downstream of HAHD are also located on lands owned by Tacoma Public Utilities. Use of these support areas would require a lease or agreement with Tacoma Public Utilities.

An Environmental Condition of Property (ECP) Report and Phase I Environmental Site Assessment (Phase I ESA) has been prepared to review the environmental history and condition of the proposed construction support areas. As of January 2022, the ECP report is a draft that is undergoing review. The ECP and Phase I ESA document recognized environmental conditions at the sites and can be used to support decision making with respect to leasing and use of the proposed sites. The ECP report findings indicate a documented spill of diesel fuel and subsequent remediation of petroleum-contaminated soil at the lower Milepost 3.5 site (which is in USACE ownership). Remedial action is complete and no further cleanup or monitoring is required for this site. With respect to the remainder of the proposed construction support sites, there is no record of releases of hazardous substances or petroleum or disposal of contamination at these locations. Because remediation is complete or because there is no record of environmental release, the proposed construction support sites can be used as intended and without further consideration with respect to historical environmental contamination

13. Construction Procedures and Water Control Plan

13.1. Construction Sequence

The following sequence represents the expected flow for how construction will be completed:

1. Mobilize equipment and prepare staging areas/job trailers
    a. Setup tower cranes
    b. Setup batch plant
2. Dewater the existing excavation and resume excavation
    a. Main excavation
        i. Reuse existing stoplogs in intake slots as cofferdam.
        ii. Install additional dewatering wells.
        iii. Dewater upstream pit
    b. Downstream (*)
        i. Install super sack cofferdam for stilling basin
        ii. Install additional dewatering wells.
        iii. Dewater downstream excavation.
3. Complete downstream and upstream excavations
    a. Main excavation
        i. Install stabilization measure around the existing tunnel prior to excavating the extension to the excavation
        ii. Continue excavation down to final grade in 10’ intervals, installing grouting and rock bolts as required
        iii. Complete excavation and prep for concrete placement
    b. Downstream excavation
        i. Install stabilization measure as required
        ii. Complete stilling basin excavation in preparation for completing the tunneling
        iii. Start tunneling from downstream to upstream (*)

iv. Continue tunneling installing rock anchors and grouting as required, install steel sets in less stable areas
v. Complete tunneling connecting to main excavation
vi. Construct temporary plug for tunnel to protect uncontrolled spill

4. Construction of the facility in the main excavation
    a. Complete concrete structure working up floor by floor
    b. Completing structural and general backfill as concrete construction progresses
    c. Install interior structural components and MEP equipment
5. Once the facility has reach the 1181' elevation start work on site improvements around the facility
    a. Install guide and retaining walls
    b. Backfill working platform to grade
    c. Install concrete working surface
6. Complete Access tower and connect facility utilities
    a. Install concrete structure working up floor by floor
    b. Install interior structural components and MEP equipment
    c. Construct access bridge
    d. Connect permanent facility utilities
7. Complete tunnel construction
    a. Perimeter lining
    b. Interior Y wall
    c. Finalize tunnel with class A concrete finish
8. Construct stilling basin
    a. Foundation slab
    b. Sidewalls
    c. Construct access bridge
    d. Excavate scour pool with temporary supersacks cofferdams for in channel work
9. Construct outfall pipe for the primary bypass
    a. Excavate foundation and install piers
    b. Install outlet pipe
    c. Excavate plunge pool with temporary supersacks cofferdams for in channel work
10. Complete any remaining site work
11. Commission and operation testing of the facility
12. Demobilize from the site

13.2. Care and Diversion of Water

Construction of the proposed facility is estimate at 3-4 years to complete. This will likely mean construction activities through all seasons of the year and that construction will need to be prepared for the varying reservoir elevations. During previous construction efforts a permanent cofferdam was constructed to facilitate construction. This cofferdam will continue to be utilized to isolate construction from the reservoir. The cofferdam was built to keep the excavation isolated from the summer conservation pool (water surface elevation of 1167'). The conservation pool elevation also equates to a 0.13 annual chance of exceedance (ACE) or a 7-8 year storm event. Due to the likelihood of the reservoir exceeding the cofferdam top elevation it was assumed that during flood season on the green river (Oct 15 to February 15) that construction behind the cofferdam would be halted. It maybe allowable for the contractor to continue working within the cofferdam

during flood season but that would be at the contractor's risk for having to demobilize in the circumstance that an overtopping event of the cofferdam is predicted.

The downstream stilling basin, preformed scour pool, and plunge pool at the fish outfall will also require more temporary cofferdams. These features of work are estimated to be completed in a single work season and assume 2 temporary supersack cofferdam for construction.

13.3. Dam/Reservoir Operations

There are no major changes to dam operations expected during construction of the facility. The operations staff at the facility will need to accommodate construction activities and the additional traffic that will result from construction. The proposed staging areas have been sited in coordination with operations staff and to minimize impacts to the operations of the HAHD.

Additionally, minimal impacts to reservoir operations are expected, with the cofferdam already in place any construction in the reservoir will be completed working around typical reservoir operations. During the previous construction activities, the temporary cofferdam outside of the in place cofferdam was left in place and may require lowering the reservoir below typical to facilitate removal of the temporary structure.

14. Operation and Maintenance

14.1. Operation

The fish passage facility will be actively managed to pass fish based on project inflows, required outlfows and forebay elevations. The facility will be operated up to an inflow of 4,000 cfs and be closed above 4,000 cfs inflow due to concerns of high debris loads. There may be some flexibility in this operation. At anytime if there is a high debris load the facility may be temporarily closed to prevent excessive screen clogging.

The facility is designed to pass between 230 cfs and 1,200 cfs. When one collector horn is in use outflows will be between 230 cfs and 600 cfs. When two collector horns are in use outflows will be split evenly between the two and the total outflow will be between 600 cfs and 1,200 cfs. If the project is required to release more than this flow should be released from a combination of the FPF, 19-foot tunnel, and/or, 48" bypass.

There are 5 fish collection ports. Depending on the elevation of the forebay these ports will be opened and closed as needed. It is intended that either one port will be operated, or two adjacent ports will be operated together. No more than two (2) ports should pass flow, though there may be flexibility when changing between ports. For example, if port 1 and 2 are passing flow and the forebay rises sufficiently to start operating port 3, it may be desirable to close port 1 and open port 3 simultaneously in an attempt to keep downstream flows constant. The one or two ports closest to the water surface should be operated based on the following elevation restrictions. Running deeper ports is not recommended due to the deeper sounding depths required for fish and the more extreme hydraulic conditions.

Port 1 can be open between forebay elevations 1079.1 feet NGVD29 and 1123.1 feet NGVD29.

Port 2 can be open between forebay elevations 1101.1 feet NGVD29 and 1145.1 feet NGVD29.

Port 3 can be open between forebay elevations 1123.1 feet NGVD29 and 1167.1 feet NGVD29.

Port 4 can be open between forebay elevations 1145.1 feet NGVD29 and 1177.0 feet NGVD29.

Port 5 can be open between forebay elevations 1167.1 feet NGVD29 and 1177.0 feet NGVD29.

Note that these elevations assume a minimum 7 foot submergence is required on each port. These elevations will be updated during design if the required submergence is found to be different.

When opening a port the primary bypass gate should be open first, followed by the full flow bypass. This will ensure a sweeping flow past the screens is maintained and prevent fish impingement on the screens. When closing a port the opposite procedure should be used, first close the full flow bypass, then close the primary bypass.

The primary bypass gate should either be in a full open or a full close position. Partial gate openings may be harmful to fish. Flow will vary between 25 to 66 cfs depending on the forebay elevation.

The full flow bypass gate is intended to be throttled during normal operations, that is, open to partial gate settings. Flow will vary based on the current forebay elevation and gate opening to produce a desired outflow. Rating curves will be provided for each gate which can be used to determine desired gate settings.

14.2. O&M Responsibilities

The HAHD operations staff will be responsible for the operations and maintenance of the proposed facility. The following table of O&M tasks was developed in coordination with the operations staff to estimate the required O&M for the proposed facility.

Table 2: O&M Tasks

Task #	O&M Task	Description	Frequency	Resources	Effort/Duration	Hourly Rates	Annual Cost
	Facility Operations						
1	Operations of Collectors/Gates	10 months a year as guide curve moves	weekly	1	40 hours	$139.54	$241,869.33
2	Cleaning of screen debris boom	8 months a year (SEPT-April)	weekly	2	10 hours	$139.54	$96,747.73
3	Clearing of Debris on trash rack	As needed	annually	2	40 hours	$139.54	$11,163.20
4	Cleaning/Operation of MIS	10 months	weekly	4	10 hours	$139.54	$241,869.33
5	FPF Stilling basin	Clean debris/patch	annually	4	120 hours	$139.54	$66,979.20
6	Utilities	$20K	annually				$20,000.00
7	Elevator Certification	1 elevator, car, and hoist	annually	1	24 hrs	$139.54	$3,348.96
8	Compressed Air reciever Certification	2 compressors, 6 recievers	annually	1	24 hrs	$139.54	$3,348.96

9	Hydraulic system receiver Certification		annually	1	24 hrs	$139.54	$3,348.96
10	Diesel Generator Testing		Monthly	1	4 hrs	$139.54	$6,697.92
	Maintenance of Systems						
11	General maintenance	12 months	weekly	2	10 hours	$139.54	$145,121.60
12	Typical HVAC System Maintenance		annually	2	40 hrs	$139.54	$11,163.20
13	Typical Hydraulic System Maintenance	10 gates, 5 screens, 5 hpus, 5 recievers	annually	2	80 hrs	$139.54	$22,326.40
14	Typical Compressed Air Maintenance	2 compressors, 6 recievers	annually	2	40 hrs	$139.54	$11,163.20
15	Drain/Unwater Pump Maintenance	2 vertical turbine pumps, water lube	annually	2	24 hrs	$139.54	$6,697.92
16	Crane maintenance	Gearbox oil change, lubricate rope, inspect	annually	2	40 hrs	$139.54	$11,163.20
17	Diesel Generator Annual Service		annually	2	8 hrs	$139.54	$2,232.64
18	Isolation of the full facility	Full Facility Bulkhead Placement	annually	4	40 hrs	$139.54	$22,326.40
	Inspections						
21	Dam safety AI	1/2 additional cost for inspection	annually	5	4 hrs	$139.54	$2,790.80
22	Dam safety PI	1/2 additional cost for inspection	5 years	10	4 hrs	$139.54	$1,116.32
23	Dam safety PA	1/2 additional cost for inspection	10 years	10	8 hrs	$139.54	$1,116.32
24	HSS	$20K	annually				$20,000.00
25	Safety/Security	$30K	annually				$30,000.00
26	Inspection of Primary Bypass Flumes	Visual inspection via camera, no entry	2 years	2	40 hours	$131.49	$5,259.60

27	Inspection of Full Flow Bypass	Visual inspection via camera, no entry	2 years	2	40 hours	$131.49	$5,259.60
28	Bridge Inspection		5 years	2	24 hours	$139.54	$1,339.58
29	Collector Intake/Screen Inspection		annually	2	40 hours	$139.54	$11,163.20
	Misc						
31	Biologist - Coordinate fish studies, ensure BiOp compliance, monitor injuries. 6 months	$2K	weekly	1	10 hours	$116.39	$60,522.80
32	Instrumentation/IT	$60K	annually				$60,000.00
33	WATER MANAGEMENT	due to additional management require for FPF	weekly	1	20 hours	$139.54	$145,121.60

14.3. Repair, Replacement and Rehabilitation (RR&R) Requirements

The HAHD operations staff will be responsible for the RR&R requirements at proposed facility. The following table of RR&R tasks was developed in coordination with the operations staff to estimate the required for the proposed facility.

Table 3: RR&R Tasks

Task #	Repair/Rehab/ Replacement Task	Description	Frequency	Cost Per Occurrence	Rough cost	Notes
1	Downstream Road/Channel/Culverts	Wash Out and repair channel wall	20 years	$952,270.20	20%	Repair embankment and restore wearing surface
2	Bulk Heads (unwatering)	Replace	100 yr	$9,509,256.00		Reaches project life
3	Trash Racks	Replace	50 yr	$3,444,470.00		
4	Screens	Replace	25 yr	$8,472,121.00		New Screen structure, new cylinders, new HPUs
5	Screens	Major Rehab	15 yr	$1,270,818.15	15%	New Screen surface, new bushings, rehab cylinders, new hoses, new valves, rehab HPUs
6	Elevator	Replace	50 yr	$1,178,863.00		New car, hoist, controls, guides, counterweight.

7	Elevator	Major Rehab	25 yr	$117,886.30	10%	New ropes, drive, and controls
8	Stilling Basin Access Bridge	Major Rehab	50 yr	$148,673.50	25%	
9	Pedestrian Bridge	Major Rehab	50 yr	$63,687.00	25%	
10	Outfall Pipe/Piers	Major Rehab	25 yr	$428,799.00	50%	
11	Outfall Pipe/Piers	Replace	50 yr	$857,598.00		
12	Full flow bypass gate	Major Rehab	25 yr	$2,242,455.00	50%	Hydraulic Power unit replace, gate repair, seal repair/replace, cylinder rebuild/replace
13	HVAC system	Major Rehab	25 yr	$112,377.95	5%	Replace blower, heat strips, duct cleaning, thermostats, control dampers etc.
14	Misc. Instrumentation	Replace	15 yr	$330,900.00		Pressure Transducers, string potentiameters, gauges, etc. Likely no rehab potential.
15	Facility Sump pumps	Major rehab	15 yr	$34,217.90	10%	New bearings, lineshaft, impellers
16	Watertight door	Major rehab	15 yr	$20,932.38	2%	Seal replacement, mechanical repairs as needed
17	Gantry Crane	Major Rehab	25 yr	$500,000.00	10%	New motors, controls, bearings, couplings, sheaves, rehab gearboxes.
18	Facility Sump pumps	Replace	50 yr	$342,179.00	100%	Complete Replacement
19	Gantry Crane	Replace wire rope	15 yr	$250,000.00	5%	Replace wire ropes
20	Bulkheads (unwatering) - Rehab	Major Rehab	25 years	$1,901,851.20	20%	Repaint Gates, replace seals, minor structural repair
21	Primary bypass valves	Replace/Rehab	25 yr	$589,273.00		Purchase spare valve, swap out valve send out to rebuild Valve/compare to full replace
22	Full Flow bypass gate	Replace Gate	100 yr	$4,484,910.00		Reaches project life
23	Log Boom, lower screens	Major Rehab	50 yr	$117,065.10	15%	Replace submerged screens, replace damaged floats, repair connection points
24	Compressed air system	Major Rehab	25 yr	$20,937.60	10%	Replace valves, filters, drive, controls,

25	Compressed air system	Replace	50 yr	$209,376.00		Complete Replacement, compressor, air receivers, valves, controls
26	Full flow bypass conduit	Re-Line	50 yr	$1,498,873.00	10%	In place mortar lining over the entire surface.
27	Plumbing	Replace	10 yr	$2,539,108.00		Replace fixtures and valves
28	Septic	Replace	25 yr	$42,039.00		Replace lift pumps and receiver tank
29	Trash Rake	Replace	25 yr	$100,000.00		New clamshell type trash rake
30	Bulkheads (operational) - Rehab	Major Rehab	25 years	$331,233.60	20%	
31	Bulkheads (operational) - Replace	Replace	100 yr	$1,656,168.00		Reaches project life

15. Risk Assessment

A semi-quantitative risk assessment on the feasibility design for the FPF was completed, including a Potential Failure Modes Analysis and a risk assessment of potential failure modes judges to be o the highest risk to the project, see appendix B-8 for the risk assessment report. Two primary risk driving failure modes were identified as increasing the risk associated with HAHD.

The identified failure modes will be evaluated further during design of the facility and risk mitigation strategies will be implement as necessary to either demonstrate the potential failure mode is not valid or to bring the risk within tolerable levels.

16. Cost Estimates

See Appendix C of the HAHD AWSP Section 902 Post Authorization Change Validation Study- Fish Passage Draft Integrated Validation Report and Supplemental Environmental Impact Statement for the Cost Estimate.

17. Schedule for Design and Construction

The expected schedule for design is 36 months in duration. Design is expected to start midyear of 2023 and continue through midyear 2026. The Acquisition phase is expected to take 1 year from midyear 2026 to midyear 2027. Construction is anticipated to start midyear of 2027 and require 3 years to complete the work midyear 2030. This construction duration assumes no significant construction occurs during flood season (Oct 15th to Feb 15th) due to the likelihood of inundating the construction site.

See Appendix C of the HAHD AWSP Section 902 Post Authorization Change Validation Study- Fish Passage Draft Integrated Validation Report and Supplemental Environmental Impact Statement for the construction schedule developed with the cost estimate.

18. Plates, Figures, and Drawings

See Appendix B-10 of this document for the Drawings.

19. Use of Metric System Measurements

All available data for HAHD is currently in the US customary units therefore the project will continue to utilize those units in order to reduce the likelihood of introducing errors during translations or confusion during the design process. This is consistent with the non-federal sponsor, Tacoma Public Utilities, who does not use the metric system for projects. Additionally, the local contractors are not accustomed to working in metric units and could cause some confusion/translation issues during construction.

Howard A. Hanson Dam
Additional Water Storage Project

Section 902 Post Authorization Change Validation Study – Fish Passage
King County, Washington

APPENDIX B-1

HYDRAULICS

Final Integrated Validation Report and

Supplemental Environmental Impact Statement

US Army Corps of Engineers®
Seattle District

TACOMA POWER
TACOMA WATER
TACOMA RAIL
TACOMA PUBLIC UTILITIES

Appendix B-1 Hydraulics

HOWARD A HANSON DAM ADDITIONAL WATER STORAGE PROJECT FISH PASSAGE PROJECT

Section 902 Post Authorization Change Validation Study - Fish Passage

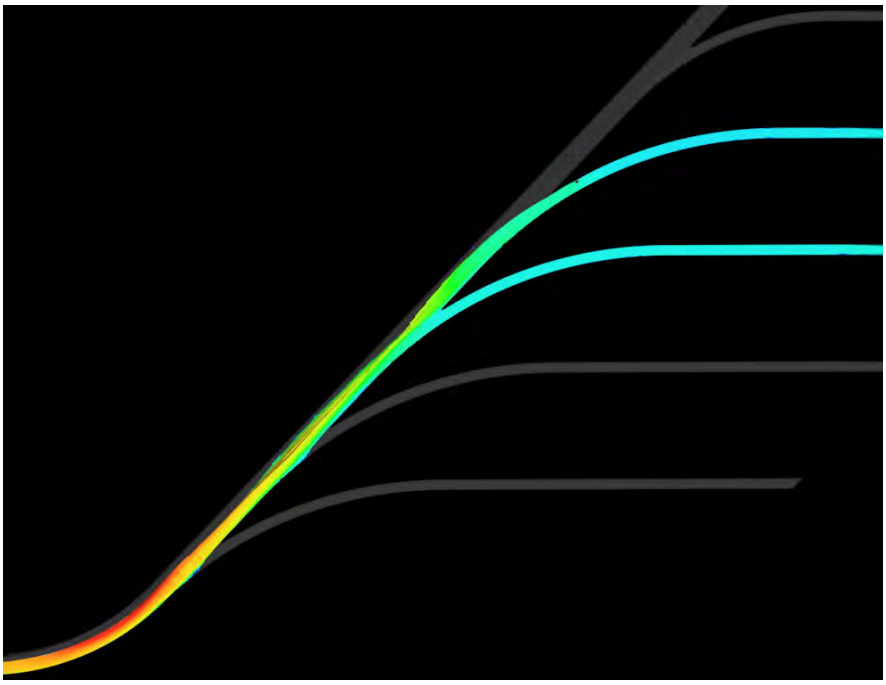

Howard A Hanson Dam, Washington

April 2022

Designers:

Ryan Laughery, P.E. Date: 15Jan2022

David Doll, P.E. Date: 15Jan2022

Reviewers:

Shari Dunlop, P.E. Date: 18Feb2022

Prepared by

US Army Corps of Engineers®
Seattle District

Contents

B-1.1. Hydrology 3
B-1.2. Operation and Sounding Depth 5
B-1.3. Primary Bypass Hydraulics 6
B-1.4. Full Flow Bypass Hydraulics 9
B-1.5. Tunnel Alignment 12
B-1.6. Stilling Basin 13
B-1.7. Downstream Preformed Scour Hole 19

Figures

Figure 1. Howard A. Hanson Dam forebay elevation historical min, max, and average. 3
Figure 2. Hanson Forebay, Inflow, and Outflow 2007-2011 4
Figure 3. Hanson Forebay, Inflow, and Outflow 2011 - 2015 4
Figure 4. Hanson Forebay, Inflow, and Outflow 2015 – 2020 5
Figure 5. Example Sounding depth with 7 feet submergence criteria. 6
Figure 6. Stilling basin rating curve. 14
Figure 7. Tailwater Gage Locations. 16
Figure 8. Stilling Basin Staff Gage 17
Figure 9. Preformed scour hole design guidance. 20

Tables

Table 1. Example percent of time each collector horn is used. 5
Table 2. Primary bypass hydraulic properties 6
Table 3. Primary bypass Upper U-Channel Hydraulic Properties. 7
Table 4. Primary bypass steep slope hydraulic properties. 8
Table 5. Primary bypass deceleration channel hydraulic properties. 8
Table 6. Primary bypass outfall pipe hydraulic properties. 8
Table 7. Howard plunge pool for outfall. 9
Table 8. Full flow bypass gated flow. 10
Table 9. Full flow bypass gate settings. 10
Table 10. Full flow bypass steep slope hydraulic properties. 11
Table 11. Full flow bypass air demand. 11
Table 12. Full flow bypass deceleration tunnel hydraulic properties. 11
Table 13. Tunnel alignment. 13
Table 14. Data used for stilling basin rating curve. 15
Table 15. Hydraulic jump calculations. 18
Table 16. Preformed scour hole calculations 19

B-1.1. Hydrology

Data for hydrology was taken from 2007 to 2020.

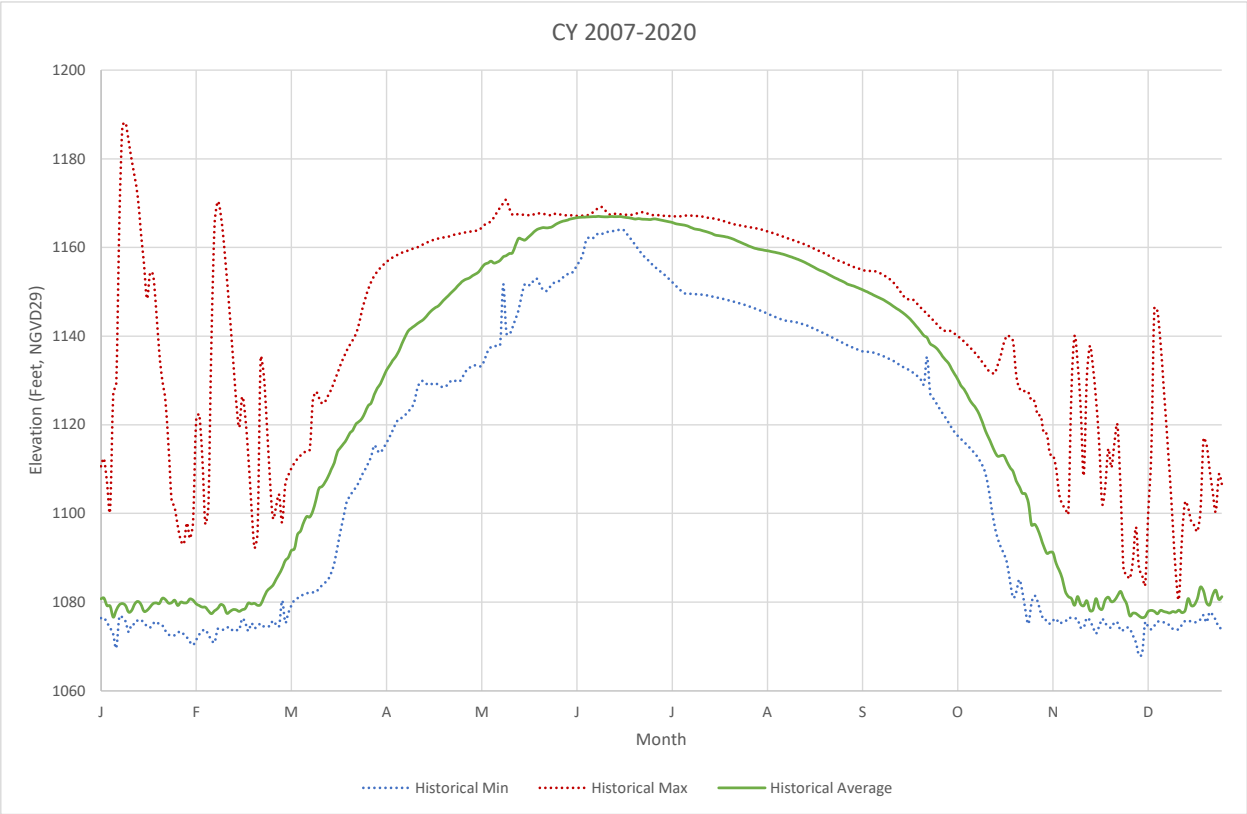

Figure 1. Howard A. Hanson Dam forebay elevation historical min, max, and average.

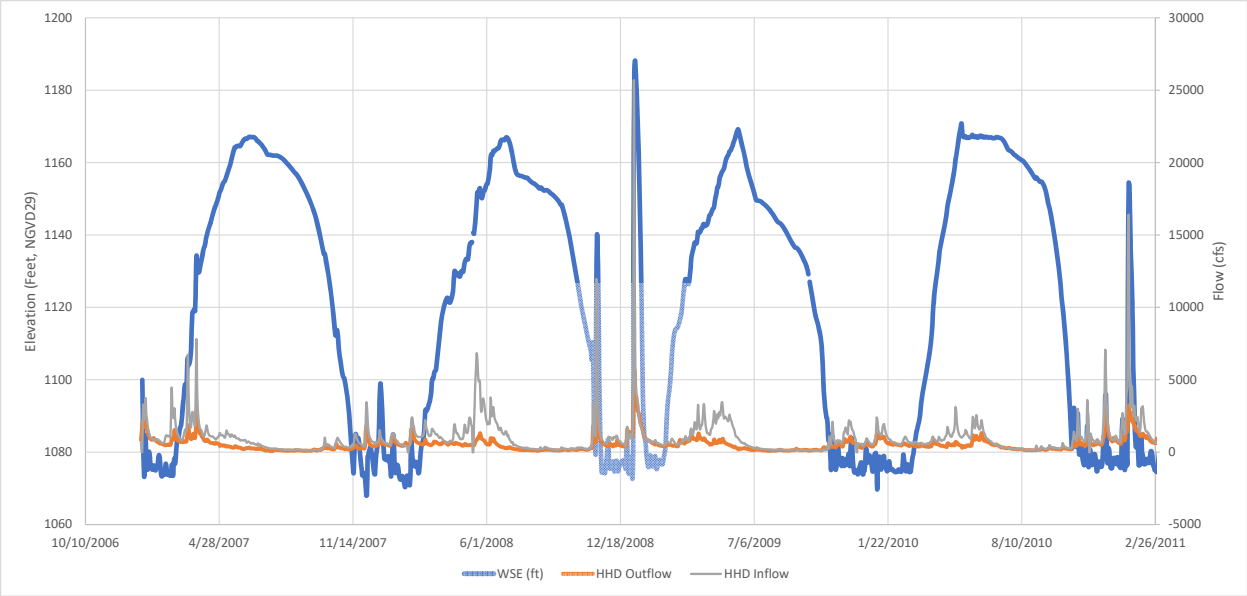

Figure 2. Hanson Forebay, Inflow, and Outflow 2007-2011

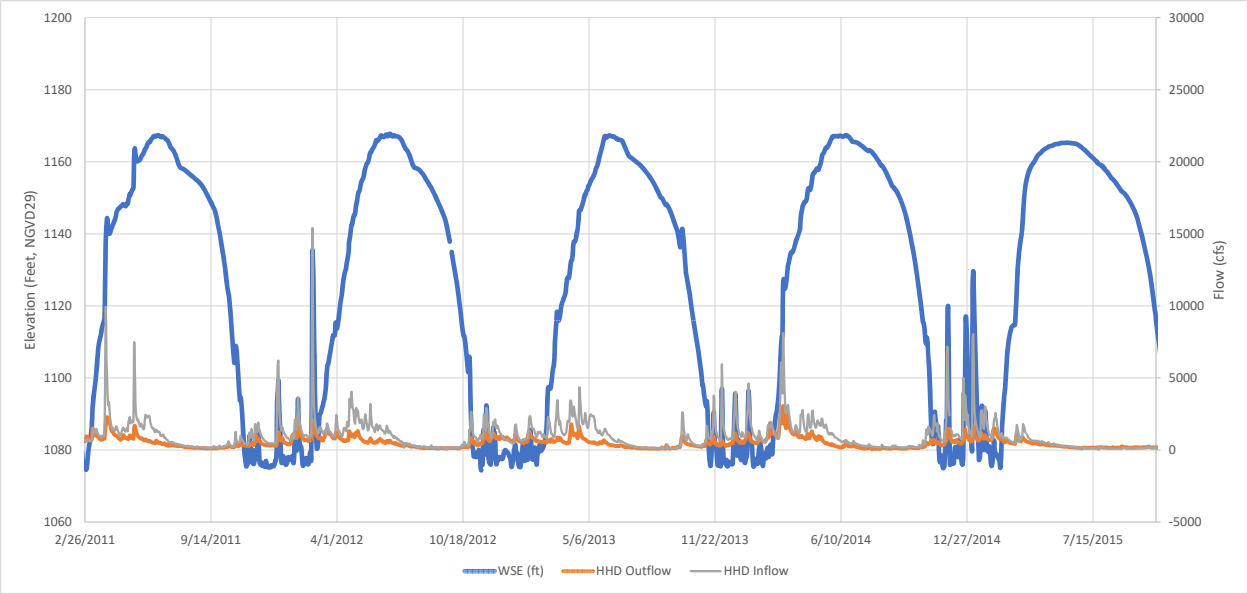

Figure 3. Hanson Forebay, Inflow, and Outflow 2011 - 2015

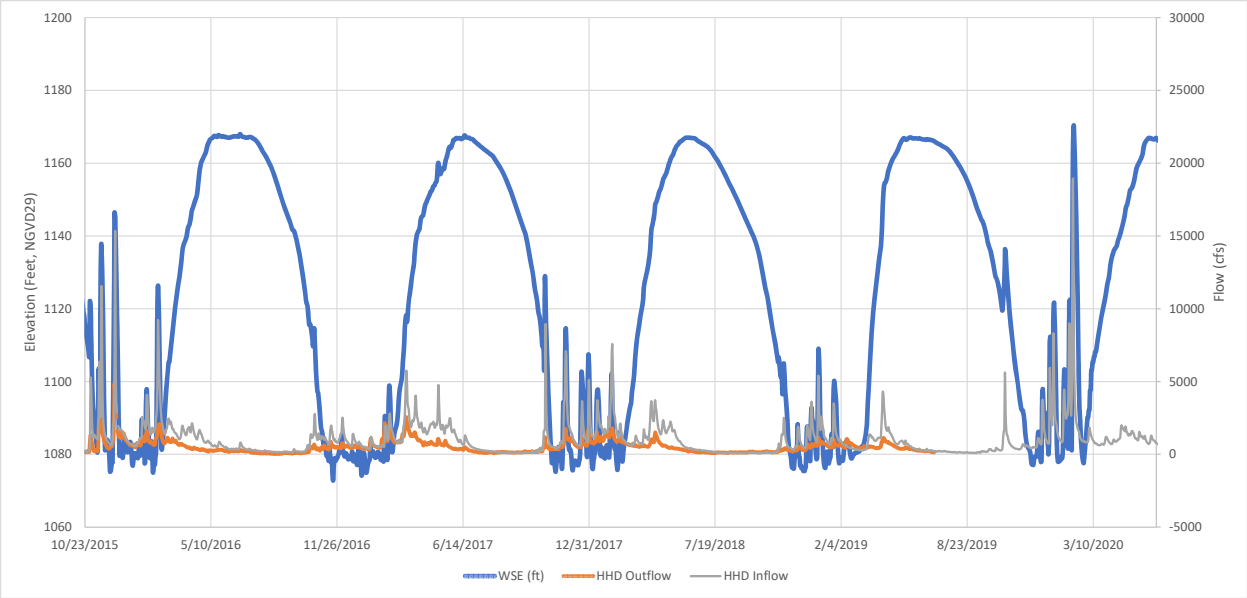

Figure 4. Hanson Forebay, Inflow, and Outflow 2015 – 2020

B-1.2. Operation and Sounding Depth

The hydrologic data from 2007 to 2020 was analyzed to determine the use of each horn and sounding depths.

Table 1. Example percent of time each collector horn is used.

Operational Summary (2007-2020, Feb 15-May 31)

Collector (days/year in operation)	Top Elevation + 7' Submergence (ft)	Days in Operation	Percentage of Total Days
5 (2 days)	1167.1	31	2%
4 (42 days)	1145.1	583	39%
3 (23 days)	1123.1	319	21%
2 (17 days)	1101.2	232	16%
1 (18 days)	1079.1	251	17%
Tunnel (5 days)	1047	71	5%

Notes:

Collectors assumed operational when WSE 7' above the top of the collector horn, but below the elevation the next collector horn is operational at.

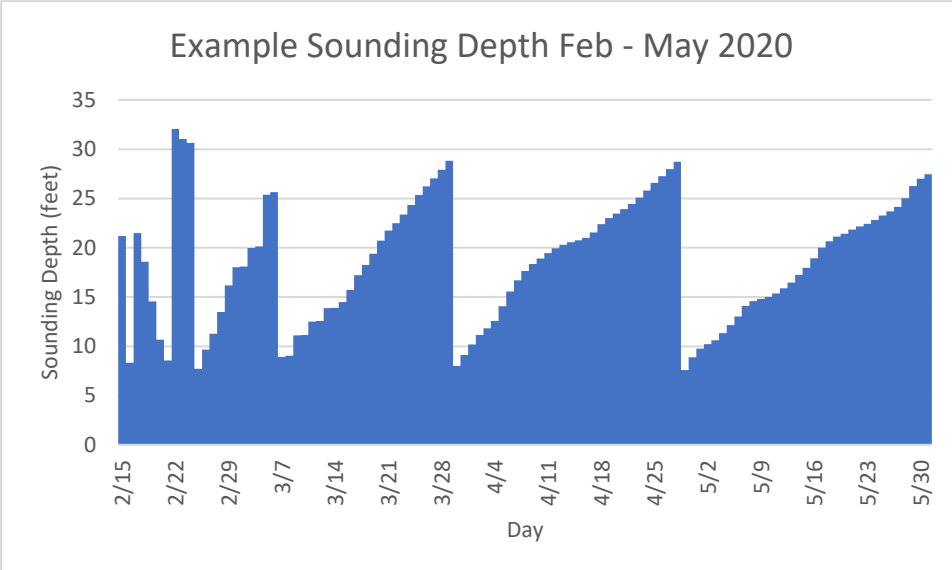

Figure 5. Example Sounding depth with 7 feet submergence criteria.

B-1.3. Primary Bypass Hydraulics

The design incorporates a 16” orifice (15.25” ID) to control the amount of flow entering the primary bypass. The assumed discharge coefficient for this orifice is 0.9 based on preliminary CFD evaluations. Discharge ranges from 25 to 66 cfs depending on head and horn operations. Table 2 below provides hydraulic information for the minimum and maximum head configurations for the various horns.

Table 2. Primary bypass hydraulic properties

Assuming 16" orifice to primay bypass

Area (sqft)	**1.27**

Head Condition	**Min**	**Max #5**	**Max Single**	**Max #4**	**Max 1-3**
H (ft)	7.7	17.6	29.8	39.6	51.7
Q (cfs)	25	38	50	58	66
Max V (fps)	22.2	33.6	43.8	50.5	57.7
Orifice V (fps)	20.0	30.3	39.4	45.4	51.9

Q (cfs)	**Min**	**Max**
Horn 5	25	38
Horn 4		58
Horn 1-3		66

Upon exiting the orifice from each of the horns the primary bypass flow enters a U-shaped flume with a base that matches the 16” orifice geometry and has wall heights of three feet. The flume slopes at 1.0%

from the orifice towards the steep slope. The length of the flume varies for each of the horns with Horn 1 having the longest length of flume at 123 feet. Flow characteristics of the flume and all the following segments were determined using the standard step method with the initial upstream water surface elevations based on the velocity of the vena contracta of the orifice. Table 3 below summarizes the anticipated depth and velocity of flow at the end of Horn 1 flume prior to entering the steep slope section.

Table 3. Primary bypass Upper U-Channel Hydraulic Properties.

Primary Bypass Upper U-Channel

Discharge (cfs)	25		66	
Mannings	Depth (ft)	Vel (fps)	Depth (ft)	Vel (fps)
0.010	1.51	13.8	1.58	34.5
0.011	1.66	12.4	1.73	31.3
0.012	1.85	11.0	1.91	28.2

When flow exits the primary bypass flume it enters the steep slope section of the primary bypass. The vertical alignment of primary bypass was compared to standard spillway ogee radiuses of curvature assuming at point of tangency of a 1:1 slope. Ogee geometry used for comparison assumed full head conditions and negated headloss associated with gradually varied flow of the U-channel.

The ogee equation below was used assuming K of 2, n of 1.85, an H_d of 51 feet for all horns except Horn 5 which used a H_d of 16.9 feet.

$$x^n = KH_d^{n-1}Y$$

where

x = horizontal coordinate positive to the right, feet
n = variable, however usually set equal to 1.85
K = variable dependent upon P/H_d
Y - vertical coordinate positive downward, feet

Using a single simple vertical curve based on the largest radius of curvature prevents negative pressure development and reduces risk of flow separation while improving constructability. Horn 5 vertical radius of curvature is 50 feet while horns 1 thru 4 are 80 feet.

The steep slope segment of the primary bypass is a V-channel with 1:1 sloped side walls with the base of the channel radiused to conform to the 16” diameters of the U-flumes. The channel slope of this segment is 1:1 with an overall maximum elevation change of 124.7 feet from Horn 5. Table 4 below summarizes the anticipated depth and velocity of flow at the end of the steep slope assuming release from Horn 5 with maximum flows associated with lower horns applied to Horn 5. Horn 5 was evaluated to determine minimum flow depths and maximum velocities at the base of the steep slope. Maximum flow of 106 cfs accounts for the combining of flow from two horns in simultaneous operation assuming 66 cfs from the lower horn and 50 cfs from the upper horn. Results do not account for minor losses associated with the combination of flow or the discontinuities at junctions with non-operating horns.

Table 4. Primary bypass steep slope hydraulic properties.

Primary Bypass Steep U/V-Channel

Discharge (cfs)	25		106	
Mannings	Depth (ft)	Vel (fps)	Depth (ft)	Vel (fps)
0.010	0.46	56.7	0.92	78.7
0.011	0.48	53.3	0.98	71.3
0.012	0.49	50.3	1.01	67.9

Once flow exits the primary bypass steep slope it enters the deceleration tunnel. The deceleration channel segment of the primary bypass is a V-channel with 1:1 sidewalls. The slope of this segment is 1.8% with an overall maximum elevation change of 22 feet over the length of the deceleration tunnel of 1219 feet. Table 5 below summarizes the anticipated depth and velocity of flow at the end of the deceleration tunnel for the primary bypass. Evaluations were checked for primary bypass conditions with lower horn releases resulting in deeper/slower flows at the base of the steep slope. Flow conditions reach normal depth for all release elevations and do not influence resulting hydraulic conditions at end of the deceleration tunnel.

Table 5. Primary bypass deceleration channel hydraulic properties.

Primary Bypass Decel V-Channel

Discharge (cfs)	25		106	
Manning's	Depth (ft)	Vel (fps)	Depth (ft)	Vel (fps)
0.011	1.46	11.7	2.51	16.9
0.012	1.51	11.0	2.6	15.7
0.013	1.56	10.3	2.68	14.8

When primary bypass flow exits the deceleration tunnel it enters the outfall pipe which is the last segment of the primary bypass route. This portion of the route is a four-foot diameter pipe that is 275 feet long with an elevation drop of 1.5 feet resulting in a slope of 0.55%. Table 6 below summarizes the anticipated depth and velocity of flow at the end of the outfall pipe for the primary bypass.

Table 6. Primary bypass outfall pipe hydraulic properties.

Primary Bypass Outfall Pipe

Discharge (cfs)	25		106	
Mannings	Depth (ft)	Vel (fps)	Depth (ft)	Vel (fps)
0.010	1.14	8.5	2.46	13.2
0.011	1.2	7.9	2.63	12.2
0.012	1.27	7.4	2.8	11.4

A scour hole is recommended to reduce potential for fish injury from the plunging flow of the primary bypass outfall. Incoming maximum velocity of the jet (21.2 fps) occurs at maximum outfall flow of 106 cfs with a depth of 2.63 ft traveling at 12.2 fps and a 1008 minimum tailwater. Depth of the scour hole was based on design parameters developed for outfalls on the Columbia (B2CC) and Snake River juvenile bypass systems. Relative comparisons to ultimate scour depths were made to ensure equivalent levels of energy dissipation where achieved (Table 7). The invert elevation of the outfall pipe is 1011.35 and the assumed tailwater elevation during maximum bypass flow of 106 cfs is elevation 1008.0 corresponding to a 600 cfs total river flow. The recommended depth of the plunge pool is 17 feet deep resulting in a floor elevation of 991 feet, NGVD29 with downstream exit slope of 3:1.

Table 7. Howard plunge pool for outfall.

Based on Coleman Equation for ultimate scour, 1982 Scour Depth = $1.9H^{0.225}q^{0.54}\sin\theta$		B2CC	JBS	Howard	
Q =	discharge	5000	30	106	cfs
b =	width of channel	20	2.5	4	ft
z=	vertical drop from outlet to tailrace	8.5	7.5	3.5	ft
V_o =	initial velocity	25	8	12.2	fps
θ=	angle on entry (radians)	0.92	1.32	1.05	radians
q=	unit discharge	250	12	26.5	cfs/ft
H =	$z+V_o^2/2g$	18.20	8.49	5.81	ft
Maximum Scour Depth		**57.4**	**11.4**	**14.4**	ft
	Channel Depth Provided	70	13.9	17.5	ft
	Factor of Safety	1.2			
Based on Veronese Equation for ultimate scour, 1937 Scour Depth = $1.9H^{0.225}q^{0.54}$					
Maximum Scour Depth		**72.0**	**11.8**	**16.6**	ft
	Channel Depth Provided	70	11.4	16.1	ft
	Factor of Safety	1.0			

B-1.4. Full Flow Bypass Hydraulics

The design incorporates a four-foot wide by eight-foot tall rectangular tunnel with gated flow control for the full flow bypass. The assumed discharge coefficient for this orifice geometry varies based on preliminary CFD results. Discharge ranges from 230 cfs to 600 cfs per horn during single horn operation and from 300 to 600 cfs per horn for dual horn operation. Table 8 below provides hydraulic information for the various head and flow configurations for the various horns. Calculations assume no headloss from the forebay to the gate control.

Table 8. Full flow bypass gated flow.

Head Condition*	Low	H5 Max	Max	Low	H5 Max	H4 Max	Max	Low	H5 Max	H4 Max	Max
Full Flow Bypass (cfs)	230	230	230	300	300	300	300	600	600	600	600
Head (ft)	14.9	25.1	37.4	14.5	24.8	47.2	59.4	12.6	23.5	46.2	58.5
Gate Openning (ft)	2.41	1.79	1.41	3.24	2.44	1.69	1.47	7.06	5.01	3.63	3.23
% Open	0.30	0.22	0.18	0.41	0.31	0.21	0.18	0.88	0.63	0.45	0.40
Cd	0.77	0.80	0.83	0.76	0.77	0.81	0.82	0.75	0.77	0.76	0.76
Calc Flow (cfs)	230	230	230	300	300	300	300	600	600	600	600
Gate V (fps)	24	32	41	23	31	44	51	21	30	41	47
Vena Contracta Vel (fps)	31	40	49	31	40	55	62	28	39	55	61
Flow Depth (Vena Contracta) (ft)	1.9	1.4	1.2	2.5	1.9	1.4	1.2	5.3	3.9	2.8	2.4
Froude	4.0	5.9	8.0	3.4	5.1	8.3	9.9	2.2	3.5	5.8	6.9

Table 9 below identifies the anticipated minimum and maximum gate settings for each horn under the different operations.

Table 9. Full flow bypass gate settings.

	Min Single Horn 230 cfs		Min Dual Horn 300 cfs		600 cfs	
Gate Settings (ft open)	Min	Max	Min	Max	Min	Max
Horn 5	1.79	2.41	2.44	3.24	5.01	7.06
Horn 4	1.41		1.69		3.63	
Horn 1-3	1.41		1.47		3.23	

Shaping of Ogee

EM 1110-2-1603 spillway design guidance was used to establish the ogee shape of the steep slope section of the full flow bypass. The ogee equation below was used assuming K of 2, n of 1.85, an H_d of 60.1 feet for all horns except Horn 5 which used a H_d of 25.1 feet.

$$x^n = KH_d^{n-1}Y$$

where

x = horizontal coordinate positive to the right, feet
n = variable, however usually set equal to 1.85
K = variable dependent upon P/H_d
Y - vertical coordinate positive downward, feet

When flow exits from the full flow bypass gate it immediately enters the steep slope section of the primary bypass via the ogee shaping. The steep slope segment of the primary bypass is also a rectangular channel four feet wide by eight feet tall. The channel slope of this segment is 1:1 with an overall maximum elevation change of 122 feet from Horn 5. Table 10 below summarizes the anticipated depth and velocity of flow at the end of the full flow steep slope assuming release from Horn 5. Horn 5 was evaluated to determine minimum flow depths and maximum velocities at the base of the steep slope with a manning's value of n = 0.011. Horn 1 with an overall drop height of 34 feet and lateral distance of 89 feet from the gate to the toe was used to establish maximum flow depths and minimum velocities using a manning's of n=0.013. Results do not account for minor losses associated with the combination of flow or the discontinuities at junctions with non-operating horns.

Table 10. Full flow bypass steep slope hydraulic properties.

Full Flow Bypass Steep

Discharge (cfs)	230		600	
Mannings	Depth (ft)	Vel (fps)	Depth (ft)	Vel (fps)
0.011	0.75	77.1	1.77	84.6
0.013	1.27	45.4	3.05	49.1

Substantial air entrainment and bulking is anticipated with the configuration of the steep slope. HDC 050-3 design guidance based on unconfined spillway chute was used to establish estimated air entrainment values. The table below (Table 11) identifies expected air demand values for the full flow steep slope and includes suggested vent diameters assuming a maximum velocity of air of 150 fps. The design incorporates a 36" diameter air vent for each steep slope which would result in air velocities of 108 fps for an anticipated air demand of 765 cfs. Air demand for the primary bypass merges with the full flow bypass 36" vent, which should have adequate capacity to accommodate the primary bypass.

Table 11. Full flow bypass air demand.

Air Demand (HDC 050-3) =0.701*LOG(S/q^.2)+0.971

Flow (cfs)	230	300	600
S/q^.2	0.31	0.30	0.26
C	62%	60%	56%
Air Demand (cfs)	373	455	765
Vent Diameter (in)	21	24	30.6

Once flow exits the full flow steep slope it enters the deceleration tunnel. The deceleration channel segment of the full flow bypass continues as a rectangular channel four feet wide. The slope of this segment is 1.8% with an overall maximum elevation change of 22 feet over the length of the deceleration tunnel of 1219 feet. The full flow bypass channels expand to 5' wide at a distance of 576' downstream using a 1:10 expansion. Table 12 below summarizes the anticipated depth and velocity of flow at the location of expansion and at the end of the deceleration tunnel for the full flow bypasses. Evaluations for the rougher Manning's n value of 0.013 were checked for full flow bypass conditions with Horn 1 releases resulting in deeper/slower flows at the base of the steep slope.

Table 12. Full flow bypass deceleration tunnel hydraulic properties.

Full Flow Bypass Deceleration Tunnel

Discharge (cfs)	230		600	
Mannings' n	Depth (ft)	Vel (fps)	Depth (ft)	Vel (fps)
0.011	2.24	25.6	3.79	39.6
Transition to 5'	2.23	20.7	4.27	28.1
0.013	3.04	18.9	6.09	24.6
Transition to 5'	2.56	18.0	5.41	22.2

B-1.5. Tunnel Alignment

Calculations from HDC 660-1 and 660-2 were used to develop a spiral curve to transition flow from the end of the steep slope to the downstream channel. Design assumes downstream depth average velocities of roughly 85 fps with a rectangular channel that is four feet wide. Resulting minimum radius is 2016 ft and a minimum length of spiral of 85 ft. The design assumes (HDC 660-2) curve No. 90 identified below. The first 37.5 feet of horizontal spiral curve is incorporated within the vertical curve of the steep slope resulting in a total deflection of .052 ft followed by a 3800 ft spiral decreasing to 230 ft radii keeping values larger than the reported r_{min} in the table below.

Table 13. Tunnel alignment.

Minimum Radius Calculated

r_{min} (ft)	minimum radius of a simple curve, rapid flow, with or without invert banking	
V (ft/s)	velocity	
W (ft)	4	
g (ft/s^2)	32.2	
y (ft)	flow depth for the minimum expected friction factor	
Q (cfs)	600	

$$r_{min} = \frac{4V^2W}{gy}$$

n	Station	V	y	r_{min}	L
	(feet)	(fps)	(feet)	(feet)	(feet)
0	0	84.8	1.77	2016	82
1	12.5	82.8	1.81	1882	79
2	25	81.0	1.85	1759	76
3	37.5	79.2	1.89	1647	74
4	50	77.5	1.94	1543	71
5	62.5	75.9	1.98	1447	69
6	75	74.3	2.02	1358	67
7	87.5	72.8	2.06	1277	65
8	100	71.3	2.10	1201	63
9	112.5	69.9	2.15	1131	61
10	125	68.5	2.19	1066	59
11	137.5	67.2	2.23	1006	58
12	150	65.9	2.27	950	56
13	162.5	64.7	2.32	898	55
14	175	63.5	2.36	849	53
15	187.5	62.4	2.40	804	52
16	200	61.3	2.45	762	50
17	212.5	60.2	2.49	723	49
18	225	59.2	2.54	686	48
19	237.5	58.1	2.58	651	46
20	250	57.2	2.62	619	45
21	262.5	56.2	2.67	589	44
22	275	55.3	2.71	560	43
23	287.5	54.4	2.76	534	42
24	300	53.5	2.80	508	41
25	325	51.9	2.89	463	39
26	350	50.3	2.98	422	37
27	375	48.9	3.07	386	36
28	400	47.5	3.16	354	34
29	425	46.1	3.25	326	33
30	450	44.9	3.34	300	32
31	475	43.7	3.43	277	30
32	500	42.6	3.52	256	29
33	525	41.6	3.61	238	28
34	550	40.6	3.70	221	27
35	575	39.6	3.79	206	26

Minimum length of spiral for an unbanked curve (2)

L(ft) = minimum spiral length

$$L = 1.82\frac{VW}{\sqrt{gy}}$$

n	L	Radius	Angle	X	Y
	(feet)	(feet)	d°,m',s"	(feet)	(feet)
			No. 90 Curve		
0	0.0		00 00 00		0.0
1	12.5		00 01 30	12.500	0.003
2	25.0	7,162	00 06 00	25.000	0.016
3	37.5	4,775	00 13 30	37.500	0.052
4	50.0	3,581	00 24 00	50.000	0.120
5	62.5	2,865	00 37 30	62.499	0.232
6	75.0	2,387	00 54 00	74.998	0.398
7	87.5	2,045	01 13 30	87.496	0.630
8	100.0	1,790	01 36 00	99.992	0.938
9	112.5	1,592	02 01 30	112.486	1.333
10	125.0	1,432	02 30 00	124.976	1.827
11	137.5	1,302	03 01 30	137.462	2.429
12	150.0	1,194	03 36 00	149.941	3.152
13	162.5	1,102	04 13 30	162.411	4.005
14	175.0	1,023	04 54 00	174.872	4.999
15	187.5	955	05 37 30	187.319	6.145
16	200.0	895	06 24 00	199.750	7.455
17	212.5	843	07 13 30	212.162	8.937
18	225.0	796	08 06 00	224.550	10.604
19	237.5	754	09 01 30	236.911	12.465
20	250.0	716	10 00 00	249.239	14.531
21	262.5	682	11 01 30	261.529	16.812
22	275.0	651	12 06 00	273.775	19.317
23	287.5	623	13 13 30	285.971	22.057
24	300.0	597	14 24 00	298.109	25.041
25	312.5	573	15 37 30	310.182	28.279
26	325.0	551	16 54 00	322.182	31.780
27	337.5	531	18 13 30	334.099	35.551
28	350.0	512	19 36 00	345.924	39.603

B-1.6. Stilling Basin

The tailwater gage (HAHW) and the USGS gage #12105900 "Green River below Howard A Hanson Dam, WA" are both located approximately 3,500 feet downstream of the existing stilling basin (Figure 7). Manual readings of stilling basin staff gage location on the downstream end of the stilling basin structure are taken by project staff (Figure 8). 30 manual staff gage elevation readings along with the

corresponding HAHW flow data were collected and turned into the rating curve available below. If more data points are desired to extend the curve additional data is available at: Y:\Howard A Hanson Dam\HHD MANUAL WELL READINGS\Weekly Reads.

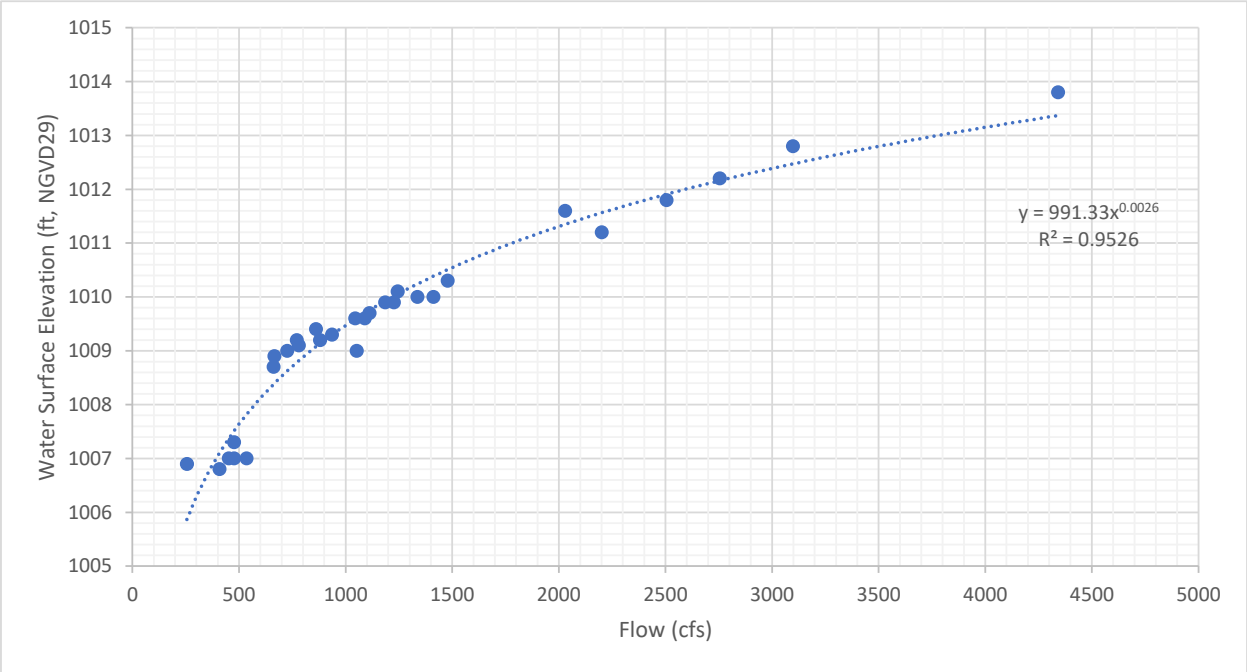

Figure 6. Stilling basin rating curve.

Table 14. Data used for stilling basin rating curve.

Date	Stilling Basin Staff Gage	Outflow	Tailwater Gage
	feet, NGVD29	*cfs*	*feet, NGVD29*
7/21/2021	1006.9	256	4.38
7/1/2021	1006.8	409	4.9
6/2/2021	1010.1	1245	6.75
6/8/2021	1009.2	881	6.08
6/17/2021	1009.3	936	6.19
6/29/2021	1007	477	5.12
6/23/2021	1008.9	666	5.61
5/20/2021	1009.9	1186	6.65
5/10/2021	1009.6	1090	6.48
4/2/2021	1009.1	781	5.87
3/5/2021	1009.6	1046	6.4
4/28/2021	1009	1052	6.41
2/26/2021	1011.8	2506	8.43
1/8/2021	1012.2	2755	8.7
2/5/2021	1009.2	771	5.85
1/29/2021	1009	726	5.75
1/22/2021	1010	1337	6.9
1/15/2021	1013.8	4342	10.17
2/12/2021	1009.4	861	6.04
11/27/2020	1009.9	1227	6.72
11/20/2020	1010.3	1479	7.12
10/15/2020	1007	535	5.28
12/11/2020	1009.7	1112	6.52
12/4/2020	1008.7	662	5.6
12/18/2020	1011.6	2030	7.87
10/2/2020	1007	453	5.05
10/23/2020	1011.2	2202	8.08
11/6/2020	1012.8	3098	9.05
10/9/2020	1007.3	477	5.12
10/30/2020	1010	1412	7.02

Figure 7. Tailwater Gage Locations.

Figure 8. Stilling Basin Staff Gage

Stilling Basin Design

EM 1110-2-1602 design guidance was used to size the stilling basin. The controlling flow condition was based on minimum manning's values for maximum head and flow conditions. Resulting incoming flow condition of 600 cfs with a flow depth of 4.3ft and velocity of 28.1 fps required a stilling basin with a depth of 14 feet. Assumed tailwater of 1008' is also associated with the flow of 600 cfs and the operation of a single horn. Basin was also checked at 230 cfs with a lower tailwater of 1006 to confirm adequate submergence to induce a hydraulic jump. Required submergence compared to actual depth for various apron elevations is provided in Table 15 below. Flow is transitioned from the deceleration tunnel to the apron of the stilling basin using a parabolic curve with initial slope equal to the deceleration tunnel and defined by the following:

$$y = -x \tan\theta - \frac{gx^2}{2\left(1.25\, V_{sm}\right)^2 \cos^2\theta}$$

Where: θ= 1.034 degrees

V_{sm} = 28.1 fps

Sidewall of the stilling basin expand at a slope of 1:6 with a basin apron length of 36 feet which is equal to 3 times its depth. Overall basin length equals the horizontal distance traveled on the parabolic transition plus the length of the apron which equals nearly 62 feet. The endsill of the apron is recommended to be ½ of d1 resulting in an endsill height assumed to be one foot tall with a flow facing slope of 2:1 to reduce potential for fish impact. Overall width of the basin starts at 13 feet wide and terminates with a width of 35 feet at the endsill.

Maximum tailwater of 1013.0 during a 4000 cfs river flow results in a tunnel submergence of six feet which is well below the required depth of 10 feet to induce a hydraulic jump within the tunnel during minimum flow operation assuming maximum roughness coefficients.

Table 15. Hydraulic jump calculations.

	(ft)	(ft)	(ft, NGVD29)	(fps)	(ft)		(ft)	
	Station	Width	Floor EL	v1	d1*	F1	d2*	Actual D
600 cfs	0	5.0	1007.0	28.1	4.3	2.4	12.5	1.0
	8.1	6.3	1006.0	30.5	3.1	3.1	11.9	2.0
	11.7	7.0	1005.0	31.9	2.7	3.4	11.8	3.0
	14.5	7.4	1004.0	33.2	2.4	3.7	11.8	4.0
	16.8	7.8	1003.0	34.3	2.2	4.0	11.7	5.0
	18.9	8.1	1002.0	35.4	2.1	4.3	11.7	6.0
single side	20.8	8.5	1001.0	36.4	1.9	4.6	11.7	7.0
	22.5	8.7	1000.0	37.4	1.8	4.9	11.7	8.0
	24.1	9.0	999.0	38.3	1.7	5.1	11.7	9.0
	25.6	9.3	998.0	39.2	1.7	5.4	11.8	10.0
	27.0	9.5	997.0	40.1	1.6	5.6	11.8	11.0
	28.4	9.7	996.0	40.9	1.5	5.9	11.8	12.0
230 cfs check	28.4	9.7	996.0	35.2	0.7	7.6	6.9	10.0

*where d1 = upstream depth in hydraulic jump, d2= downstream depth in hydraulic jump

B-1.7. Downstream Preformed Scour Hole

The downstream preformed scour hole helps to dissipate any additional energy coming off the full flow bypass stilling basin. The stilling basin is split with a design flow of 600 cfs per side. The preformed scour hole at a maximum will see flow from both sides for a total of 1,200 cfs. In addition, the fish passage will be operated up to a total in river flow of 4,000 cfs. At 4,000 cfs the total flow above what is released from the fish passage will be passed through the normal regulating outlet, which is upstream of the fish passage stilling basin. This flow does sweep over the preformed scour hole area.

Even though 4,000 cfs is not passed through the fish passage stilling basin the corresponding design tailwater of 1013.2 feet NGVD29 was used for the preformed scour hole. This provides a conservative design for scour hole depth and length.

Table 16. Preformed scour hole calculations

Description	***Variable***	***Value***	***Unit***	***Notes***
Design Tailwater		1013.2	feet ngvd29	
Hydraulic Jump Downstream Depth	D_2	17.2	feet	
Depth Below Stilling Basin	$0.15*D_2$	2.58	feet	
Length from Endsill to Invert	$0.5*D_2$	8.6	feet	
Scour Hole Width	*2B*	70	feet	
Stilling Basin Bottom Elevation		996	feet ngvd29	
Preformed Scour Hole Invert		993.42	feet ngvd29	
Side Slope		3:1	ft:ft	side slope taken from HDC 722-6
Channel Invert Elevation		1005	feet ngvd29	approximated

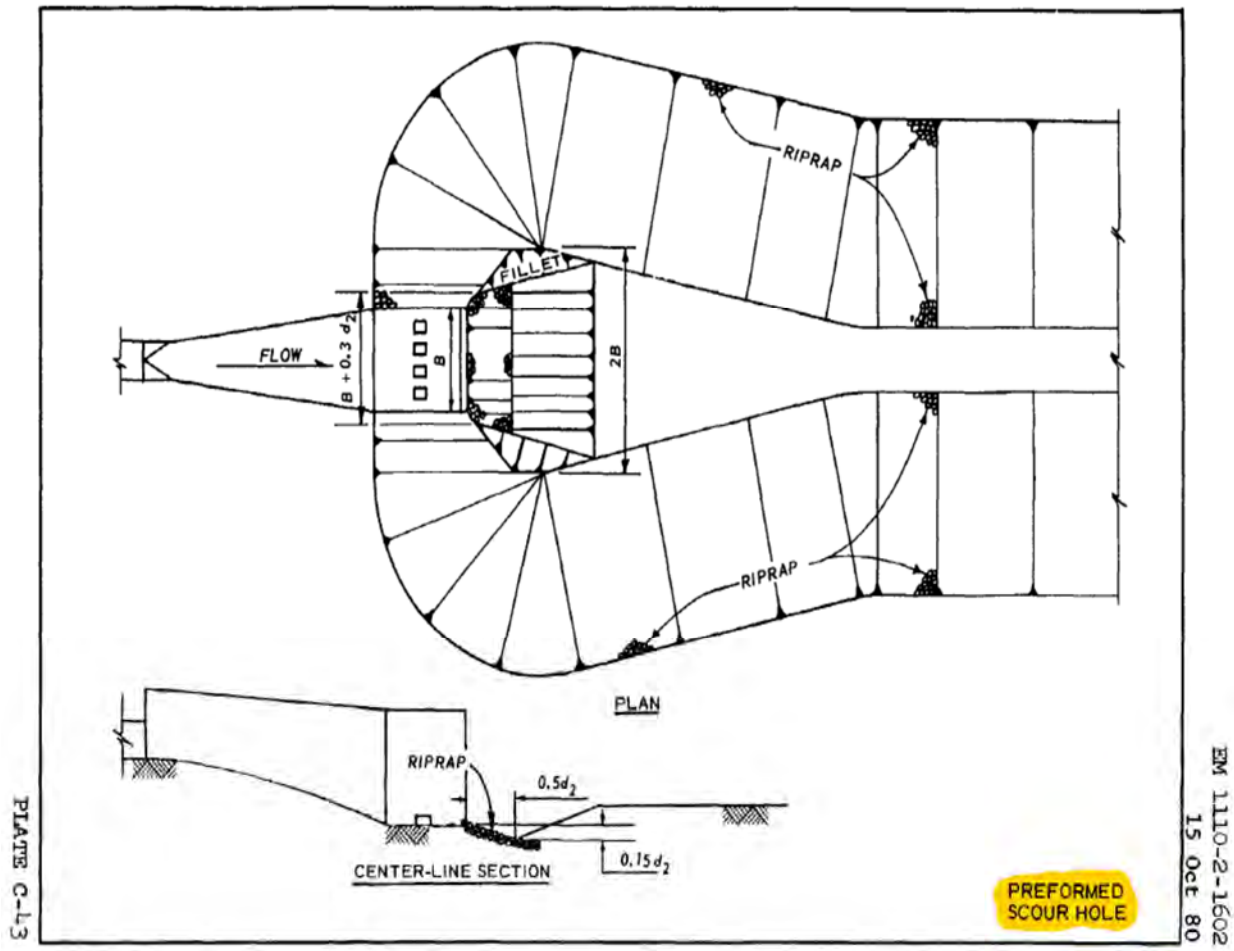

Figure 9. Preformed scour hole design guidance.

Howard A. Hanson Dam
Additional Water Storage Project

Section 902 Post Authorization Change Validation Study – Fish Passage
King County, Washington

APPENDIX B-2

CFD MODELING

Final Integrated Validation Report and

Supplemental Environmental Impact Statement

US Army Corps of Engineers®
Seattle District

TACOMA POWER
TACOMA WATER
TACOMA RAIL
TACOMA PUBLIC UTILITIES

CFD Appendix

CFD Modeling for Howard A. Hanson Dam Fish Passage Facility

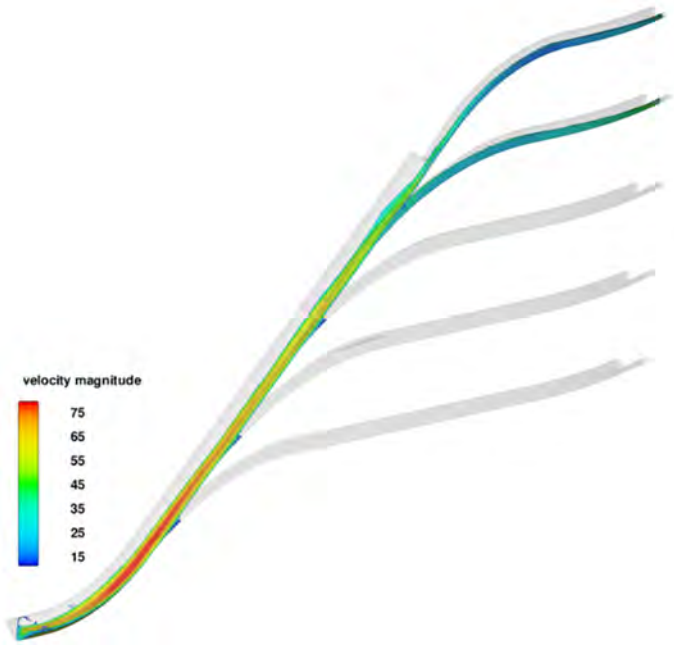

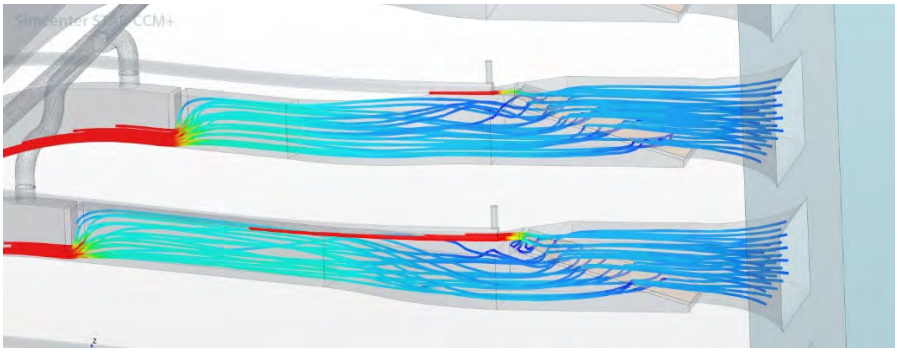

April 2022

Designers:

Aaron Litzenberg, P.E. Date: 15Jan2022

Ryan Laughery, P.E. Date: 15Jan2022

Reviewers:

Shari Dunlop, P.E. Date: 18Feb2022

Contents

CFD Modeling Overview – 4
Background: 4
Model 1: Upstream Region 6
Model Overview 6
Grid Development 6
Boundary Conditions 8
Setting Porous Baffle Boundary Conditions 9
Model Validation 10
Results 14
Discussion 24
Model 2: Steep Slope 25
Model Overview 25
Grid Development 25
Boundary Conditions 25
Model Validation 25
Metrics 25
Results 25
Discussion 36

Figures

Figure 1 - Upstream Model Domain 6
Figure 2 - Mesh Density Example 7
Figure 3 – Mesh Refinement Areas 8
Figure 4 - HAHD Non-Exceedance Stats 9
Figure 5 - Porosity Calculations 10
Figure 6 - Mesh Comparison 11
Figure 7 - Velocity Profile Comparison 12
Figure 8 - CFD vs Physical Model Data Collection 13
Figure 9 - CFD vs Phys. Vn/Vo 13
Figure 10 - CFD vs Phys. Vs/Vn 14
Figure 11 - Run 1 Output Metrics 14
Figure 12 - Run 1 VoF 15
Figure 13 - Run 1 Velocity Profile (top conduit – Horn 5, bottom conduit- Horn 4) 16
Figure 14 - Run 1 Streamlines (top conduit – Horn 5, bottom conduit- Horn 4) 16
Figure 15 - Run 1 Through Screen Velocities (top screen – Horn 5, bottom screen- Horn 4) 17

Figure 16 - Physical Model Ratio of Vn to Vo (screen normal to enclosure velocity) 18
Figure 17 - Physical Model Ratio of Vs to Vn (sweeping flow to screen normal) 18
Figure 16 - Run 1 Pressure Profile (top conduit – Horn 5, bottom conduit- Horn 4) 19
Figure 17 - Run 1 SSB 4 Pressure 19
Figure 18 - Transition Change 20
Figure 19 - Run 1b Metrics 20
Figure 20 - Run 1b Pressure Profile (top conduit – Horn 5, bottom conduit- Horn 4) 21
Figure 21 - Run 1b Collector 4 Pressure Profile 21
Figure 22 - Run 3 Metrics 22
Figure 23 - Run 3 Streamlines (top conduit – Horn 3, bottom conduit- Horn 2) 22
Figure 24 - Run 7 Metrics 23
Figure 25 - Run 7 Pressure Profile Collector 3 23

Tables

Table 1 - CFD Boundary Conditions 9
Table 2 - Mesh Validation Flow Comparison 11
Table 3 - Upstream CFD Output 1 24
Table 4 - Upstream CFD Output 2 24

CFD Modeling Overview –

Background:

The Howard A. Hanson Dam (HAHD) Fish Passage Facility (FPF) project is tasked with developing a feasible design to pass juvenile salmonids and Steelhead Kelts from the reservoir at HAHD to the river downstream. The innovative design uses a previously developed concept by Seattle District (NWS) for a five-port fish collector, which utilizes Modular Incline Screens (MIS) to separate the bulk attraction flow from the fish-laden water and combines the collector with a Steep Slope Bypass (SSB) based on previous fish study conducted at Green Peter Dam (GPR). As this is a unique concept, a modeling effort was completed to inform the design and provide confidence in the feasibility of the passage system. Computational Fluid Dynamics (CFD) modeling was selected as the modeling tool for this phase of design, due to limited schedule and budget during the feasibility study. Physical modeling is anticipated once the project is fully funded and proceeds to further design.

Due to the nature of flow through the system, two different CFD modeling codes were used to evaluate the FPF design. Star-CCM+ was used for the pressurized portions of the system, focusing on the entrance to the collectors and passing water through both the SSB and the Emergency Bypass (EB), up until the flow transitions to free surface non-pressurized. Due to time constraints, the initially selected runs were pared down to 3 scenarios for the upstream region. These runs were used to simulate various conditions of interest at the project. Pre-Construction, Engineering, and Design (PED) phase will include several more to comprehensively evaluate the range of forebay and operations conditions.

Flow3D was used for the free surface flow modeling, from the exit of the pressurized system down the steep slope and into the stilling basin, due to its ability to accurately track and visualize the fluid free surface under highly turbulent and aerated flows. For the SSB two scenarios of flow rate and horn operation were evaluated. One operating scenario was evaluated in the EB. Both modeling results will be presented in this report.

It should be noted that these CFD efforts were completed as a very preliminary check on the direction of the design. Enough information was collected for the team to be confident in the ability of the FPF Recommend Plan to function to meet BiOp criteria, though some aspects of the design will surely be optimized as CFD continues through PED phase. Several scenarios – and an accompanying comprehensive CFD report – are expected in PED for both the SSB and the EB features.

Development and documentation of the CFD efforts in PED phase are expected to follow an outline similar to the steps below:

1. Physical Domain Development
2. Model Development: Describe in detail the boundary (BC) and initial condition (IC) options, meshing geometry and size options, turbulence closure options, and criteria for achieving steady-in-the-mean convergence.
3. Model Refinement: Conduct sensitivity analyses for BC, IC and meshing options. Inform the choice of closure model and convergence by referencing current literature or completed peer projects.
4. Scenario Develop: Describe the scenarios to be modeled (flows, head levels, etc.). Describe the relevance of these scenarios to the project and discuss the quality and sources of information on which the scenarios are based.

5. Target Metrics: Describe the target metrics relative to fish damage and mortality (velocities, shear, compression rates, etc.). Disclose the source and justification for the numeric metrics. Present in detail the way that CFD model output is post-processed to calculate numeric estimates of the metrics from model simulations. Confirm that the post-processing is consistent with the methods used for developing or observing the metrics in source studies.
6. Simulations: Perform scenario simulations and present relevant model results including hydraulic and fish passage metrics.
7. Validation: Rudimentary validation could start with comparisons to 1-D hydraulic modeling or by contrasting results with completed peer projects. Final validation may be delayed, noting on the prospects for physical modeling.

Model 1: Upstream Region

Model Overview

The upstream potion of the FPF, including the bell-shaped entrances to the collectors, the MIS screens, and the flow control for both the SSB and the EB, were modeled using Star-CCM+, due to the meshing capabilities. Star-CCM+ has multiple meshing options, but the poly mesh option is ideal for analyzing flow that doesn't move in a linear fashion (compared to using a trimmer, or rectangular-based, mesh). Also, with the ability to model multiple fluids, a free-surface modeling approach could be utilized that would give accurate depictions of aerated gate flows on the system. Cd values and flowrates from the upstream CFD modeling was used to inform the upstream boundary conditions of the Flow3D modeling

The model domain includes an arbitrary headbox used to represent the forebay, which was large enough to prevent boundary effects on the flow solution. A similar setup was used for the tailwater, which was defined below the outflow of the SSB and EB outlets to prevent influence on the solution. An overview of the modeling domain is shown in Figure 1.

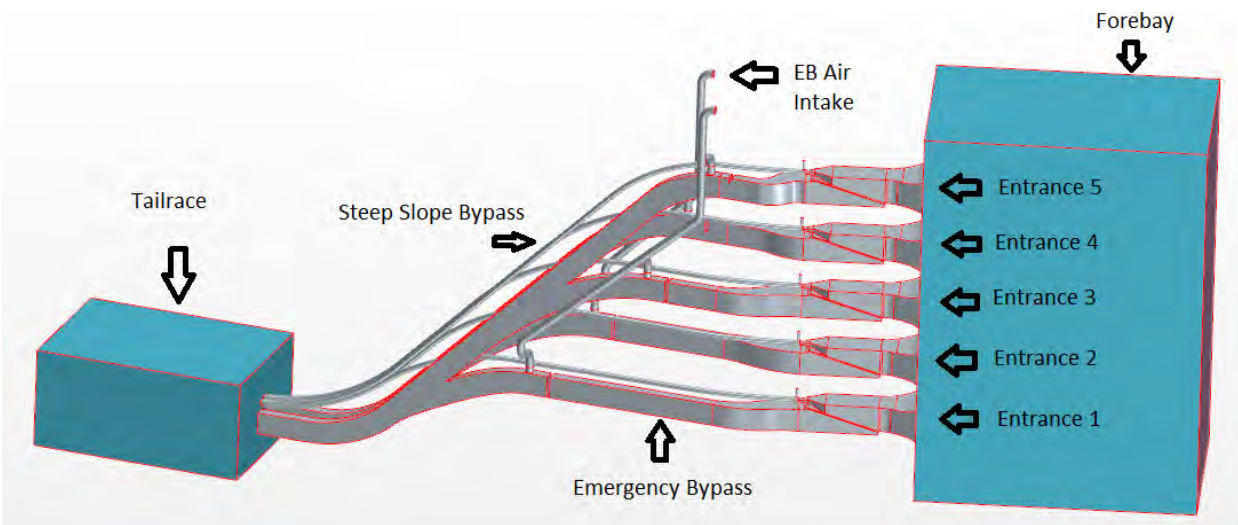

Figure 1 - Upstream Model Domain

Model geometry was provided from the previous DDR design of the HAHD FPF and altered to include the newly proposed SSB and EB conduits and gates. The results from preliminary modeling were used to inform design changes in geometry and evaluated against the design criteria defined in the Engineering Appendix. The CFD model 1 (upstream) still uses a 16" orifice that discharged into a 24" pipe. Because there is orifice control here, at the transition from pressurized to free flow, it is assumed it would be analogous on the upstream end to discharging into a u-shaped flume which would also be atmospheric, and not affect the backwater upstream for design. Note that the current primary bypass design is for a 16" OD U-shaped pipe downstream of the orifice control.

Grid Development

The grids for the CFD model runs were created in Star-CCM+ version 15.04. The development of the model grid parameters to be used for CFD model runs was an iterative process that involved testing and

adjusting grid development strategies. Mesh refinements were also used, when more or less cell density was needed based on areas of interest in the model.

A final computational grid was developed, using Polyhedral cell meshing:

- Base grid: 1 ft cells, four prism layers, total prism layer thickness of 0.1 ft
- Volume Refinement within the SSB and EB Air Supply Pipes: 0.1 ft cells
- Prism Layer Refinement at the MIS screens: turned off prism layers
- Surface Refinement in the forebay and tailrace: 2.5 ft target surface size, 1 ft minimum size
- Volume Refinement in the forebay and tailrace, at Free Surface: 0.5 ft cells

An example of the mesh is shown in Figure 2, and the refinement areas are shown in Figure 3.

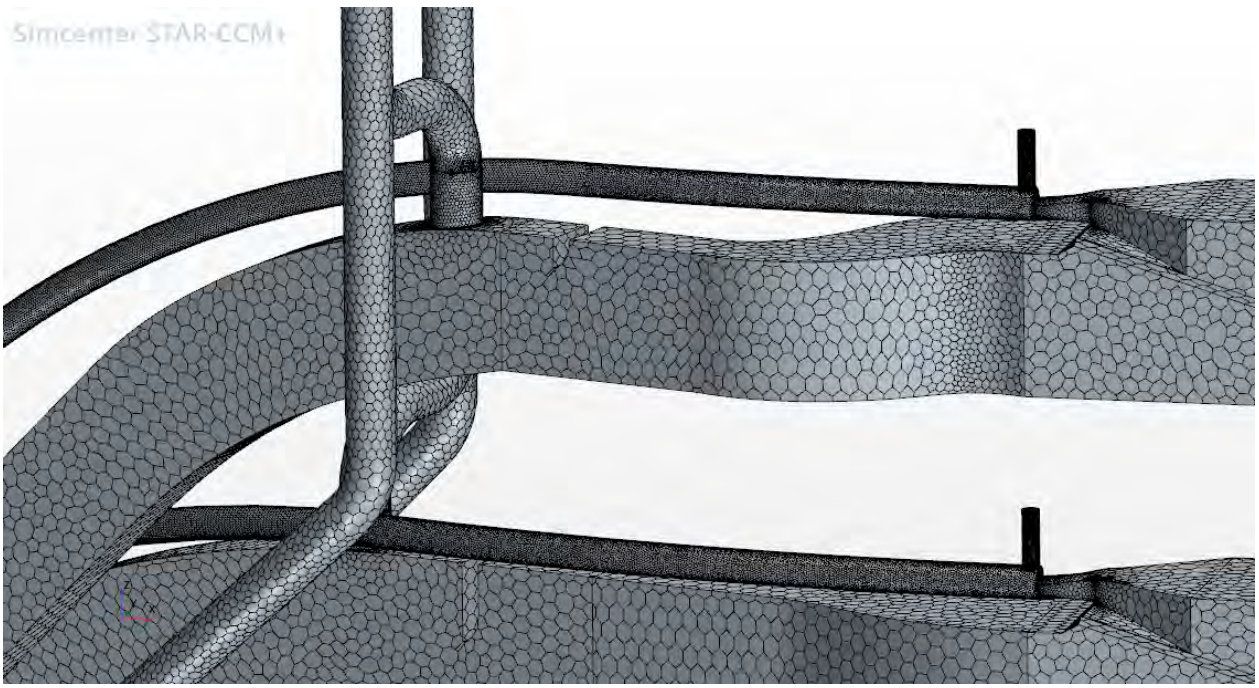

Figure 2 - Mesh Density Example

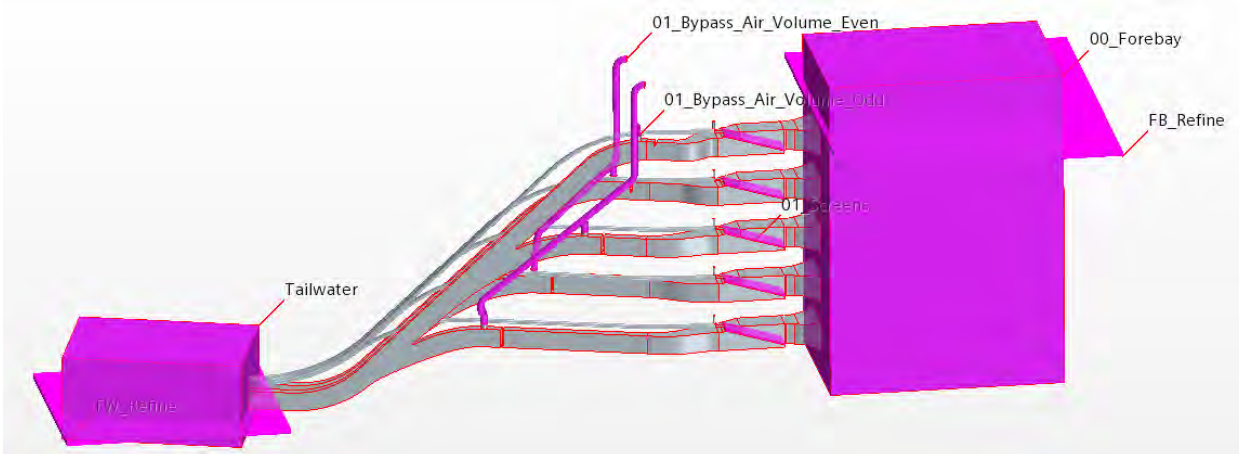

Figure 3 – Mesh Refinement Areas

The final mesh was comprised of near four million cells, depending on gate openings.

Boundary Conditions

The boundary conditions in the Upstream model were:

- A stagnation inlet boundary with static hydraulic pressure set at various elevations in the forebay
- A pressure outlet in the tailrace set at 1028 ft elevation, passing all flow that came into the model

The MIS screens were modeled as porous baffles and assigned the appropriate loss value to model the effect of head loss through the screens and porosity plates. An explanation on how these values were set is included in the next section.

All other region boundaries were set as default wall boundaries, including the concrete, gates, and pipes. Non-structural walls in the CFD model were placed sufficiently far enough away from the area of interest and were set as symmetry boundaries, which prevents any frictional effects. Flow through the model was adjusted based on which collectors were operating, and an estimated control gate opening was set.

An analysis of HAHD outflow and forebay elevation, over the period of record (POR), was used to inform the boundary conditions. A summary of the non-exceedance statistics is presented in the graph in Figure 4. Based on this analysis, the boundary conditions in Table 1 were selected for CFD analysis.

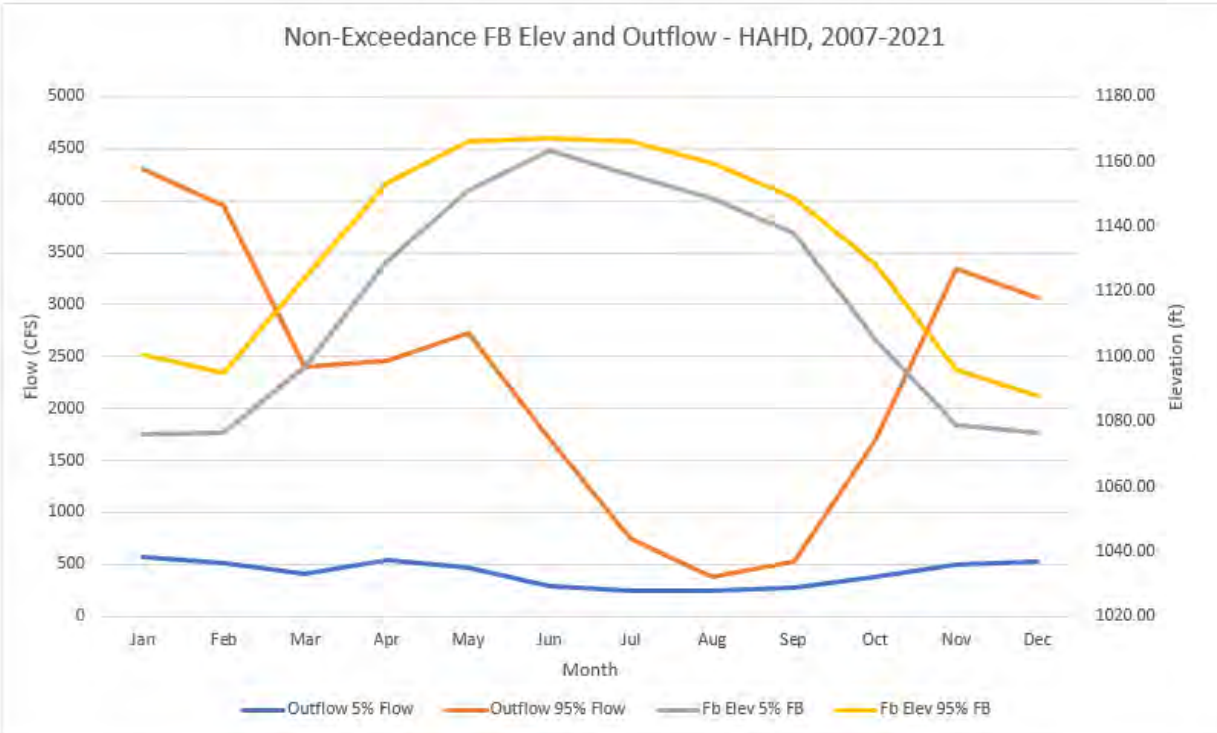

Figure 4 - HAHD Non-Exceedance Stats

Table 1 - CFD Modeling Scenarios

								Top Horn			Bottom Horn		
#	FB Elevation	Outflow Total	Collector Flow	Top horn #	Bottom horn #	Top horn cfs	Bottom horn cfs	Fish Pipe	Bypass		Fish Pipe	Bypass	
	ft	cfs	cfs					Flow	Flow	Gate Setting	Flow	Flow	Gate Setting
1	1167	2500	1200	5	4	600	600	23	577	5.9	44	556	4
2	1167	230	230	5	N/A	230	N/A	23	207	2.1	N/A	N/A	N/A
3	1142	500	650	3	2	325	325	42	283	2	56	269	2
4	1142	2500	1200	3	2	600	600	42	558	3.9	56	544	3
5	1101	4000	1200	2	1	600	600	23	577	5.9	44	556	4
6	1076	600	600	1	N/A	600	N/A	18	582	6.5	N/A	N/A	N/A
7	1166	1200	1200	4	3	600	600	42	558	4	62	538	2

Due to time constraints, the initially selected runs were pared down to runs 1, 3, and 7 (highlighted in Table 1). These runs were used to simulate various conditions of interest at the project; run 1 was used to show full flow through two collectors at full pool, run 3 was used to investigate low flow split between two horns under normal head conditions, and run 7 simulated the forebay dropping below submergence criteria for the upper horn, and the need to switch to a lower horn with high head. These flowrates and gate settings were adjusted as the modeling progressed, to key in on discharge coefficients for the SSB and EB.

Setting Porous Baffle Boundary Conditions

Porous baffles in Star-CCM+ calculate head loss through an interface based on Darcy's Law, describing flow through a porous media:

Equation 1 - Darcy's Law

$$\Delta p = -\rho\left(\alpha\left|v_n\right| + \beta\right)v_n$$

where:

- v_n is the superficial velocity normal to the surface.
- α is the user-specified constant **Porous Inertial Resistance**.
- β is the user-specified constant **Porous Viscous Resistance**.
- ρ is the fluid density at the interface.

To make the pressure loss of flow through a porosity plate or screen analogous to Darcy's Law, the minor loss portion from the Conservation of Energy Equation was equated to Darcy's Law, and reduced to the following equation:

<u>Star-ccm+ porous baffle pressure drop equation:</u>

Darcy's Law:

$$\Delta p = \rho(\alpha|v_n| + \beta)v_n \quad \Rightarrow \quad \frac{\Delta p}{\gamma} = \frac{\rho}{\gamma}\left(\alpha v_n^2 + \beta v_n\right)$$

$$\gamma = \rho g \quad \Rightarrow \quad \frac{\rho}{\gamma} = \frac{1}{g} \quad \Rightarrow \quad \frac{\Delta p}{\gamma} = \frac{1}{g}\left(\alpha v_n^2 + \beta v_n\right)$$

Minor Headloss Equation:

$$\frac{\Delta p}{\gamma} = h_L = K\frac{v^2}{2g} \quad \Rightarrow \quad K\frac{v^2}{2g} = \frac{1}{g}\left(\alpha v_n^2 + \beta v_n\right)$$

$$(\beta) = 0 \quad \Rightarrow \quad K\frac{v_n^2}{2} = \left(\alpha v_n^2\right)$$

$$\frac{K}{2}v_n^2 = \alpha v_n^2 \quad \Rightarrow \quad \boxed{\frac{K}{2} = \alpha}$$

Figure 5 - Porosity Calculations

From a previous physical modeling report (AECOM, 2011), a loss value of K = 7 was estimated for the MIS screens. This correlated to a porous inertial resistance factor of 3.5.

Model Validation

Two different validation methods were used for the Upstream model: a mesh validation, and a solution validation. A standard mesh validation was conducted, to verify that the solution from the model was mesh independent. This is done by increasing the number of cells and checking to see if the solution changes. The base size of the mesh was doubled, but due to the refinement areas the total number of cells wasn't doubled. The initial cell count was near 4 million cells, and the refined mesh was closer to 5.3 million. A comparison of the cell count is presented in Figure 6.

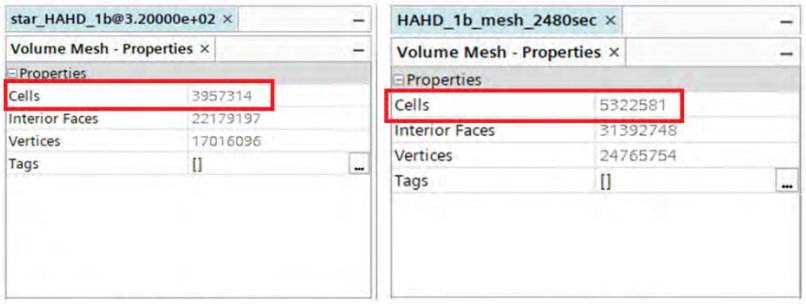

Inital Mesh Dense Mesh

Figure 6 - Mesh Comparison

The flowrates measured from each of the outlets are shown in Table 2. All differences in flow were less than 1% between the initial mesh and the denser mesh, with the maximum difference of ~5 cfs at the EB #4. A visual inspection was also preformed and is presented in Figure 7.

There was a near 1ft/sec difference in velocity directly downstream of the MIS boundaries due to the change in mesh density, but the velocities came back into good comparison between the models directly downstream of that. Because the screens were being modeled without the porosity plates, the velocity directly downstream of the screens was not measured for this modeling effort, and the flow renormalized between the models near a foot downstream of the screens, the difference was not deemed as a major concern. There was also a velocity difference in the full flow bypass, downstream of the control gates, but since the flowrates were within 1% of each other and the open channel flow was being modeled in the Flow3D model, it wasn't a major concern for this model. No major flow differences in areas of importance were observed between the two models, based on velocity profiles through the center of the models.

Table 2 - Mesh Validation Flow Comparison

Outlet	Original Mesh	Dense Mesh	% diff
	cfs	cfs	cfs
F5	587.4	588	-0.10%
F4	512.8	517.6	-0.94%
SS5	28.77	28.57	0.70%
SS4	55.52	55.49	0.05%

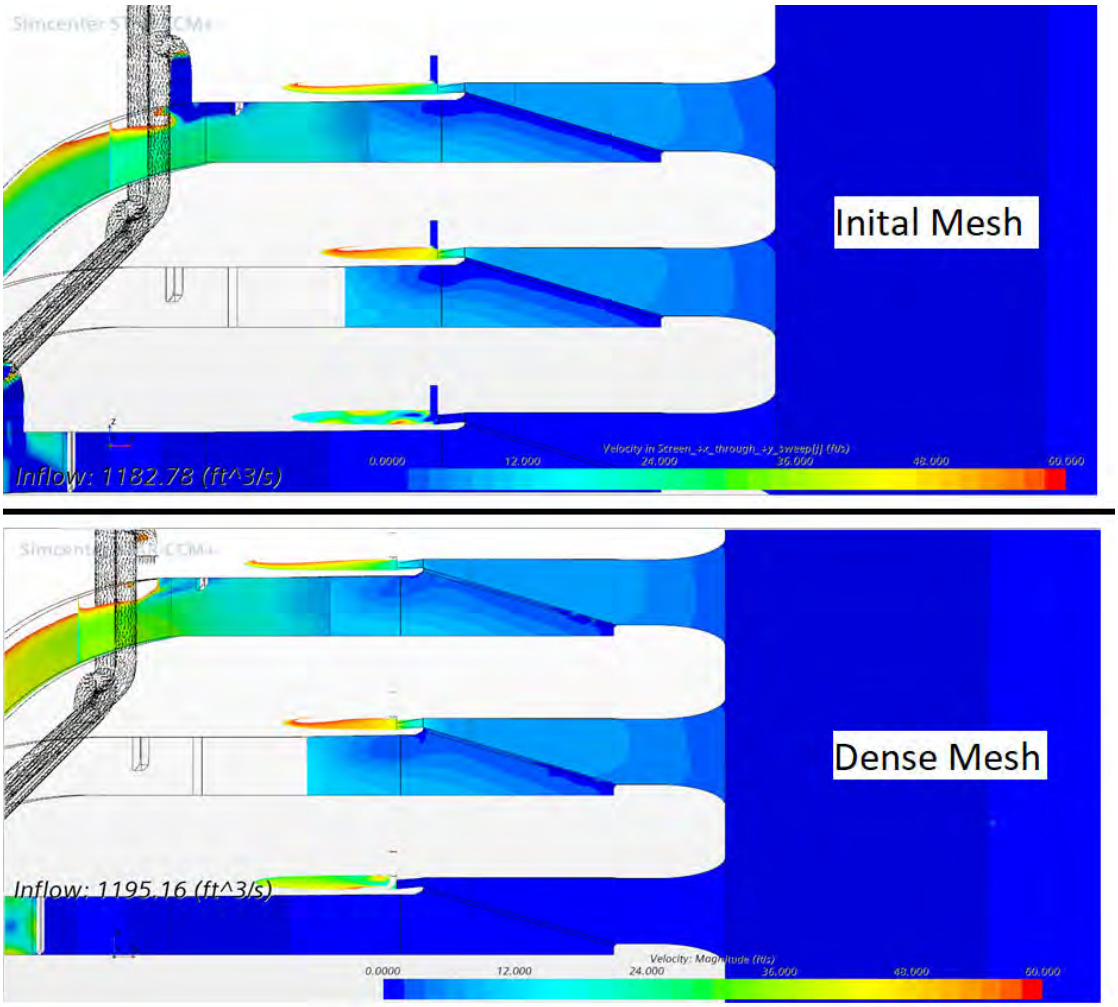

Figure 7 - Velocity Profile Comparison

The CFD model results were also compared to the physical modeling results from the 2011 AECOM model. In the physical model, the original modeling was completed using only the screens with no porosity plates, which corresponded to the K = 7 value. Velocity measurements were taken on a grid pattern on the MSI screens, with a total of seven rows and five columns. Due to the transition geometry, not all points had flow through the screens, and a total of 33 points were used for data collection. This was reproduced in the CFD model, and a comparison of the physical model data collection layout to the CFD layout is shown in Figure 8.

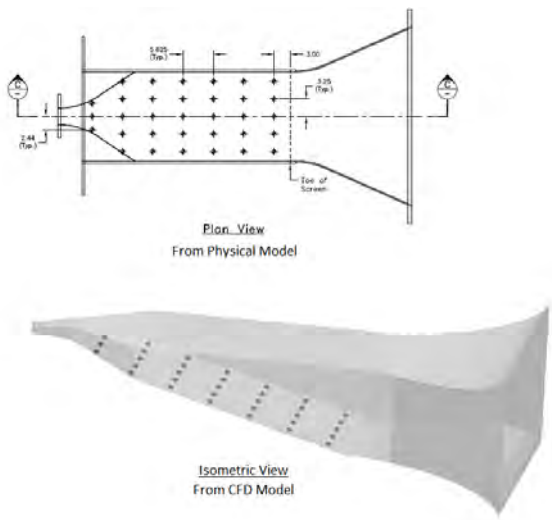

Figure 8 - CFD vs Physical Model Data Collection

The two main parameters measured in the physical model were the non-dimensional velocity profile of screen approach flow velocity (Vn) divided by the average total velocity in the approach section (Vo), and a similar comparison looking at the screen sweeping flow velocity (Vs) divided by screen approach flow velocity. The physical model looked at 10 different preliminary enclosure tests (PET's) for screen metrics, varying operating collector, total facility flow, total bypass flow, and pool elevation. With all the variation, the overall trends of flow distribution on the screens was relatively uniform. The data from both the CFD and physical model showed a similar velocity distribution over the width of the screens, so the data points for each row were averaged, and graphed with respected to non-dimensional distance along the screen (x/L). The comparisons between the CFD model and physical model velocity distributions are shown in Figure 9 and Figure 10, and overall the data compares well between the two models.

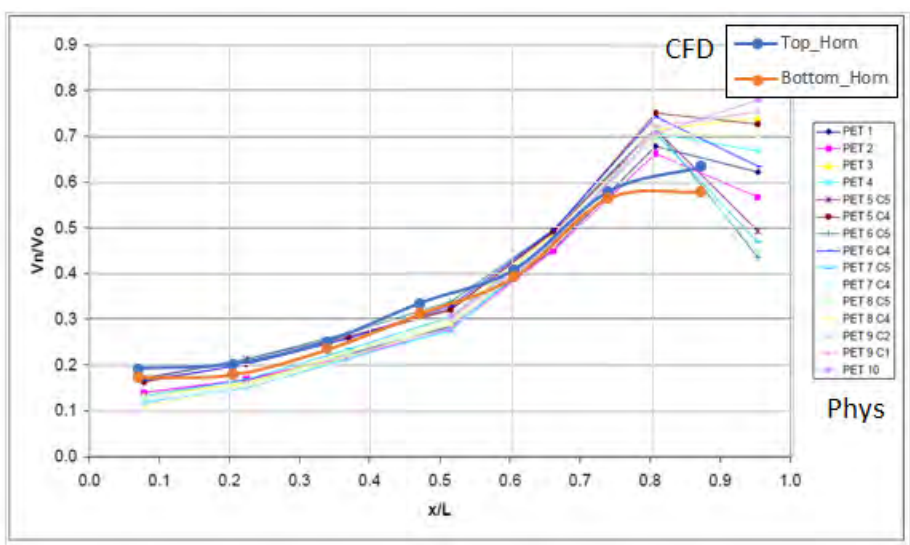

Figure 9 - CFD vs Phys. Vn/Vo

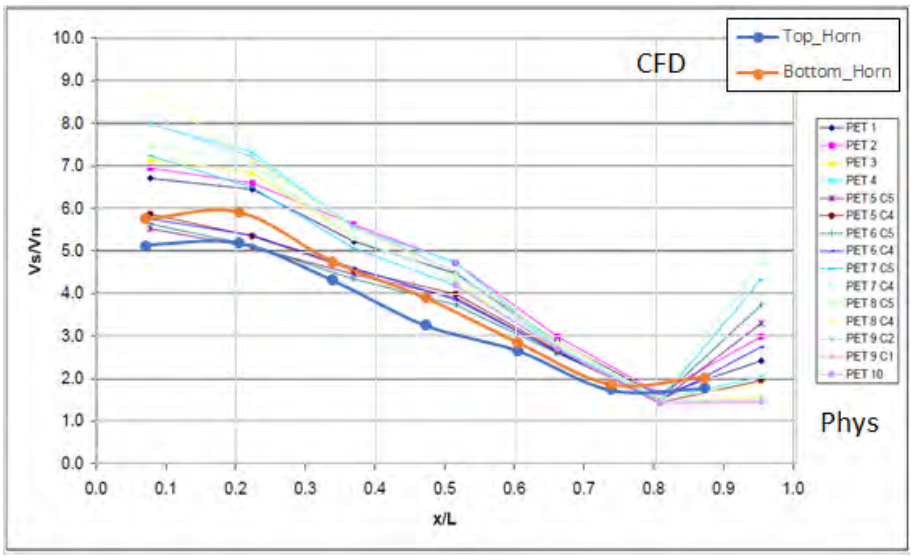

Figure 10 - CFD vs Phys. Vs/Vn

Results

The first model run utilized the initial geometry and was intended to look at the top two collectors operating under full capacity, with a full forebay elevation. The forebay in the model was set to elevation 1167 ft, and the EB gates 5 and 4 were supposed to be set to openings of 5.9 and 4 ft, respectively. Due to an error when inputting the boundary conditions, EB 4 was accidentally set to 2.1 ft, which provided less flow to the model than intended. Even with the incorrect boundary settings, the model could still be analyzed for discharge coefficients (Cd's) and checked for any areas of concern. All calculated Cds are presented at the end of the results section in Table 4. The output metrics from Run 1 are shown in Figure 11.

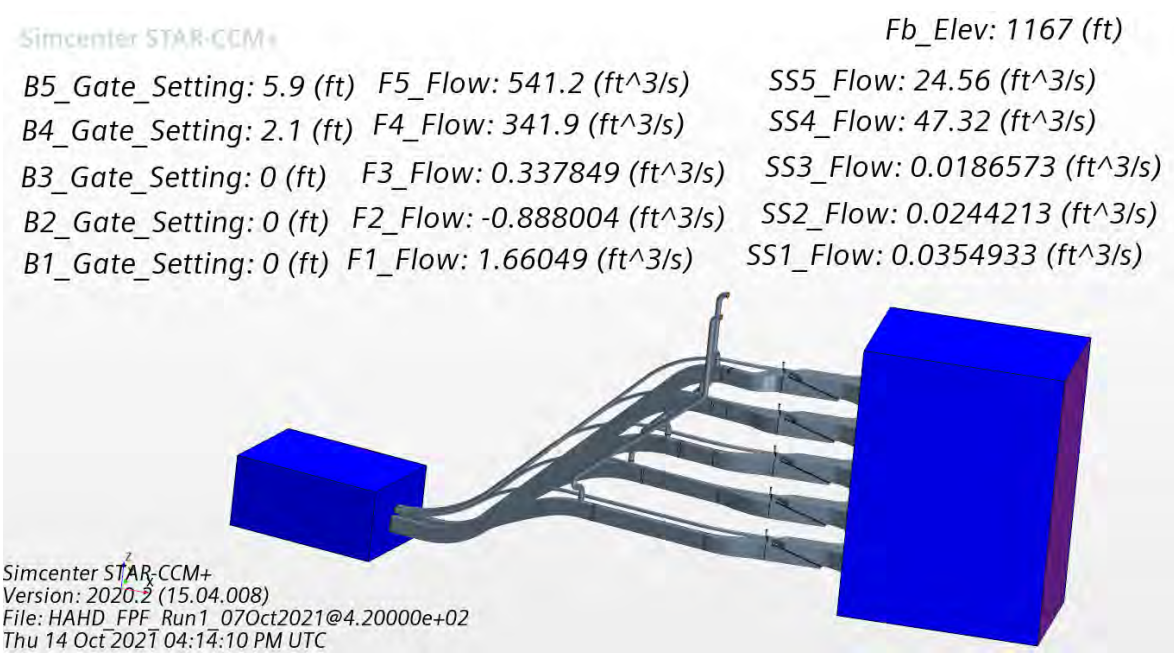

Figure 11 - Run 1 Output Metrics

Collector 5 passed a total of 566 cfs, with 25 cfs through the SSB and 541 cfs through the EB. Due to the accidental small gate opening, collector 4 passed a total of 389 cfs, with 47 cfs through the SSB and 342 cfs through the EB. The volume fraction (VoF) of water was mapped on a cross section of the model, to check if each outlet was transitioning from pressurized to free surface flow correctly. Area with a VoF equal to one are completely filled with water, and VoF of zero is solely air. Figure 12 shows that the model did transition to free surface downstream of each control gate in the EB, and after the expansion from 16-inch to 24-inch pipe in the SSB. It also shows that flow becomes highly aerated as it moves downstream, but this was not a main area of interest for the Upstream model.

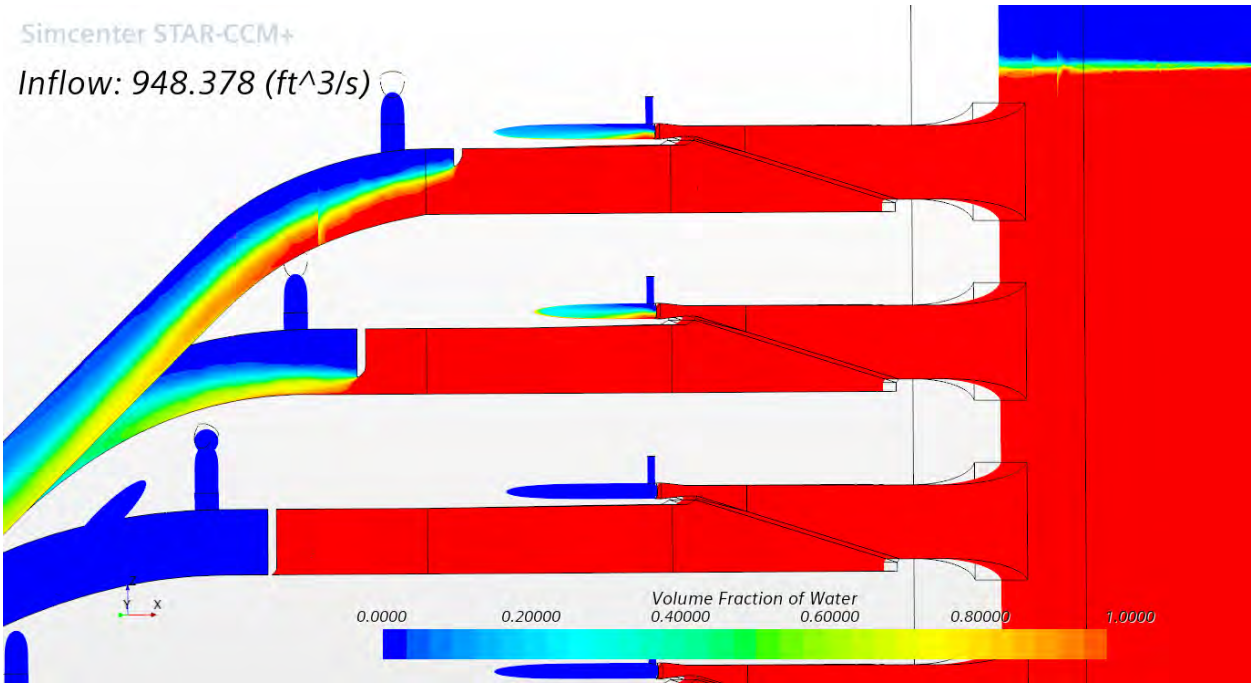

Figure 12 - Run 1 VoF

Areas of interest in the model were broken down into two areas: flow moving into the collector and into the steep slope bypass pipes, which represents fish-laden water, and flow moving through the MIS screens and through the emergency bypasses. Figure 13 shows the flow velocity profile through Collectors 5 and 4. The proposed transitions from the back of the collector for the EB to the EB conduits was an area of concern, due to the tortuosity and potential impacts on the MIS screens, but the velocity profiles showed that the transitions didn't influence flow through the screens. The streamlines through the system (Figure 14) also appear to be well-distributed, with little rotation.

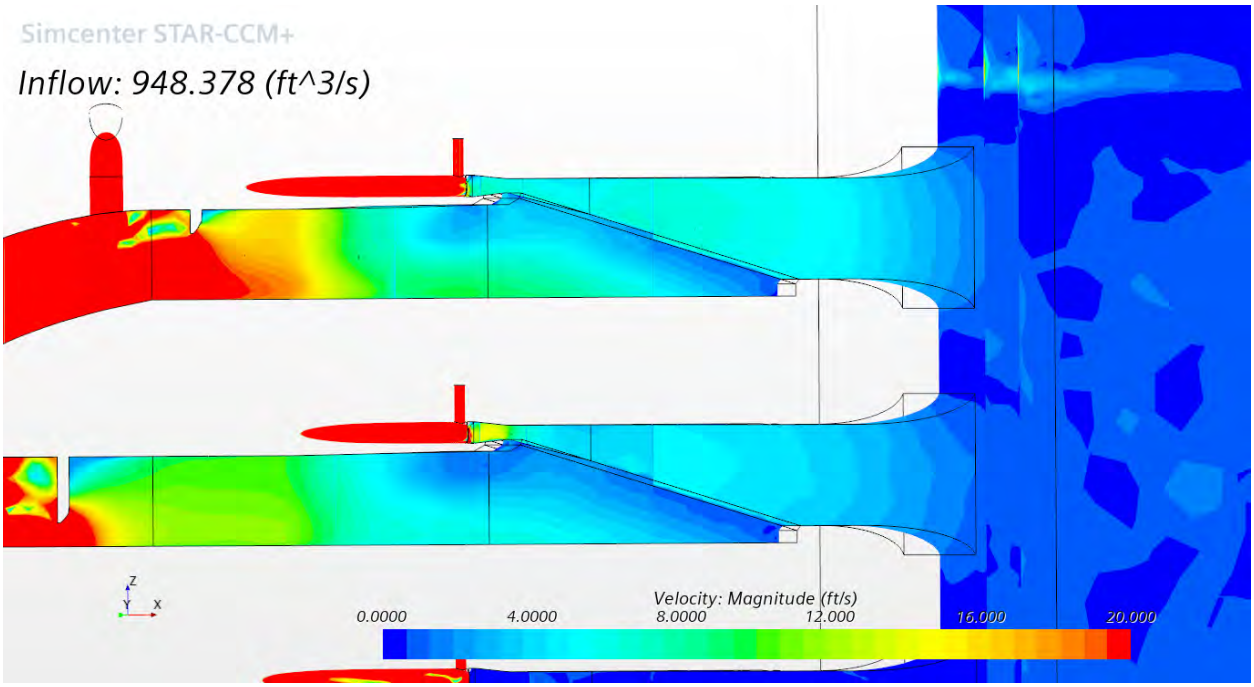

Figure 13 - Run 1 Velocity Profile (top conduit – Horn 5, bottom conduit- Horn 4)

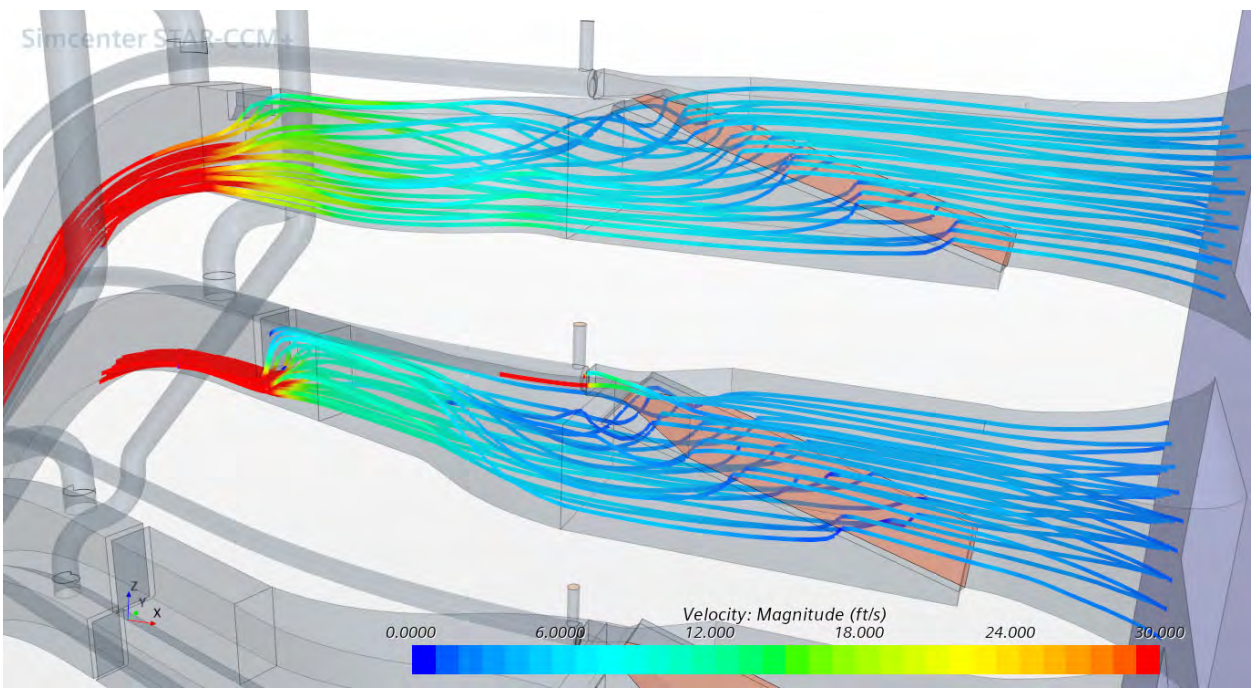

Figure 14 - Run 1 Streamlines (top conduit – Horn 5, bottom conduit- Horn 4)

The velocity distribution through the screens is shown in Figure 15, and the results match the findings from the physical model: without porosity plates to modify the distribution, there is more flow passing through the screens on the downstream end. The physical model showed that by varying the porosity of

the porosity plates, the flow could be redistributed adequately and therefore didn't need to be investigated in the CFD model.

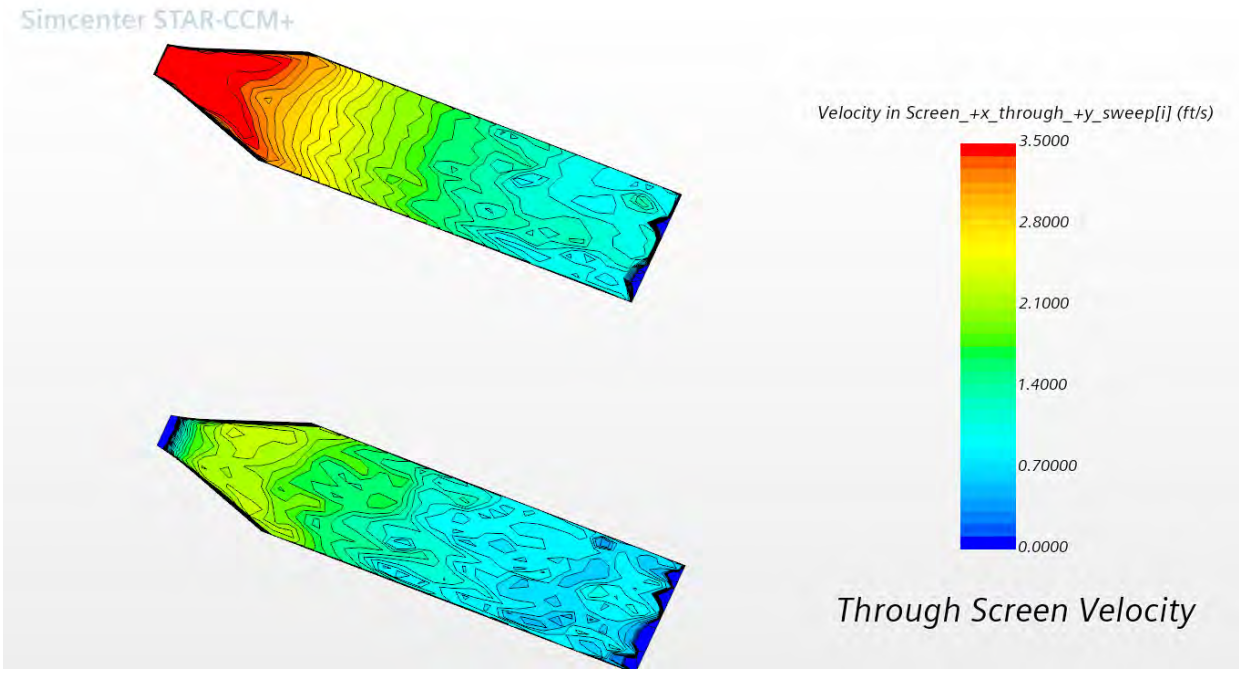

Figure 15 - Run 1 Through Screen Velocities (top screen – Horn 5, bottom screen- Horn 4)

Because the porosity plates were not included in the CFD model due to time constraints, the screens in the CFD model did not meet approach or sweeping velocity criteria outlined for the design. But, because the CFD results with no porosity plates matched well with the physical model results with no porosity plates, it was reasoned that it would be feasible to include the porosity plates in future modeling efforts to match the physical model results, and the design would be within acceptable approach and sweeping velocity criteria. Figure 16 and Figure 17 show the approach and sweeping flow results from the physical model, along with a red line for the applicable criteria. A few of the results showing sweeping flow were outside of criteria in the physical model (and labeled as such in the physical modeling report), indicating that additional modeling in the next phase of design will be needed.

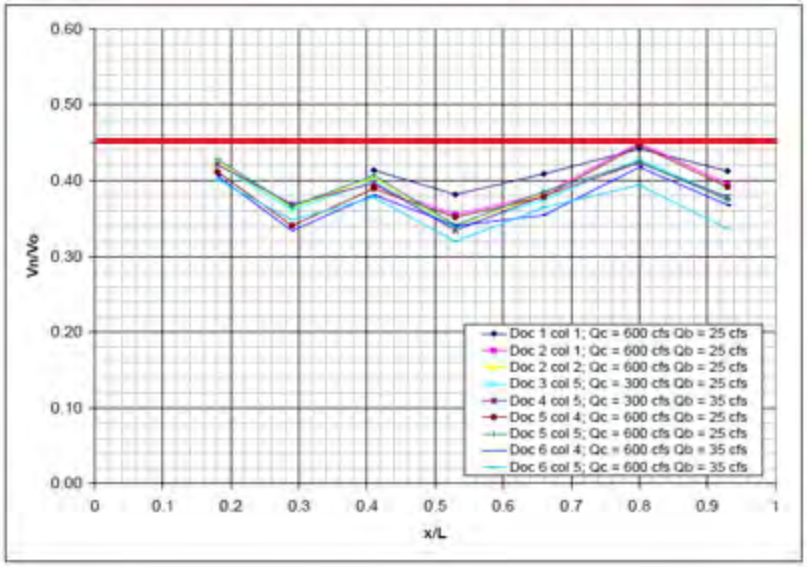

Figure 16 - Physical Model Ratio of Vn to Vo (screen normal to enclosure velocity)

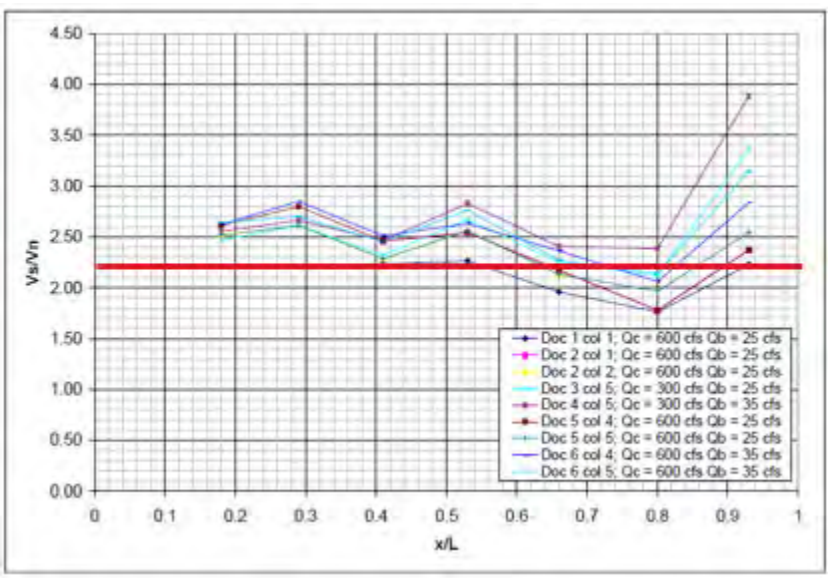

Figure 17 - Physical Model Ratio of Vs to Vn (sweeping flow to screen normal)

The pressure profile shown in Figure 18 did indicate a potential issue, with a large pressure change between the downstream end of the screens and the entrance to the SSB. There was not an initial design transition between the collector and the steep slope, and a very short transition was used to test its effects.

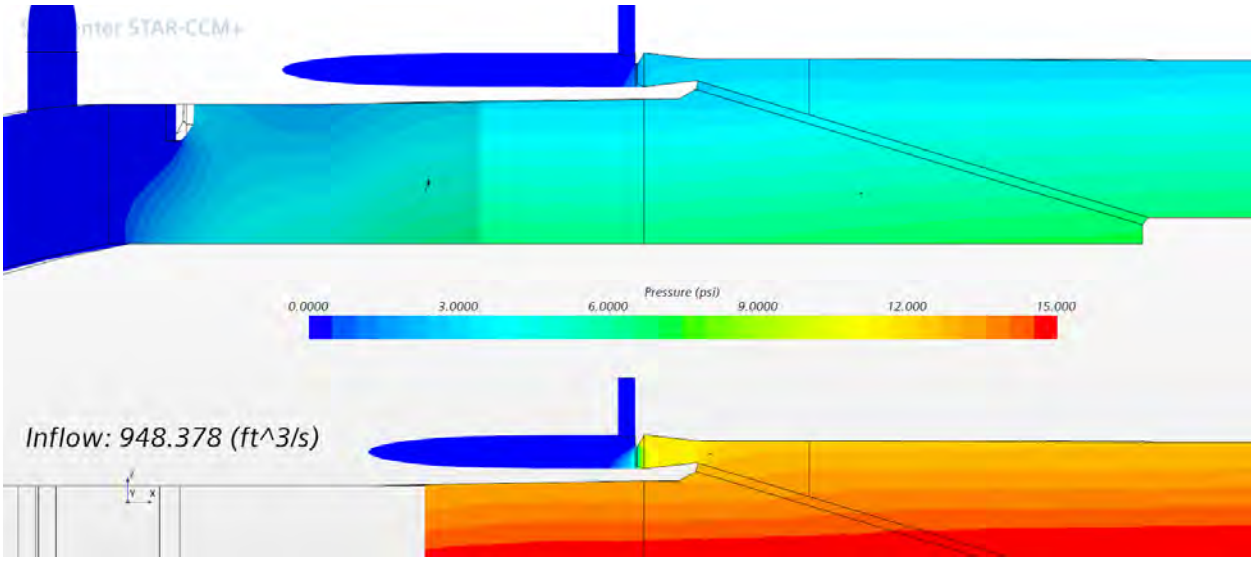

Figure 18 - Run 1 Pressure Profile (top conduit – Horn 5, bottom conduit- Horn 4)

A closer image of the bottom horn pressure is shown in Figure 19. The pressure change from Collector 4 to the SSB, through the 16-inch orifice, was shown as -13 psi. This was calculated on either end of the pressure differential, by multiply the pressure change by the average velocity through the transition and dividing by the distance between the pressure measurements. The transition length was 0.5-ft, and the flow velocity through that area was near 34 ft/sec. This corelates to a pressure change of -884 psi/sec, which exceeds the design criteria of maintaining pressure changes to more than -500 psi/sec (per the Project Design Criteria, Willamette Valley High-Head Bypass Design Parameters Report (2019)). This sort of pressure differential should be checked continuously through the transition to verify that the condition is met, and will be further analyzed in future design phases of the project utilizing probe particles.

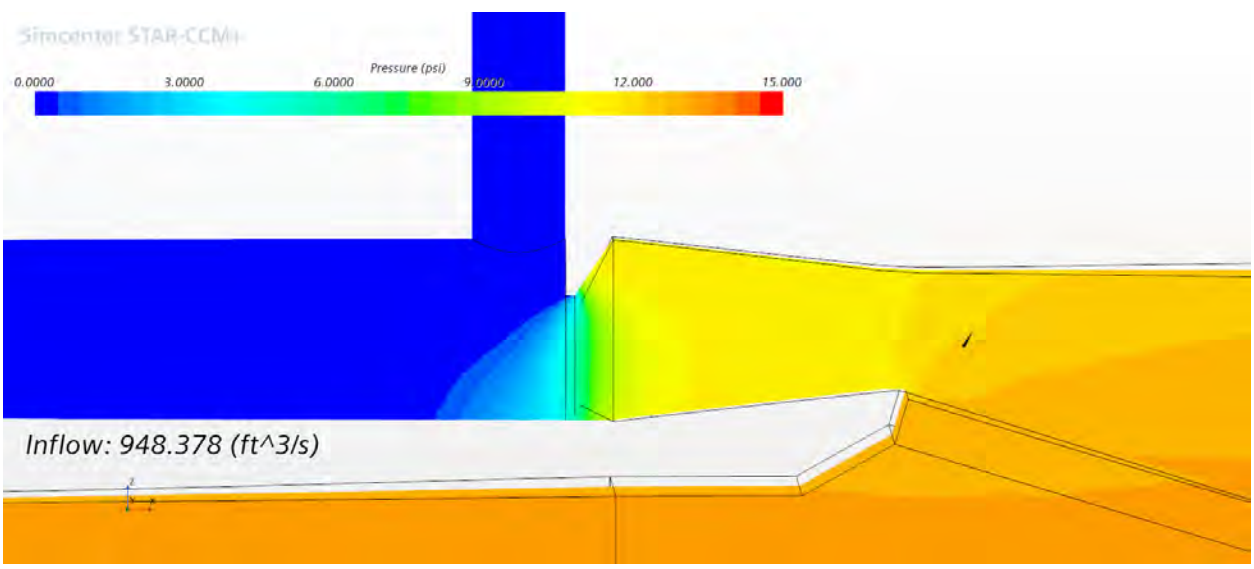

Figure 19 - Run 1 SSB 4 Pressure

To mitigate this fast pressure change, a new transition was drafted that starts further upstream. This transitions lofts between the rectangular conduit shape at the downstream end of the MIS screens, to a 16-inch pipe at the beginning of the SSB, with a length near 3.5 ft. Both the original and updated transitions are shown in Figure 20. All runs from this point on were completed using this new transition.

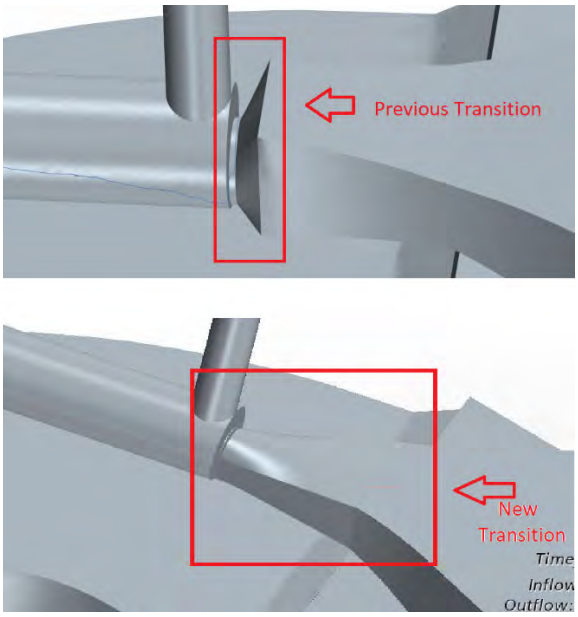

Figure 20 - Transition Change

Once the transition changes were made in the model, and the Cd values were calculated from the first run, the updated model was reran using new gate settings and called run 1b. The metrics output image from run 1b is shown in Figure 21. The flow through both the SSB and EB were much closer to the anticipated flowrates, with 616 cfs passing through the upper collector and 568 cfs passing through collector 4.

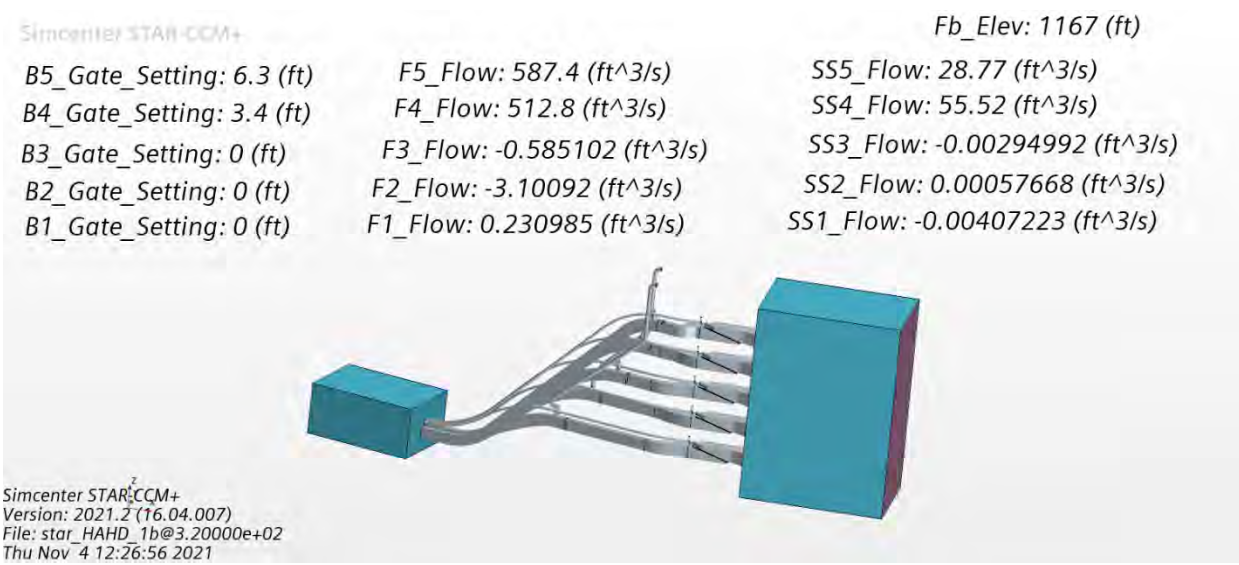

Figure 21 - Run 1b Metrics

The modified transition was much more hydraulically efficient, increasing the flow through the SSB pipes by an average of 6 cfs. The pressure profiles through the center cross section of model are shown in Figure 22, with a more focused output from collector 4 in Figure 23. The pressure in the lower collector SSB transitions from 11 psi to 0 psi, with an average velocity near 23 ft/sec. With a transition length of 3.5 ft, this corelates to a pressure change rate of -73 psi/sec, which is well within the outlined criteria of -500 psi/sec.

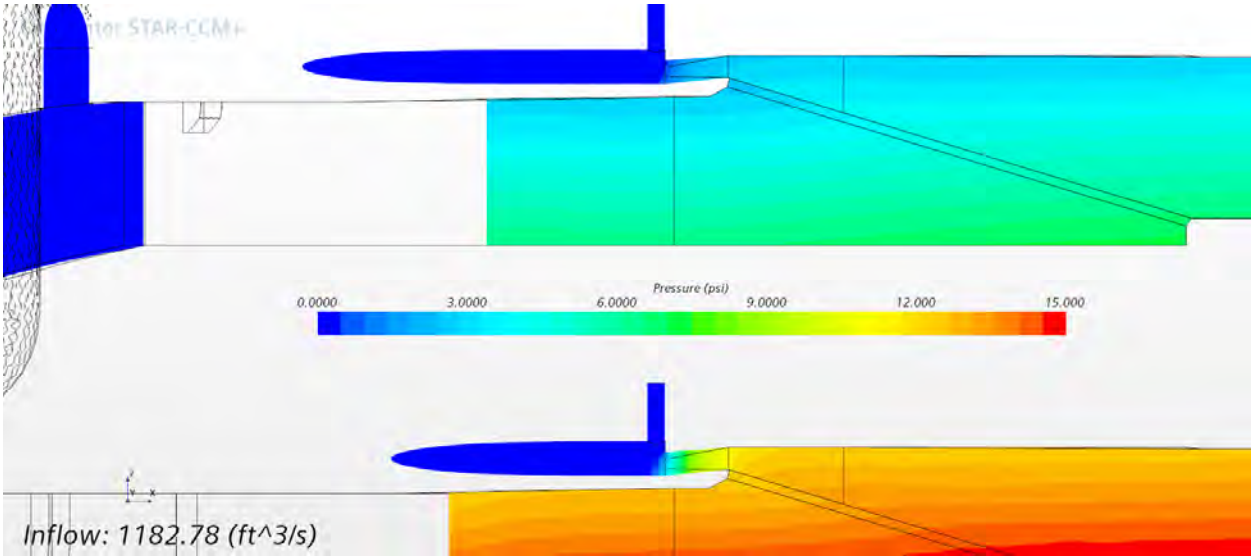

Figure 22 - Run 1b Pressure Profile (top conduit – Horn 5, bottom conduit- Horn 4)

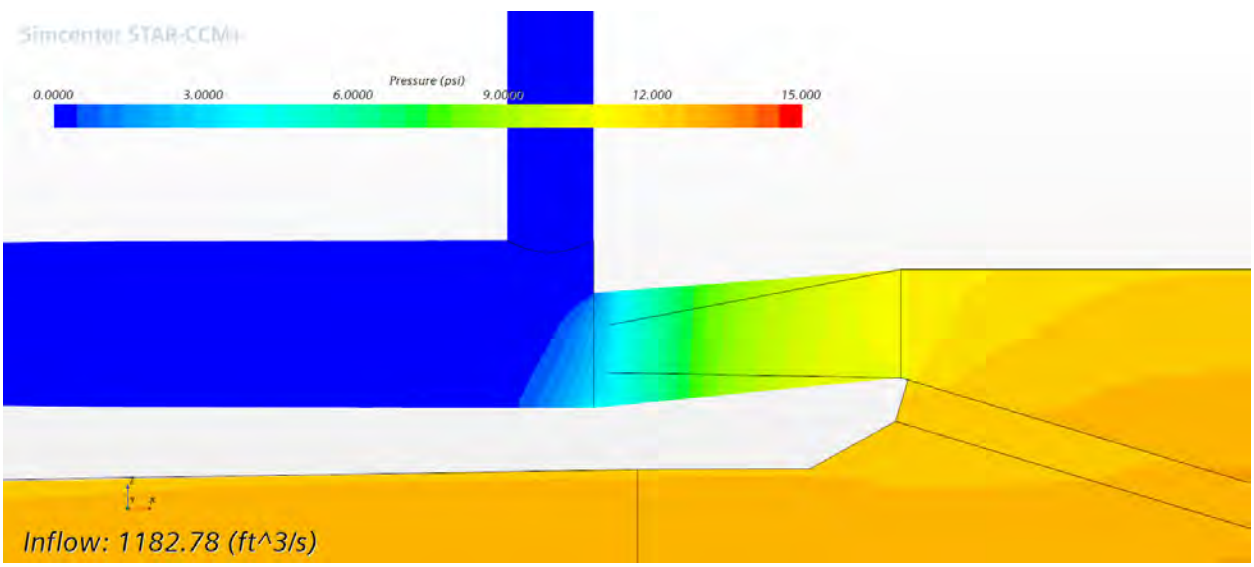

Figure 23 - Run 1b Collector 4 Pressure Profile

The final two runs were meant to look at a low flow split between two horns (run 3), and the worst-case SSB high-flow condition of transitioning to a lower collector when the forebay elevation drops below submergence criteria for the upper collector (run 7). The metrics output from run 3 is presented in Figure 24. Flow through the EB was similar for both collector 2 and 3, with near 290 cfs through each. As

the SSB pipes are not gate-controlled, the higher head on the lower collector pushes more flow through that pipe. Collector 3 passed 52 cfs, whereas collector 2 passed 70 cfs.

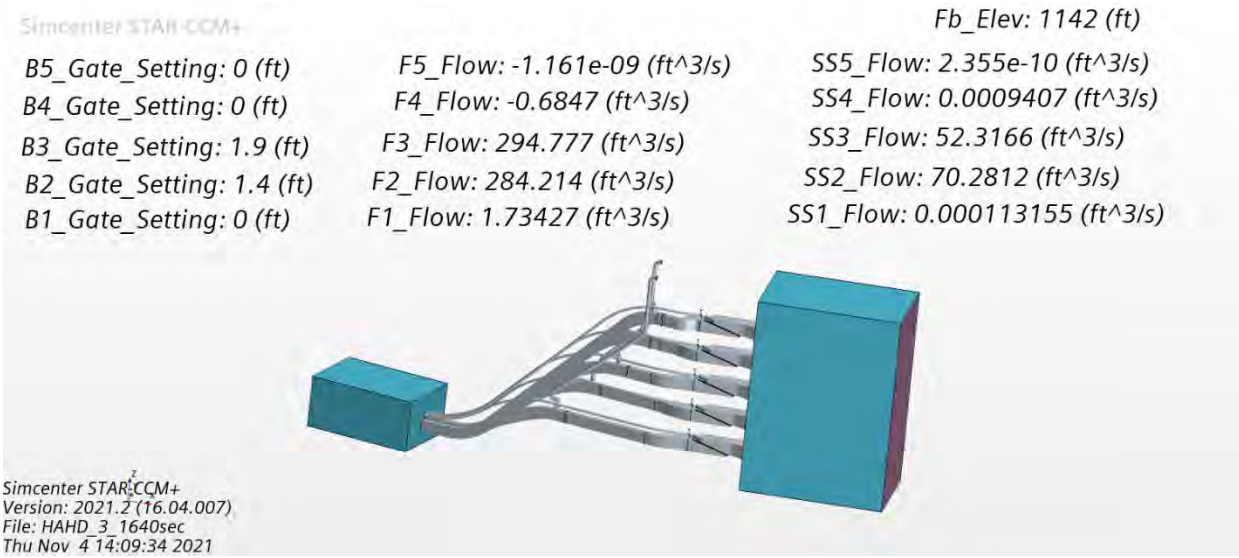

Figure 24 - Run 3 Metrics

Streamtraces (Figure 25) show a similar flow pattern distribution to run 1b, with lower velocities due to the smaller gate openings in the EB conduits.

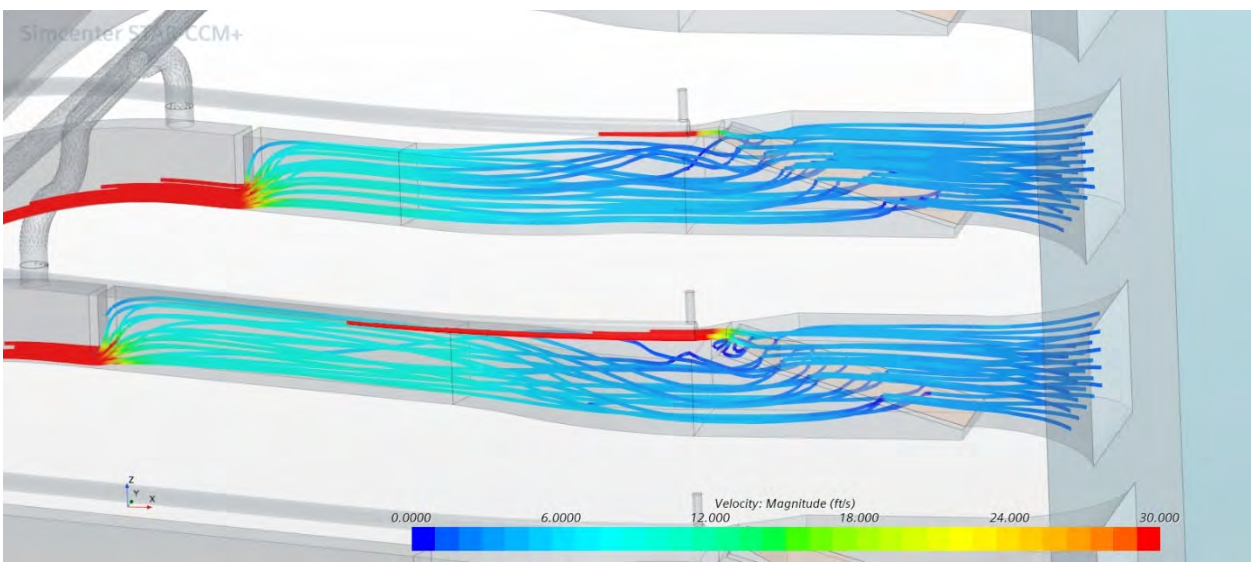

Figure 25 - Run 3 Streamlines (top conduit – Horn 3, bottom conduit- Horn 2)

Run 7 metrics output (Figure 26) shows what is considered the highest flowrate through the SSB, with high head on collector 3. The forebay elevation in this run was just below submergence criteria for collector 5, which is when a transition to collector 3 would need to be made. A maximum of 72 cfs was passed through the SSB pipe of collector 3.

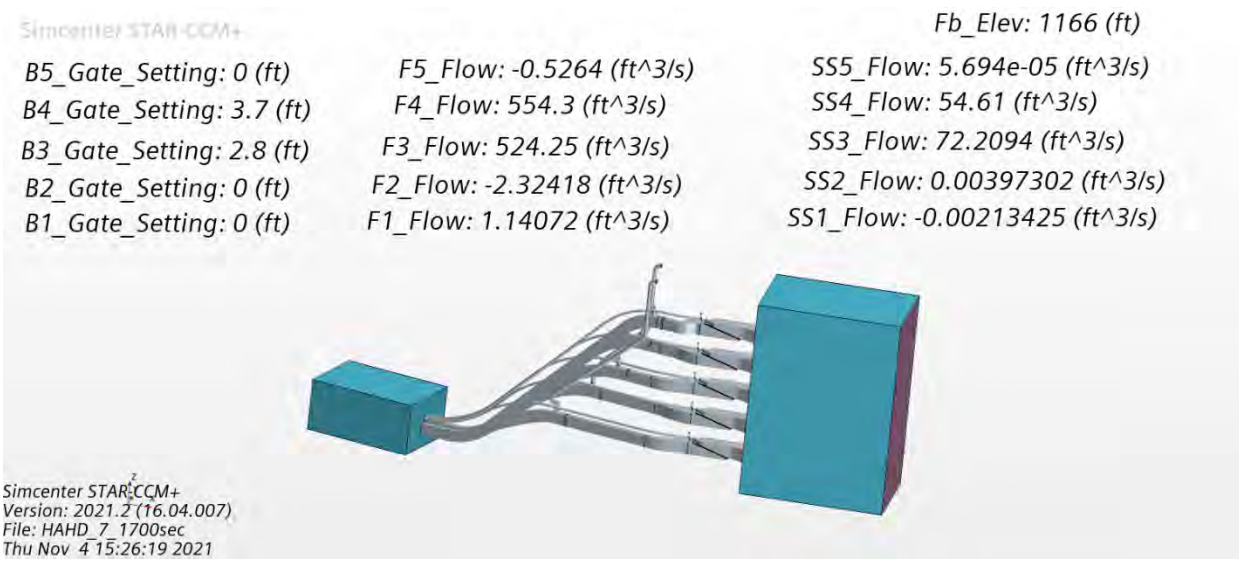

Figure 26 - Run 7 Metrics

Figure 27 is an output image focused on the pressure change in the transition portion of the collector 3 SSB. A pressure change of -20 psi occurred over the 3.5 ft length transition, with an average velocity of 27 ft/sec. This correlated to a pressure change rate of -154 psi/sec, which is still within criteria.

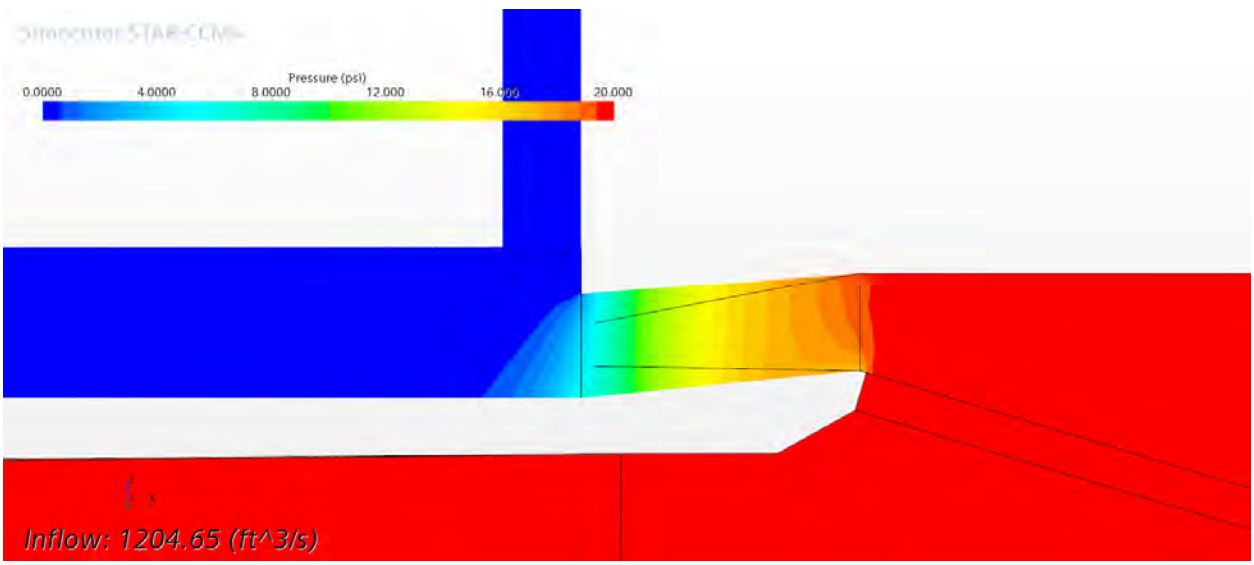

Figure 27 - Run 7 Pressure Profile Collector 3

All hydraulic data, including flowrates and Cd values calculated from output, are shown in Table 3 and Table 4. All additional output images for the four runs are presented at the end of this report.

Table 3 - Upstream CFD Output 1

Upstream CFD Output							Top Horn			Bottom Horn		
#	FB Elevation	Collector Flow	Top horn #	Bottom horn #	Top horn Flow	Bottom horn Flow	Fish Pipe Flow	Bypass Flow	Gate Setting	Fish Pipe Flow	Bypass Flow	Gate Setting
	(ft)	(cfs)	(#)	(#)	(cfs)	(cfs)	(cfs)	(cfs)	(ft)	(cfs)	(cfs)	(ft)
1	1167	955.0	5	4	565.8	389.2	24.6	541.2	5.9	47.3	341.9	2.1
1b	1167	1184.4	5	4	616.1	568.3	28.8	587.3	6.3	55.5	512.8	3.4
3	1142	701.5	3	2	347.0	354.5	52.4	294.6	1.9	70.3	284.2	1.4
7	1166	1205.1	4	3	608.7	596.4	54.6	554.1	3.7	72.2	524.2	2.8

Table 4 - Upstream CFD Output 2

	Cd (calc)				Driving Head			
#	Top SSB	Top EB	Bottom SSB	Bottom EB	Top SSB	Top EB	Bottom SSB	Bottom EB
					ft	ft	ft	ft
1	0.77	0.73	0.77	0.81	8.15	15.3	30.15	39.2
1b	0.90	0.75	0.90	0.76	8.15	15.1	30.15	38.55
3	0.90	0.80	0.90	0.83	27.15	36.3	49.15	58.55
7	0.90	0.76	0.90	0.75	29.15	37.4	51.15	59.85

Discussion

The Upstream CFD modeling showed that the overall approach velocity and through-screen hydraulics were similar to those found in the 2011 AECOM physical modeling study. Because of this similarity, it shows that the collector will operate similar to the original design on the upstream end and stay within the design criteria presented in the 2009 DDR.

When the initial transition was tested, which acted as the connection between the existing 95% DDR collector design and the steep slope bypass additions, it showed that the pressure change was too abrupt. By lengthening that transition, the pressure change rate fell back within the -500 psi/sec criteria, even under the highest anticipated flowrate condition. The highest observed flowrate for the SSB section was 72 cfs, and the calculated Cd values for the SSB sections was 0.90 for all runs (with the new transition). This discharge coefficient considers all losses from outside the collector horn entrance, to the 24” pipe. Cd values for the EB gates ranged from 0.75 to 0.83, depending on driving head and gate opening for each run.

Overall, the upstream region of the collector met the intended design criteria and should provide safe fish passage through the system. Cd values and flowrates from the upstream CFD modeling was used to inform the upstream boundary conditions of the Flow3D modeling.

Model 2: Steep Slope

Model Overview

Grid Development

The grids for the CFD model runs were created in Flow-3D version 12.0.2. The development of the model grid was based on professional judgment and requires validation during future design efforts once initiated. The cartesian mesh used in this effort is 1/8th of a foot in all directions. Initial model runs were evaluated using ¼ ft mesh resulting in similar hydraulic characteristics down the steep slope. Multiple configurations and operations were evaluated using the lower density mesh to determine initial sizing and behavior of flow with model restarts using 1/8th ft higher density mesh for modeling results with favorable hydraulic conditions. The final configuration presented used a 1/8th mesh to better demonstrate rooster tail development and surface irregulates that were not captured as well within the lower density mesh.

Boundary Conditions

A flow boundary was assigned at the intake of the conduits. For the primary bypass evaluation two operations were evaluated. The first operation assumed 25 cfs from horn 5 and while the second operation assumed 38 cfs from horn 5 and 58 cfs from horn 4. These discharges were derived using the discharge coefficients developed from Star-CM modeling results. For the full flow bypass evaluation 600 cfs was assigned at the upstream boundary condition and a gate geometry replicating a 5' opening was incorporated. All upstream boundaries were provided a velocity vector parallel to the associate conduits. Downstream conditions assumed an outflow boundary and a pressure boundary using zero fluid fraction represented areas for venting.

Model Validation

To be evaluated under future design efforts.

Metrics

Evaluation of the flow environment was conducted by releasing five mass particles near the upstream boundary with density and diameters equivalent to sensor fish. Each particle was tracked as it passed down the steep slope for the two configurations. Instantaneous strain and pressure values were recorded at 0.001 second intervals as the particle passed through the unsteady simulation at time (t_i). Instantaneous strain values are directly compared to threshold values while absolute pressure change was calculated as:

$$ABS(P_i-P_{i-1})/(t_i-t_{i-1})$$

Where: P_x =Instantaneous Pressure at time of t_x

Results

The first configuration evaluated was the primary bypass with horn 5 operating at lowest anticipated discharge of 25 cfs. The resulting flow exits the 16" orifice into the 16" flume then traverses down the steep slope. The figure below represents the general configuration of the steep slope and depicts the fluid surface associated with this operation color coded by the velocity magnitude in feet per second.

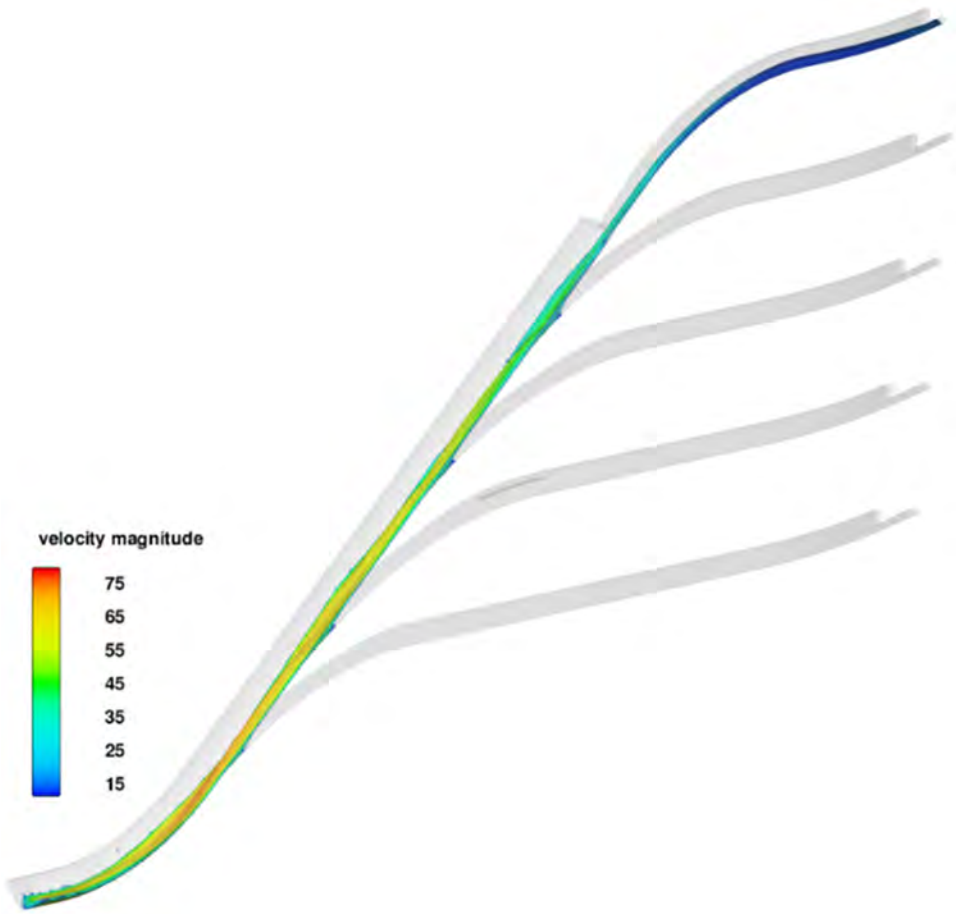

Flow decelerates to 16 fps prior to entering the steep slope section of the primary bypass, then accelerates to velocities in the mid 60's before decelerating through the bottom vertical curve transitioning to the deceleration tunnel. Flow is expected to be traveling at a rate of 55 fps and a depth of 1.5 feet when entering the deceleration tunnel.

Particles were placed near the upstream boundary at locations representing the center, top, bottom, left and right sections of the flow field within the 16" orifice. Each particle was tracked as it passed down the steep slope. The resulting strain and pressure changes were recorded at 0.001 second intervals and are depicted in the two following charts. The hydraulic environment under this configuration and operation indicates maximum strain values of 80 cm/s/cm are near 16% of the threshold value of 500 (cm/s/cm) while maximum recorded absolute pressure change of 27 psi/s is at 5.5% of the threshold of -500 (psi/s). The maximum absolute pressure change at an approximate distance of 75 feet represents a particle meeting the surface of the bypass and deflecting back towards the center of flow.

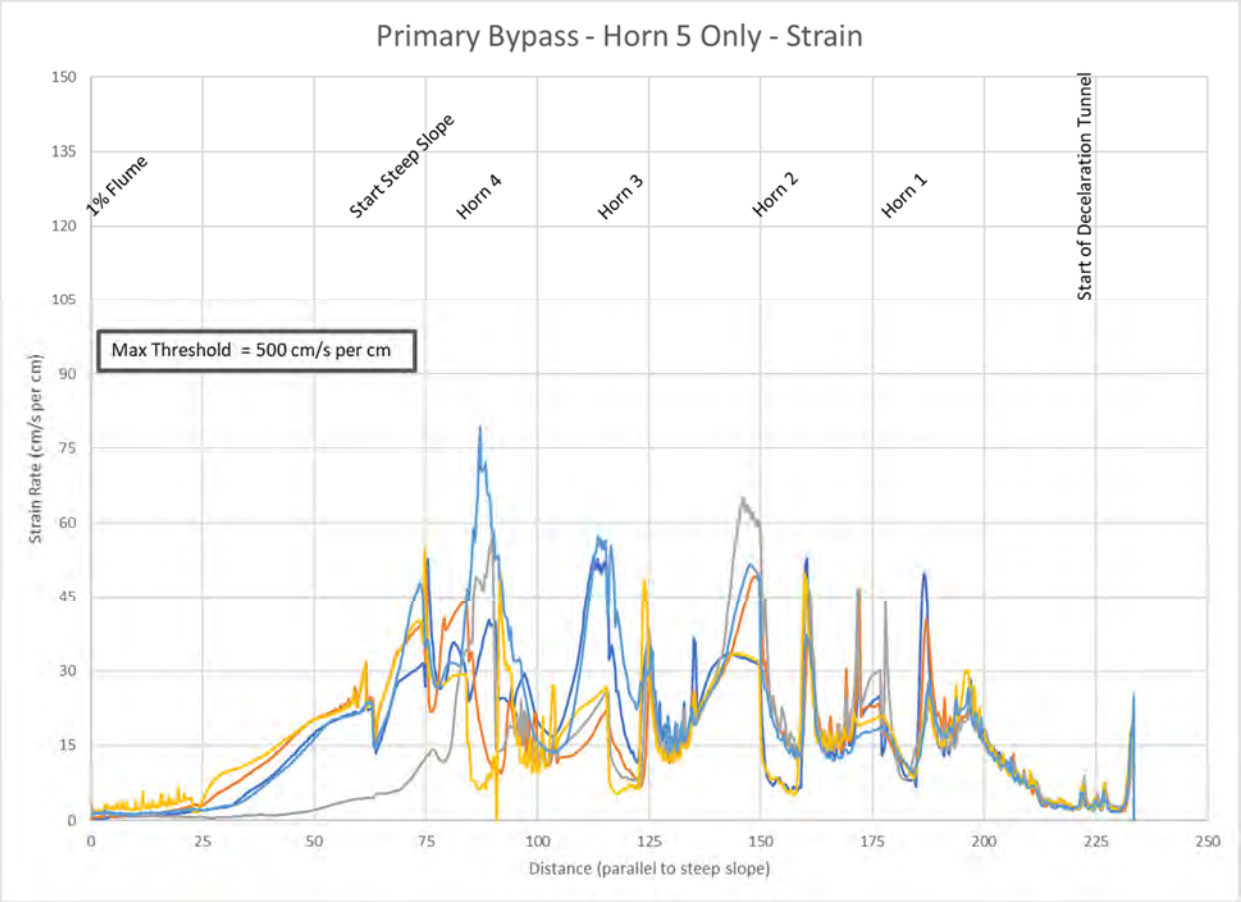
Primary Bypass - Horn 5 Only - Strain
1% Flume
Start Steep Slope
Horn 4
Horn 3
Horn 2
Horn 1
Start of Decelaration Tunnel
Max Threshold = 500 cm/s per cm
Strain Rate (cm/s per cm)
Distance (parallel to steep slope)
0
15
30
45
60
75
90
105
120
135
150
0
25
50
75
100
125
150
175
200
225
250

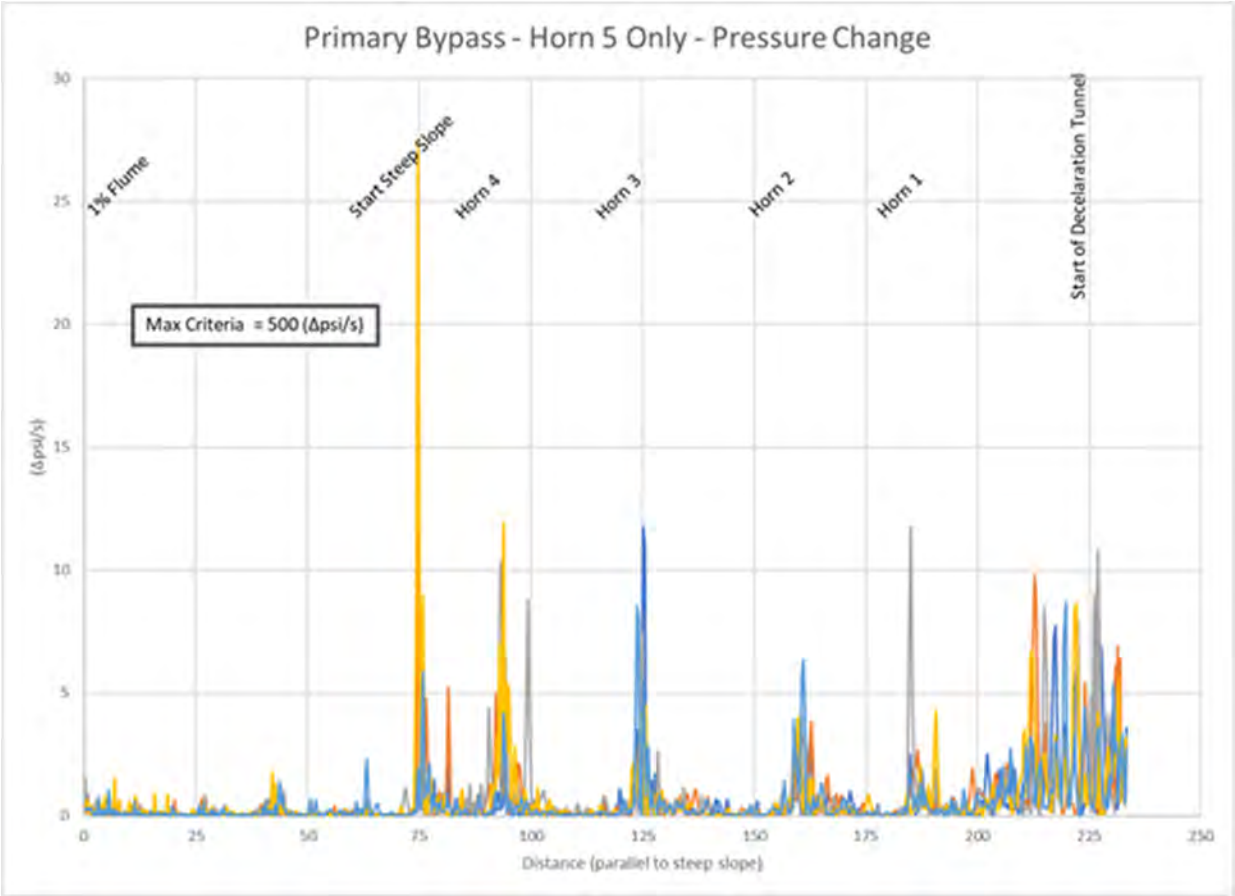

The second configuration evaluated was the primary bypass with horn 5 and horn 4 operating at highest anticipated discharge of 38 and 58 cfs respectively. The resulting flow from the two horns intersects at an elevation between horn 3 and 4 orifice elevations. The figure below represents the general configuration of the steep slope and depicts the fluid surface associated with this operation color coded by the velocity magnitude in feet per second.

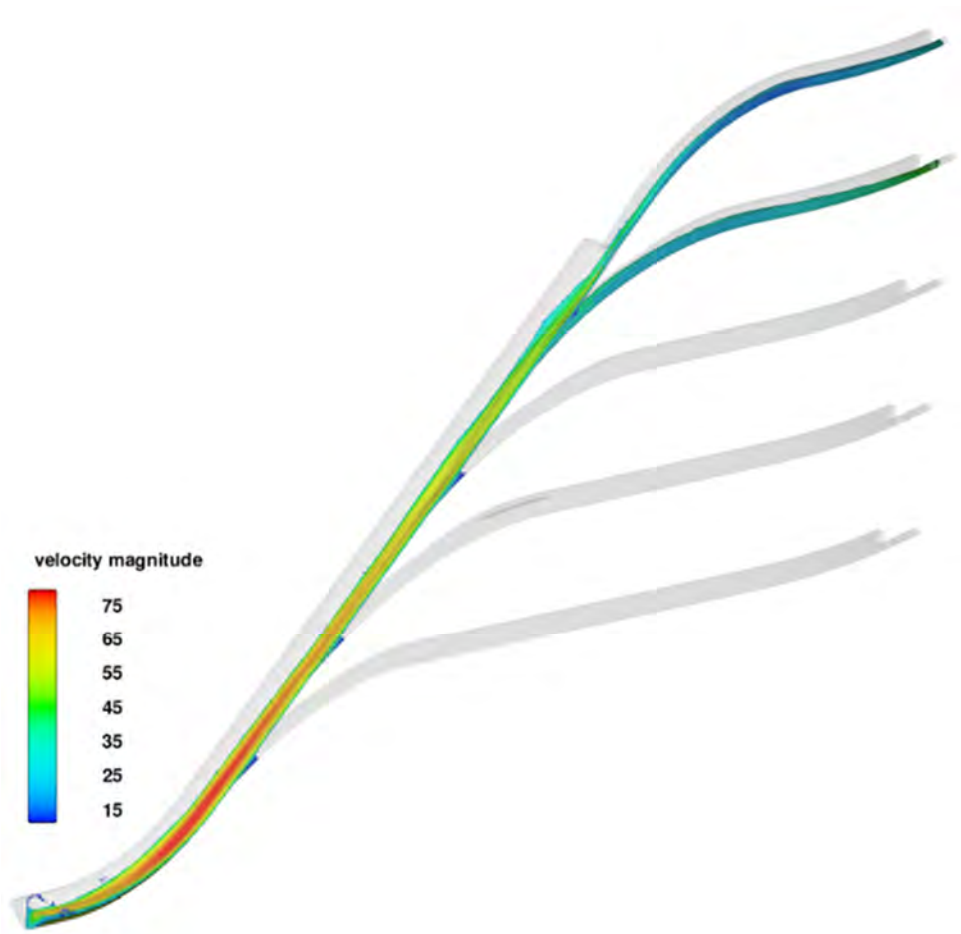

Flow decelerates to 23 fps and 35 fps for horn 5 and 4 respectively prior to entering the steep slope section of the primary bypass, then accelerates to velocities in the high 60's before decelerating through the bottom vertical curve transitioning to the deceleration tunnel. Flow is expected to be traveling at a rate of 62 fps and a depth of 2.25 feet when entering the deceleration tunnel.

Particles were placed as in the previous operation with the addition of particles near the upstream boundary in horn 4. Each particle was tracked as it passed down the steep slope. The resulting strain and pressure changes were recorded at 0.001 second intervals and are depicted in the four following charts based on particle release location. The hydraulic environment under this configuration and operation indicates strain values 109 cm/s/cm near 22% of the threshold value of 500 (cm/s/cm)) while maximum recorded absolute pressure change of 20 psi/s is at 4% of the threshold of -500 (psi/s).

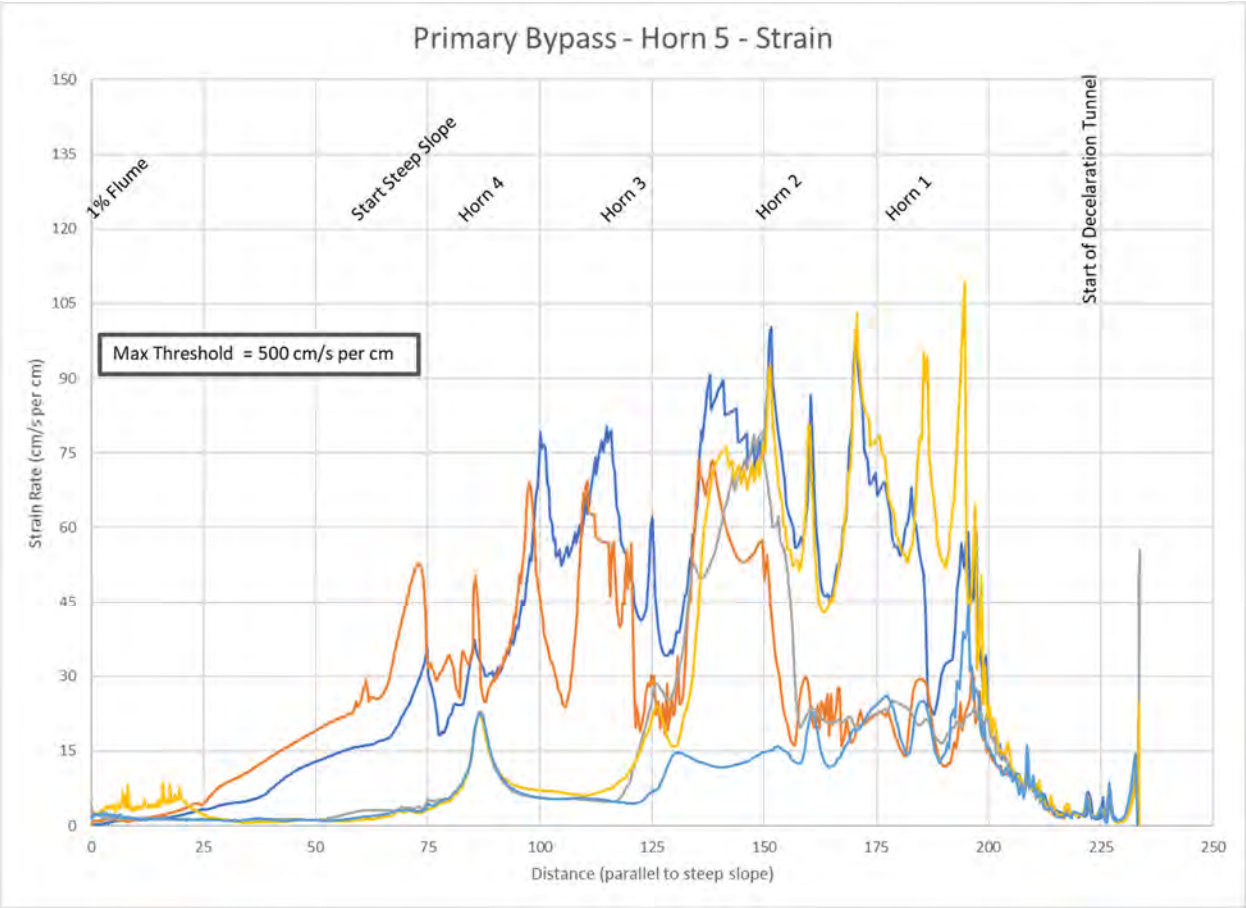
Primary Bypass - Horn 5 - Strain
1% Flume
Start Steep Slope
Horn 4
Horn 3
Horn 2
Horn 1
Start of Decelaration Tunnel
Max Threshold = 500 cm/s per cm
Strain Rate (cm/s per cm)
Distance (parallel to steep slope)
0
15
30
45
60
75
90
105
120
135
150
0
25
50
75
100
125
150
175
200
225
250

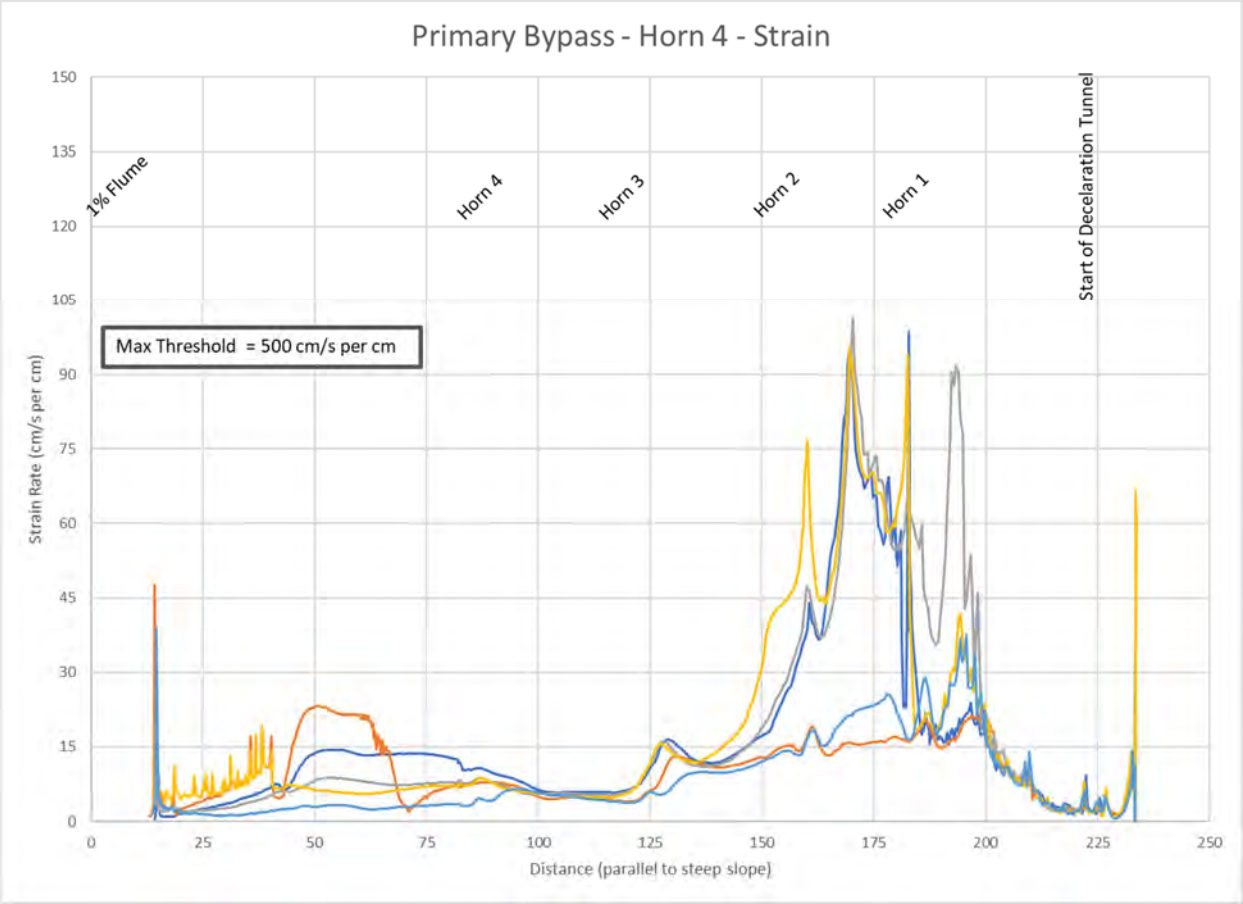
Primary Bypass - Horn 4 - Strain
1% Flume
Horn 4
Horn 3
Horn 2
Horn 1
Start of Decelaration Tunnel
Max Threshold = 500 cm/s per cm
Strain Rate (cm/s per cm)
Distance (parallel to steep slope)
0
15
30
45
60
75
90
105
120
135
150
0
25
50
75
100
125
150
175
200
225
250

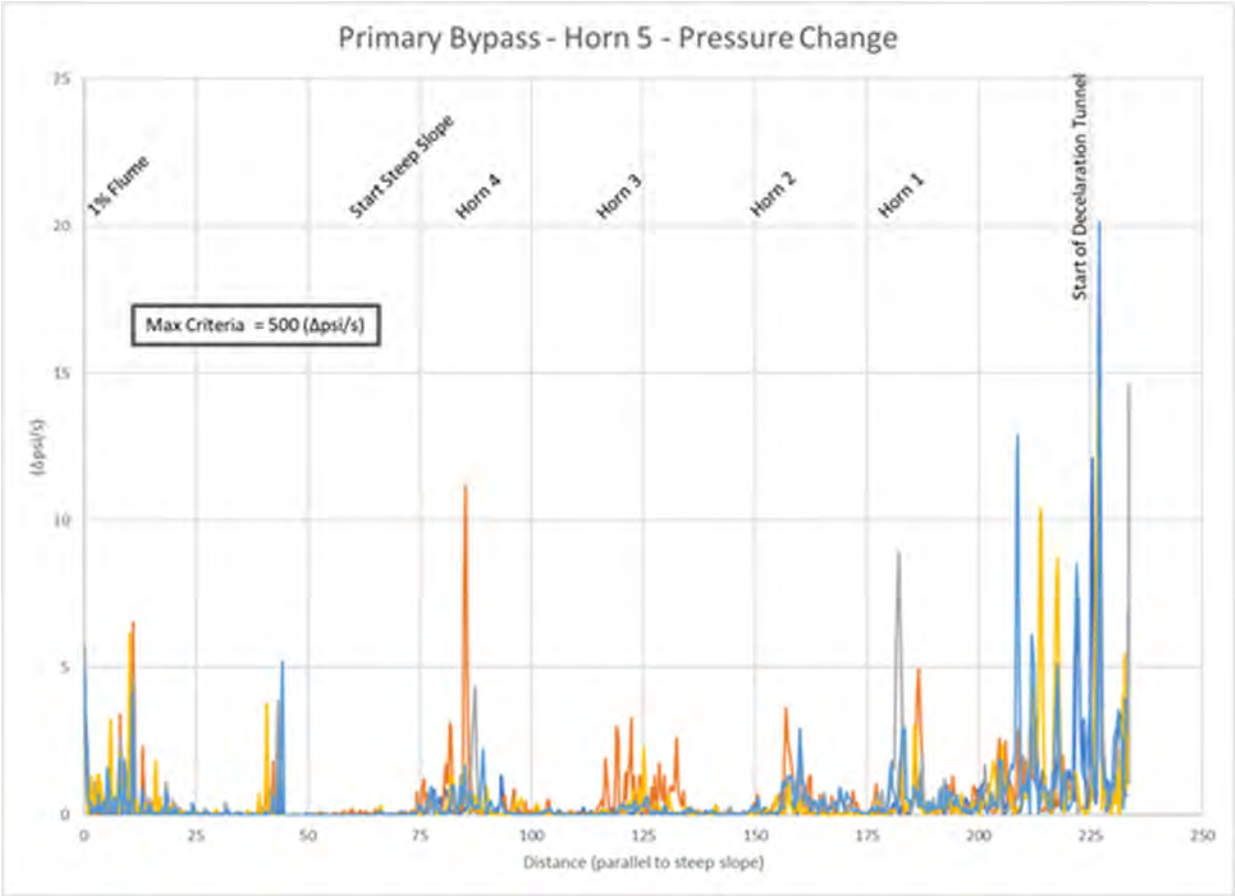
Primary Bypass - Horn 5 - Pressure Change
1% Flume
Start Steep Slope
Horn 4
Horn 3
Horn 2
Horn 1
Start of Decelaration Tunnel
Max Criteria = 500 (Δpsi/s)
(Δpsi/s)
0
5
10
15
20
25
0
25
50
75
100
125
150
175
200
225
250
Distance (parallel to steep slope)

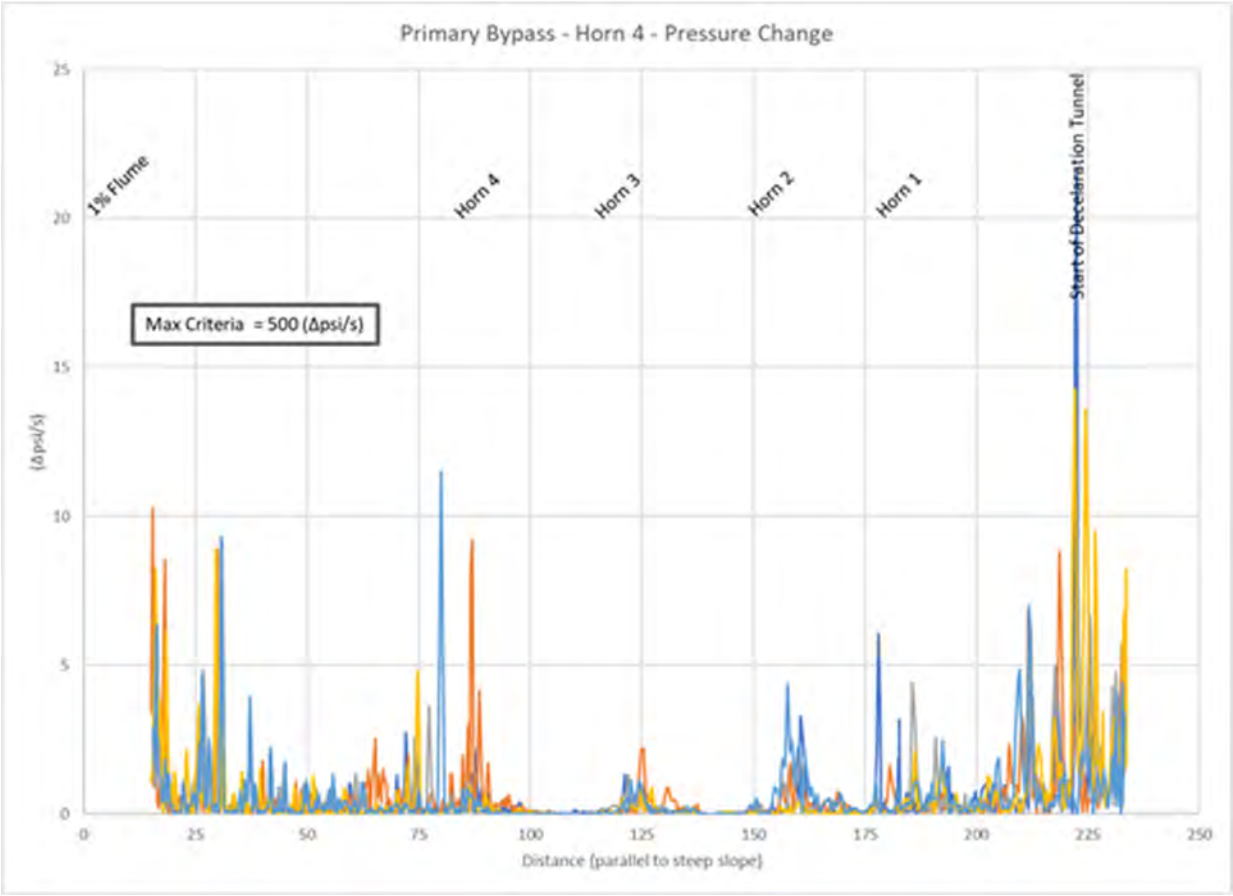

The third configuration evaluated was the full flow bypass with horn 5 operating at maximum anticipated discharge of 600 cfs with maximum gate opening. The resulting flow exits the gate at 30 fps and accelerates through the vena contracta to a velocity of 39 fps then traverses down the steep slope. The figure below represents the general configuration of the steep slope and depicts the fluid surface associated with this operation color coded by the velocity magnitude in feet per second.

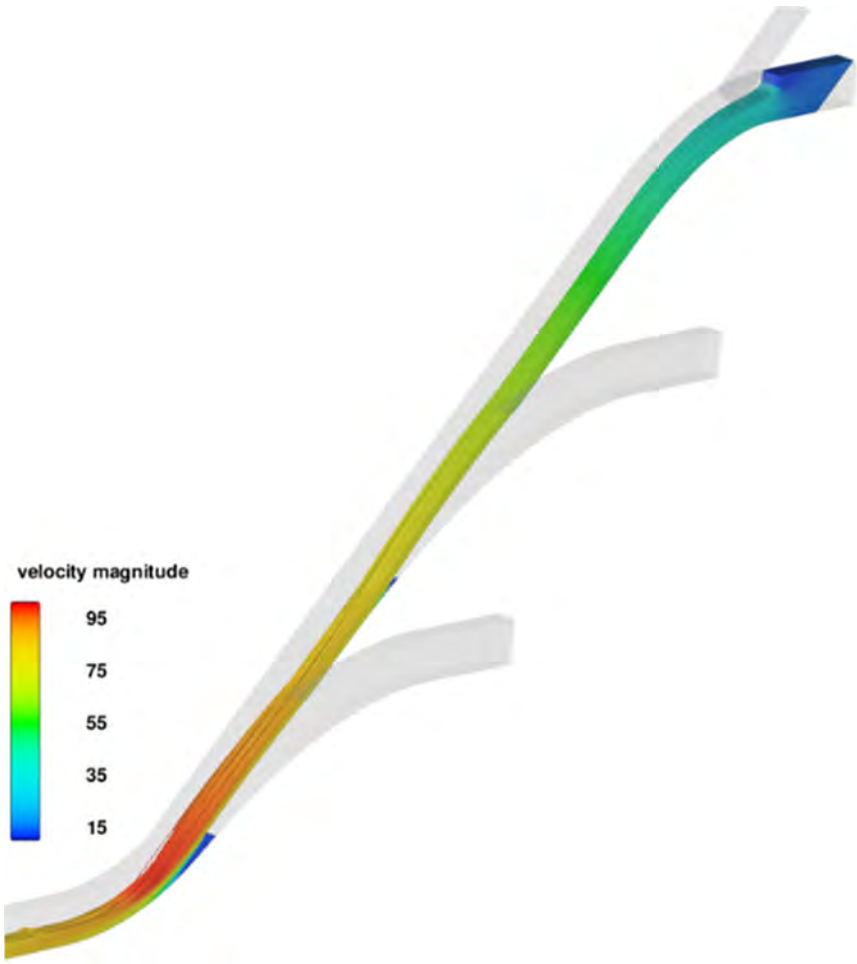

Flow accelerates to velocities in the low 90's before decelerating through the bottom vertical curve transitioning to the deceleration tunnel. Flow is expected to be traveling at a rate of 84 fps and a depth of 2.5 feet when entering the deceleration tunnel.

Particles were placed near the upstream boundary at locations representing the center, top left, top right bottom left, and bottom right sections of the flow field within the 4'X8' intake. Each particle was tracked as it passed down the steep slope. The resulting strain and pressure changes were recorded at 0.001 second intervals and are depicted in the two following charts. The hydraulic environment under this configuration and operation indicates strain values 15 cm/s/cm are near 3% of the threshold value of 500 (cm/s/cm) while maximum recorded absolute pressure change of 157 psi/s is near 31% of the threshold of -500 (psi/s).

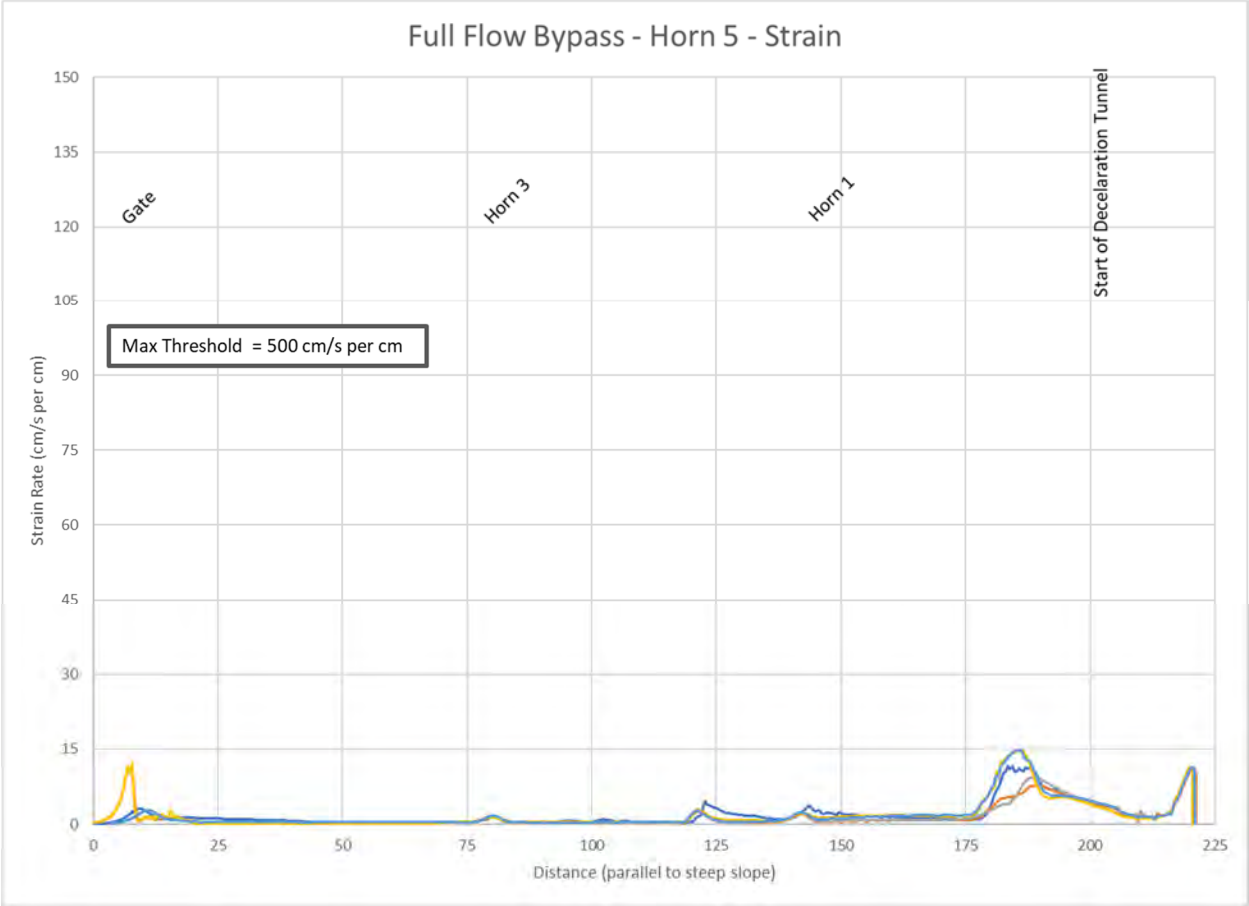
Full Flow Bypass - Horn 5 - Strain
Gate
Horn 3
Horn 1
Start of Decelaration Tunnel
Max Threshold = 500 cm/s per cm
Strain Rate (cm/s per cm)
Distance (parallel to steep slope)
150
135
120
105
90
75
60
45
30
15
0
0
25
50
75
100
125
150
175
200
225

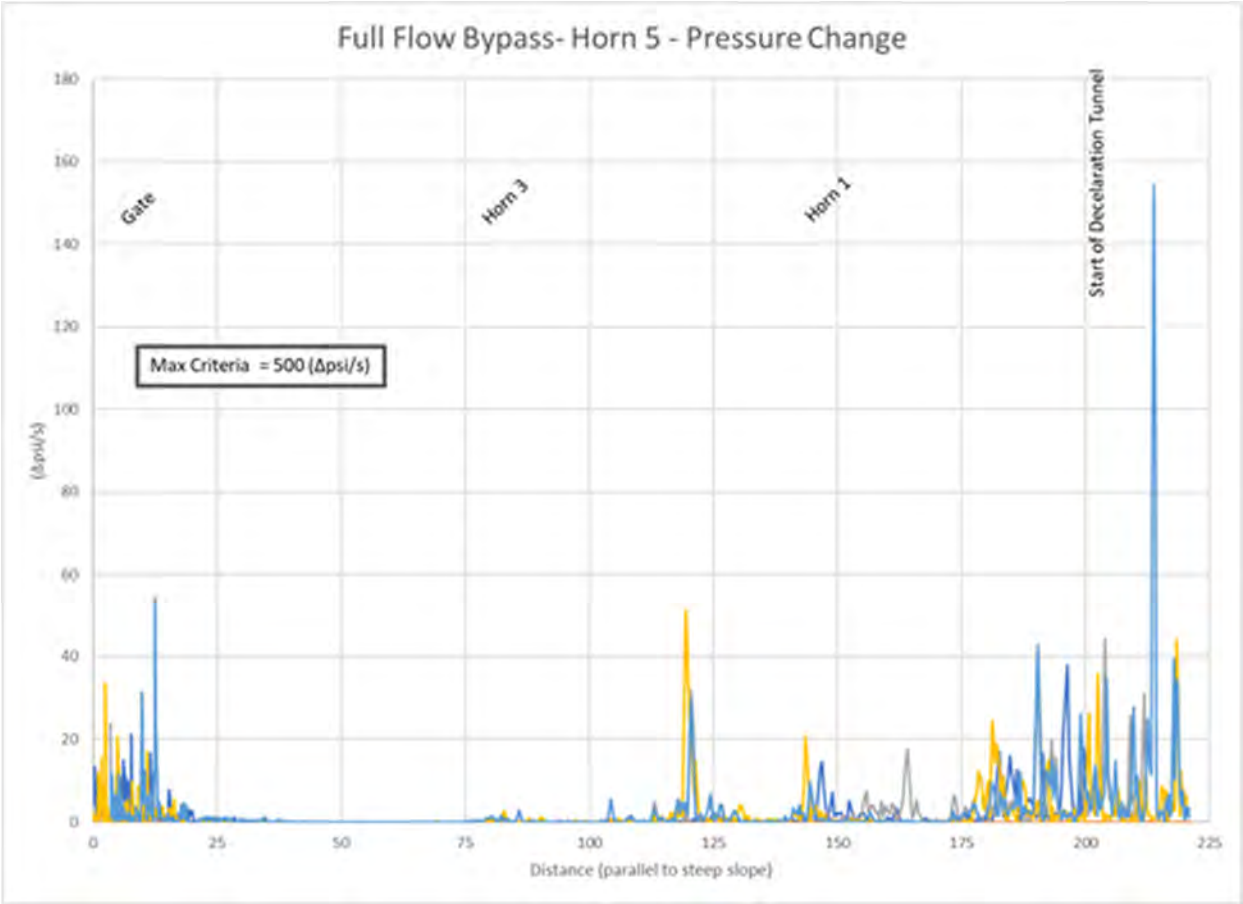

Discussion

Future design efforts should consider modification of upstream boundary condition to be pressure based and expanded to include geometry downstream of screen. Existing model oversimplifies incoming flow condition by assuming parallel flow vectors which may influence hydraulic environment within the steep slope section of the bypass. Modeling efforts will also need to include grid validation efforts to ensure results are not being significantly influenced by the mesh size.

Flow velocities predicted with the CFD model correspond to velocities estimated with 1D modeling. The resulting free surfaces associated with flow bulking and air entrainment indicate the conveyance of water and air without becoming overly full during maximum discharges with operations anticipated to create the highest level of air entrainment. Future design efforts will need to vary effective roughness and expand operations to evaluate other horn operations under various head conditions.

The hydraulic environment within the steep slope section of the primary and full flow bypasses appears to maintain conditions below thresholds. The recorded strain rates at 16% to 22% of threshold within the primary bypass should not cause fish injury; however future design efforts need to expand the particle release evaluation beyond this preliminary evaluation using only 5 particle per release. Future design efforts can focus on reducing the distance of free fall within the primary bypass at horn intersections and investigate alignment offsets to further reduce strain values if desired. Full flow bypass values for pressure change are currently predicted at 31% of threshold can also be investigated similarly with modification to the vertical curve radius at the base of the full flow bypass.

Output Images –

Upstream Region

Run 1

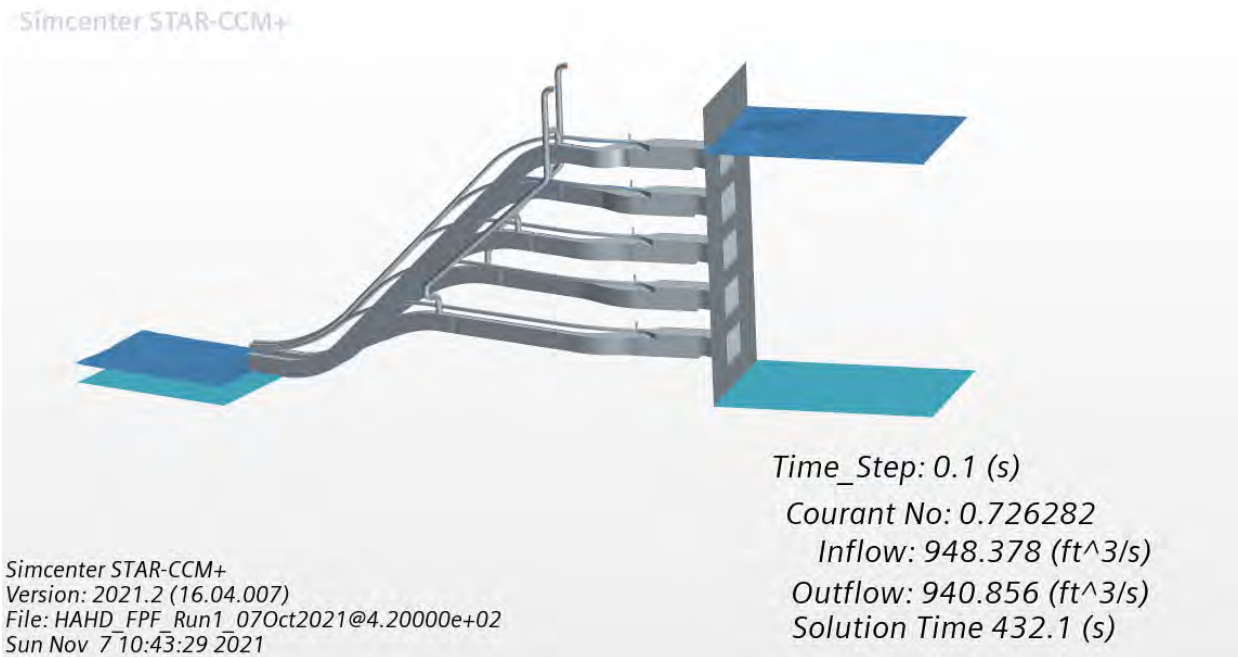

Run 1b

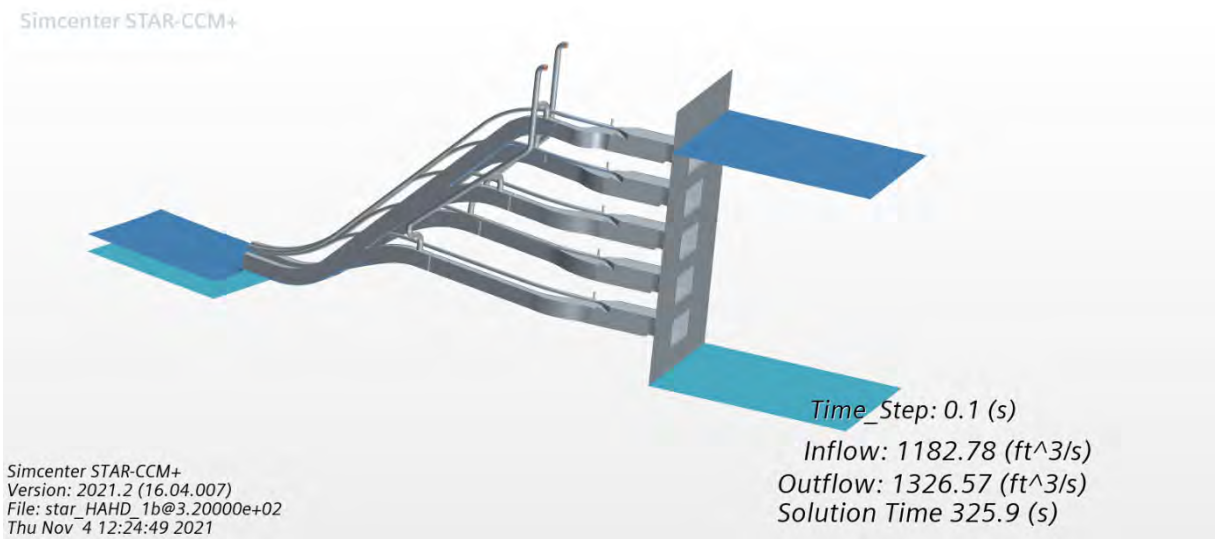
Simcenter STAR-CCM+
Time_Step: 0.1 (s)
Inflow: 1182.78 (ft^3/s)
Outflow: 1326.57 (ft^3/s)
Solution Time 325.9 (s)
Simcenter STAR-CCM+
Version: 2021.2 (16.04.007)
File: star_HAHD_1b@3.20000e+02
Thu Nov 4 12:24:49 2021

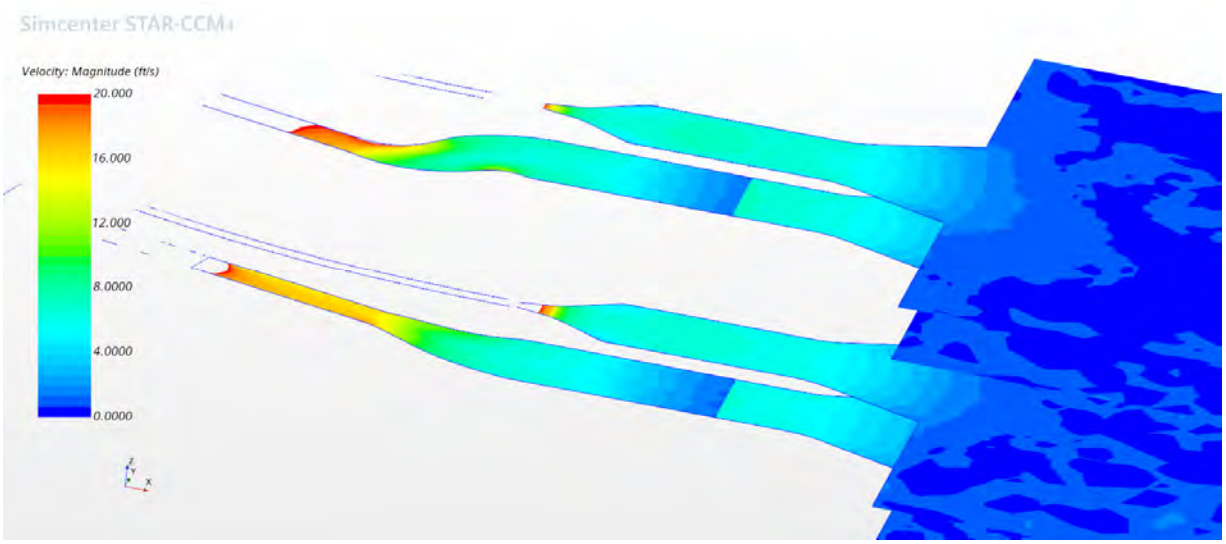
Simcenter STAR-CCM+
Velocity: Magnitude (ft/s)
20.000
16.000
12.000
8.0000
4.0000
0.0000

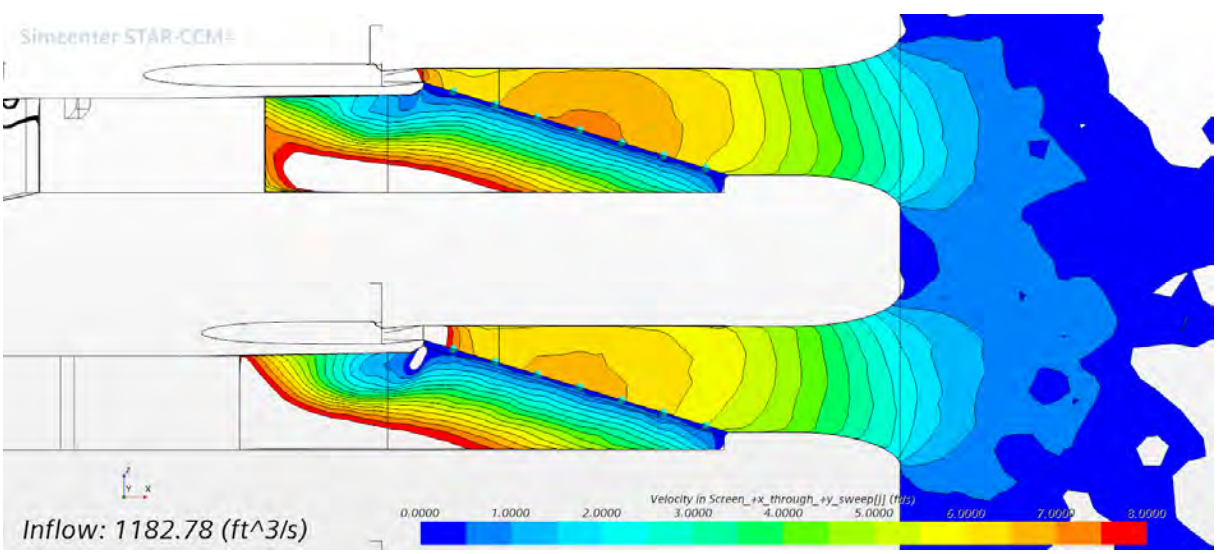
Simcenter STAR-CCM+
Inflow: 1182.78 (ft^3/s)
Velocity in Screen_+x_through_+y_sweep[j] (ft/s)
0.0000
1.0000
2.0000
3.0000
4.0000
5.0000
6.0000
7.0000
8.0000

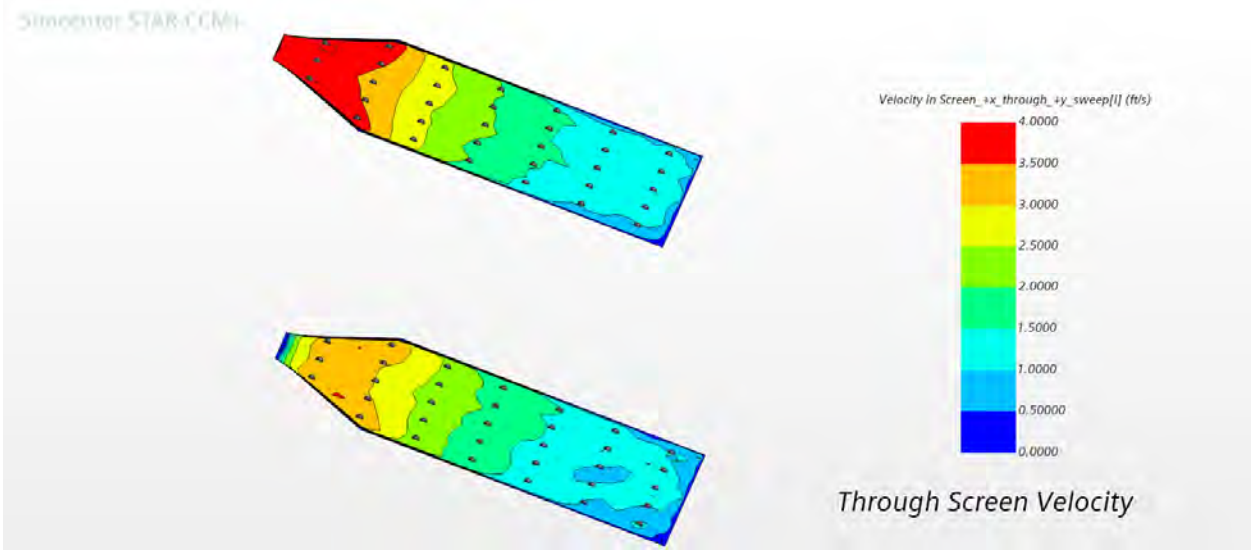
Simcenter STAR-CCM+
Velocity in Screen_+x_through_+y_sweep[i] (ft/s)
4.0000
3.5000
3.0000
2.5000
2.0000
1.5000
1.0000
0.50000
0.0000
Through Screen Velocity

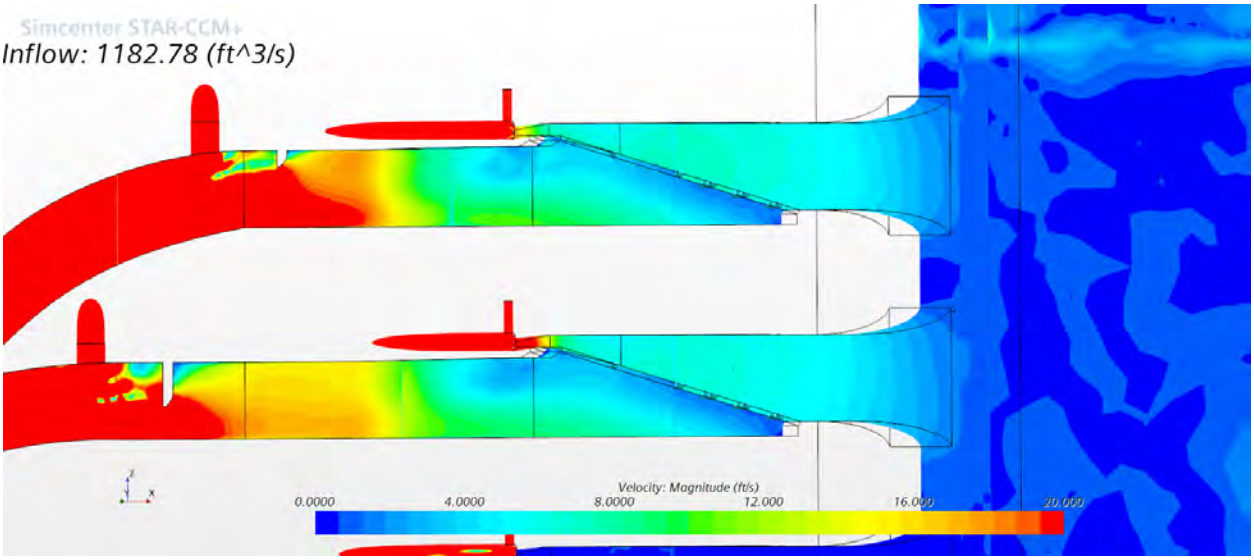
Simcenter STAR-CCM+
Inflow: 1182.78 (ft^3/s)
Velocity: Magnitude (ft/s)
0.0000
4.0000
8.0000
12.000
16.000
20.000

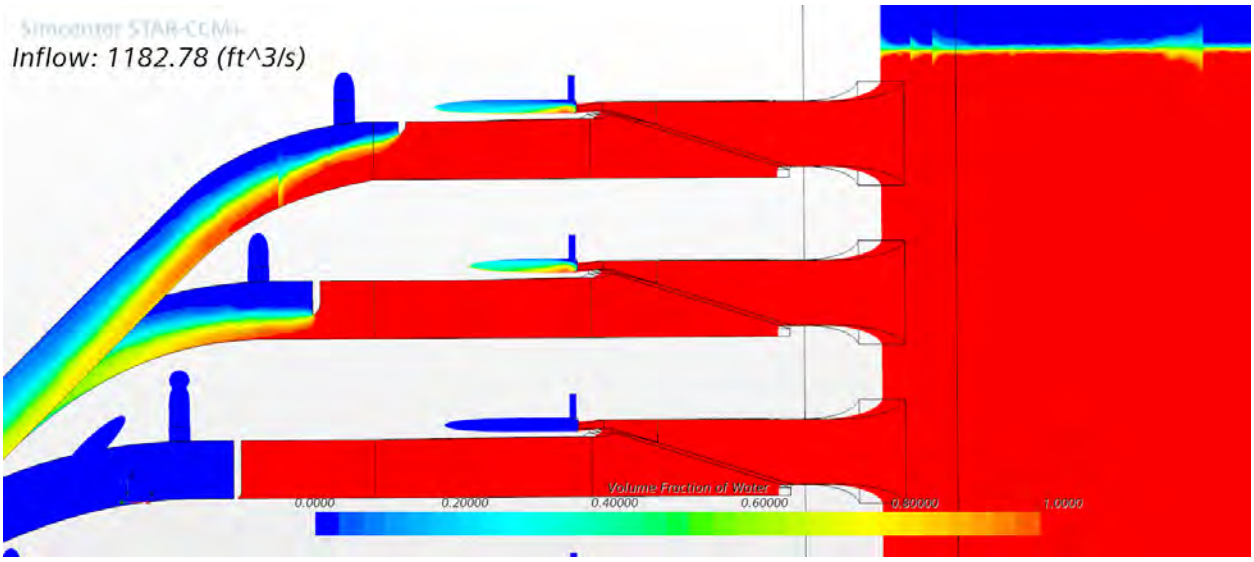
Simcenter STAR-CCM+
Inflow: 1182.78 (ft^3/s)
Volume Fraction of Water
0.0000
0.20000
0.40000
0.60000
0.80000
1.0000

Run 3

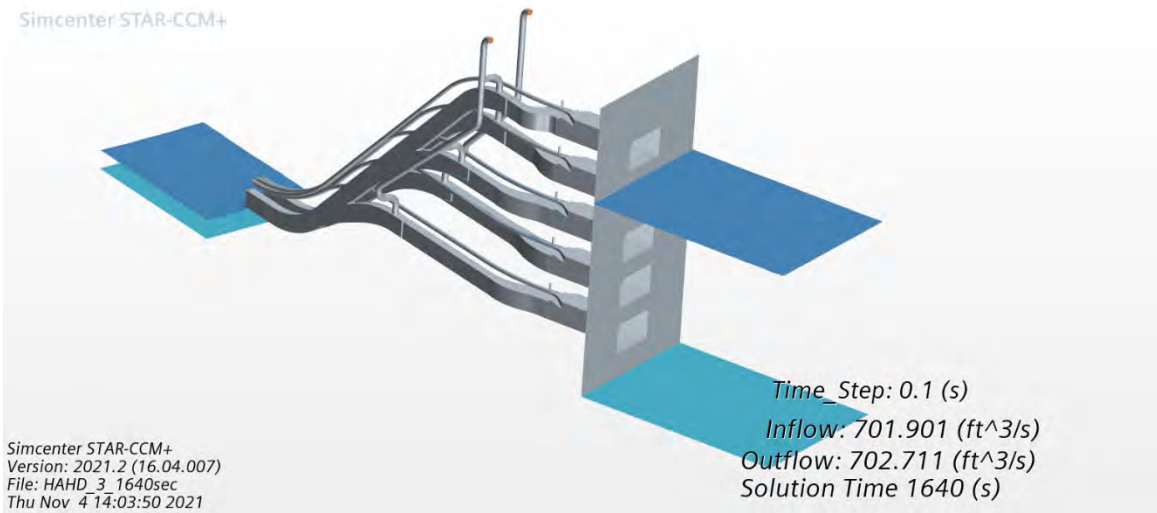
Simcenter STAR-CCM+
Time_Step: 0.1 (s)
Inflow: 701.901 (ft^3/s)
Outflow: 702.711 (ft^3/s)
Solution Time 1640 (s)
Simcenter STAR-CCM+
Version: 2021.2 (16.04.007)
File: HAHD_3_1640sec
Thu Nov 4 14:03:50 2021

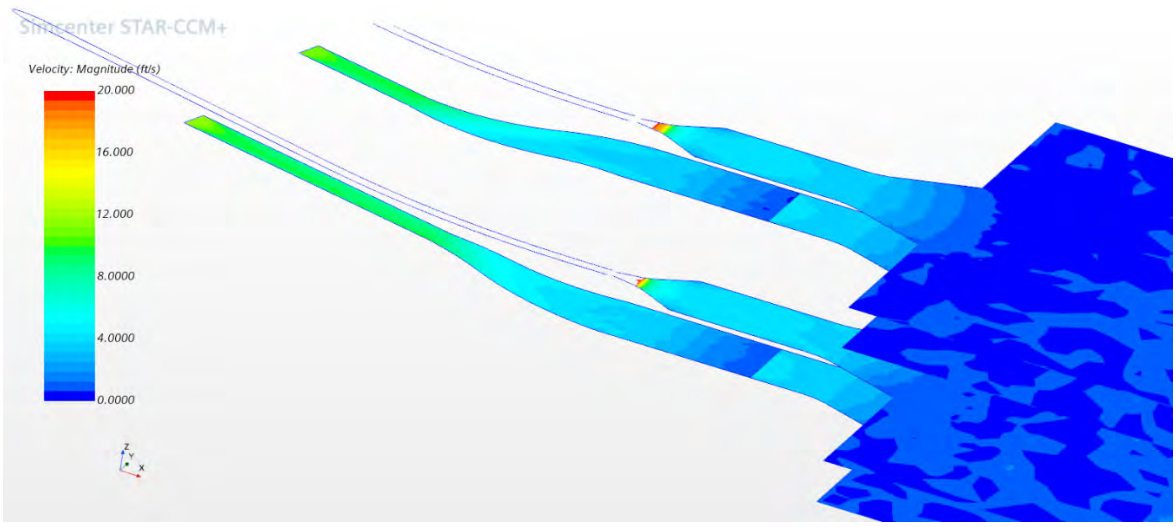
Simcenter STAR-CCM+
Velocity: Magnitude (ft/s)
20.000
16.000
12.000
8.0000
4.0000
0.0000

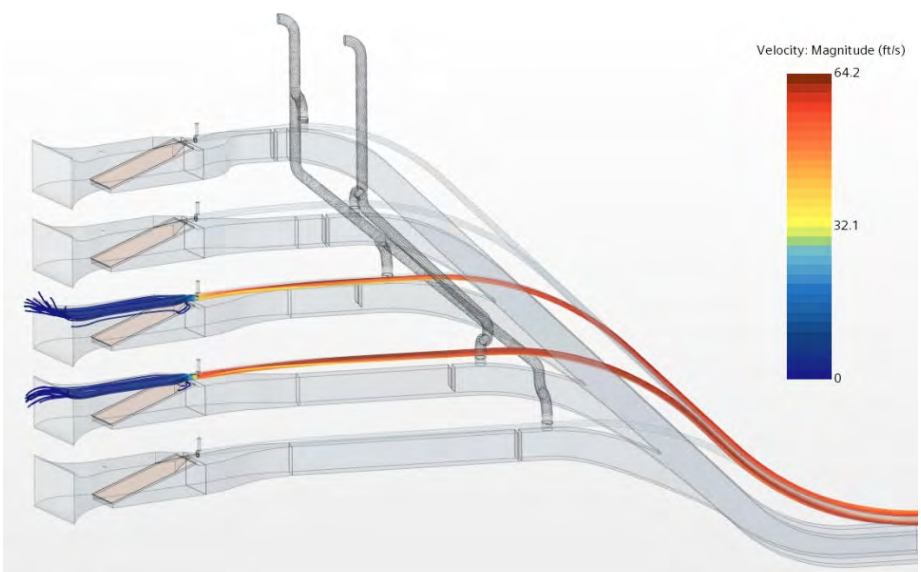
Velocity: Magnitude (ft/s)
64.2
32.1
0

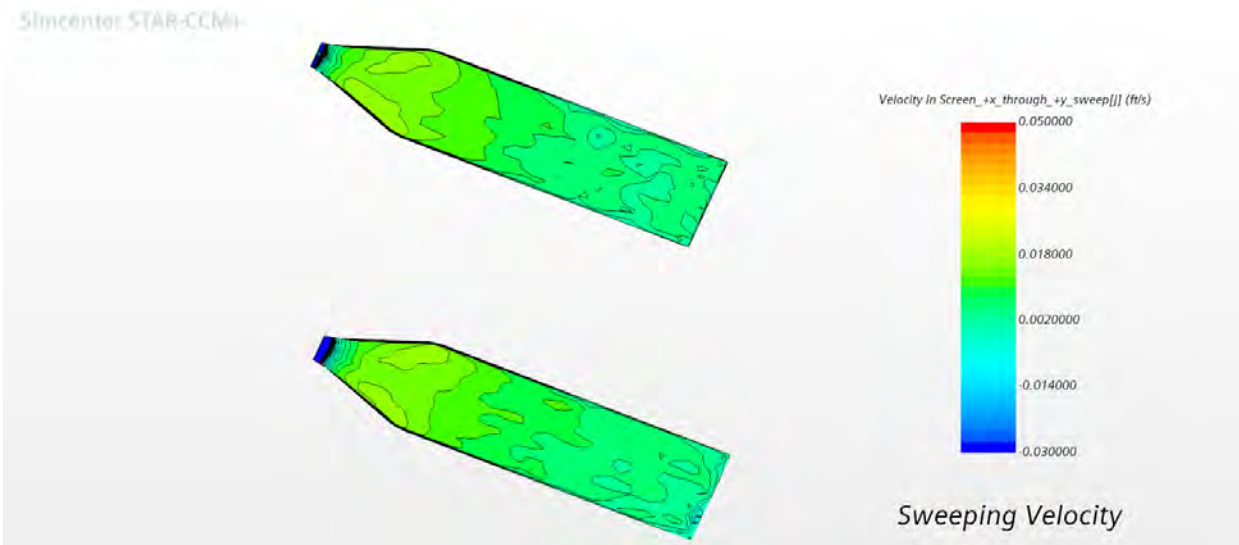
Velocity In Screen_+x_through_+y_sweep[j] (ft/s)
0.050000
0.034000
0.018000
0.0020000
-0.014000
-0.030000
Sweeping Velocity

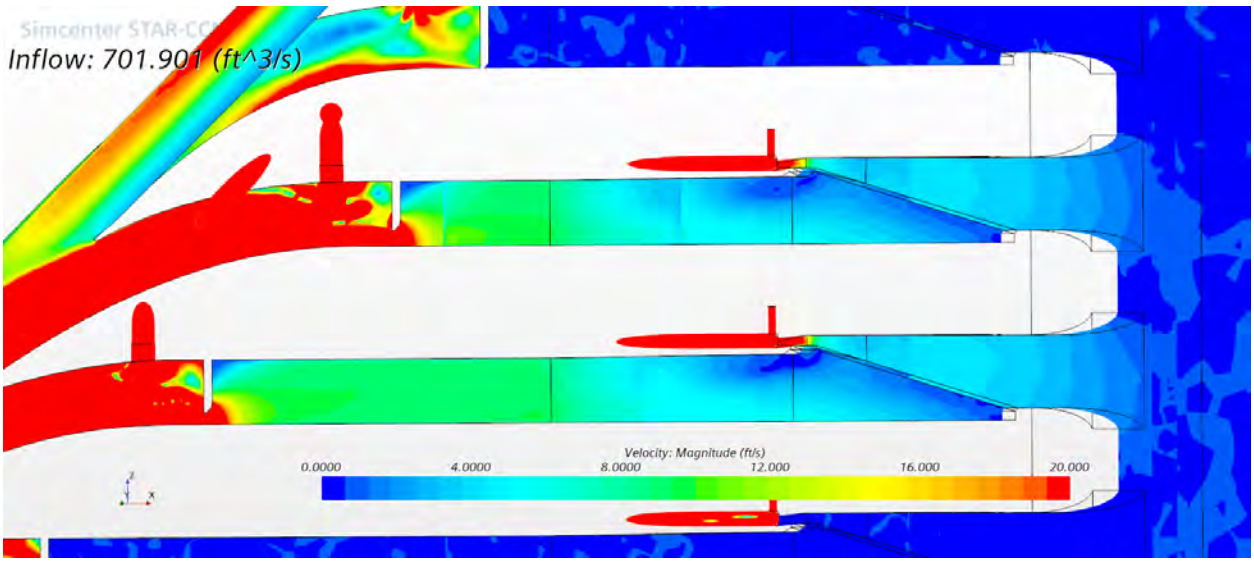
Inflow: 701.901 (ft^3/s)
Velocity: Magnitude (ft/s)
0.0000
4.0000
8.0000
12.000
16.000
20.000

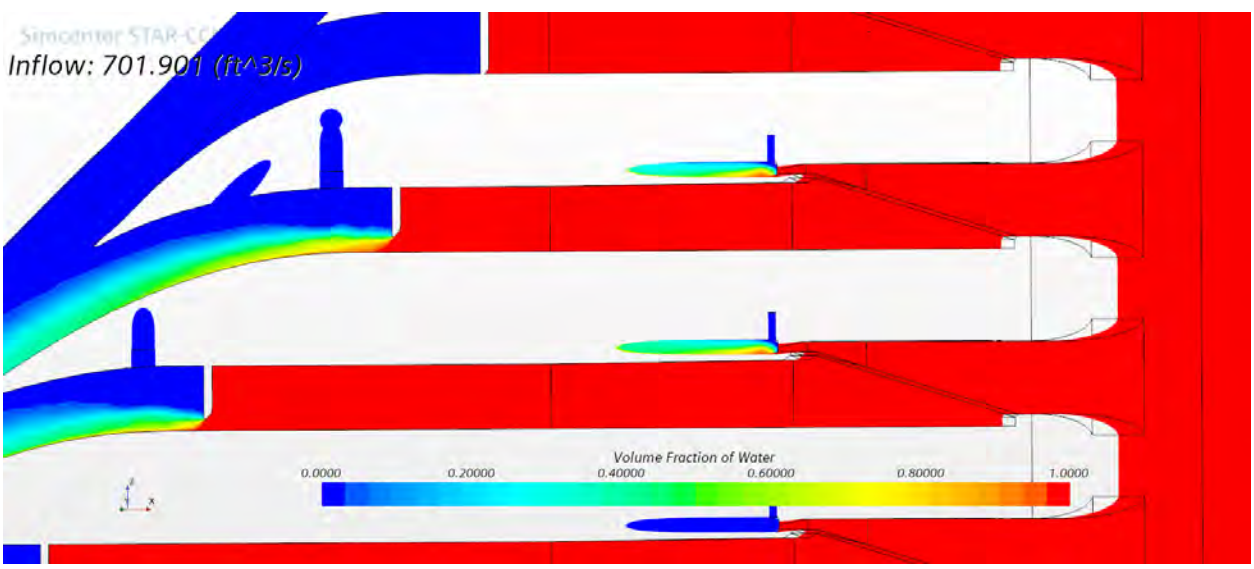
Inflow: 701.901 (ft^3/s)
Volume Fraction of Water
0.0000
0.20000
0.40000
0.60000
0.80000
1.0000

Run 7

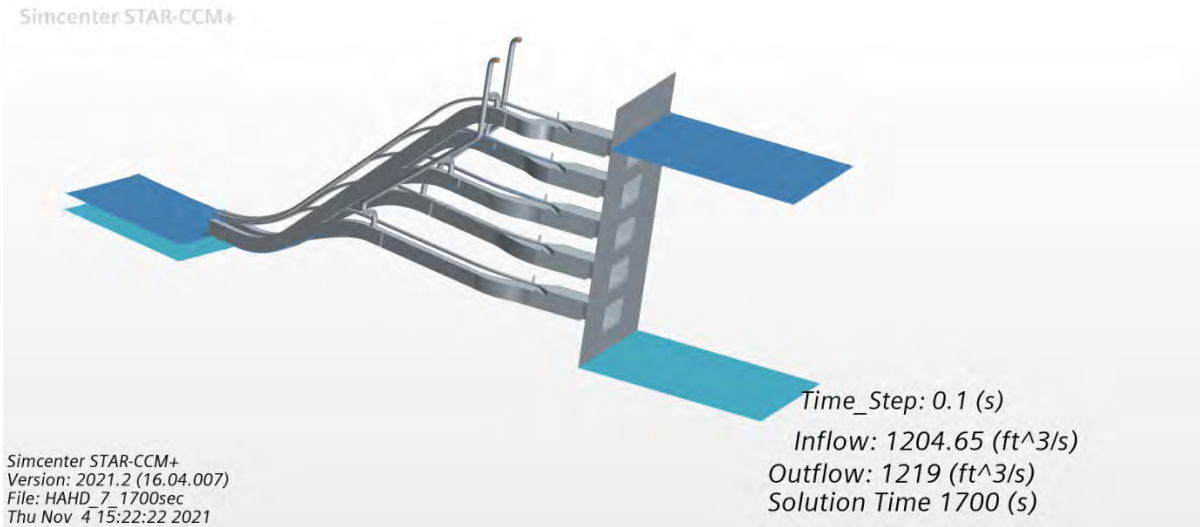
Simcenter STAR-CCM+
Time_Step: 0.1 (s)
Inflow: 1204.65 (ft^3/s)
Outflow: 1219 (ft^3/s)
Solution Time 1700 (s)
Simcenter STAR-CCM+
Version: 2021.2 (16.04.007)
File: HAHD_7_1700sec
Thu Nov 4 15:22:22 2021

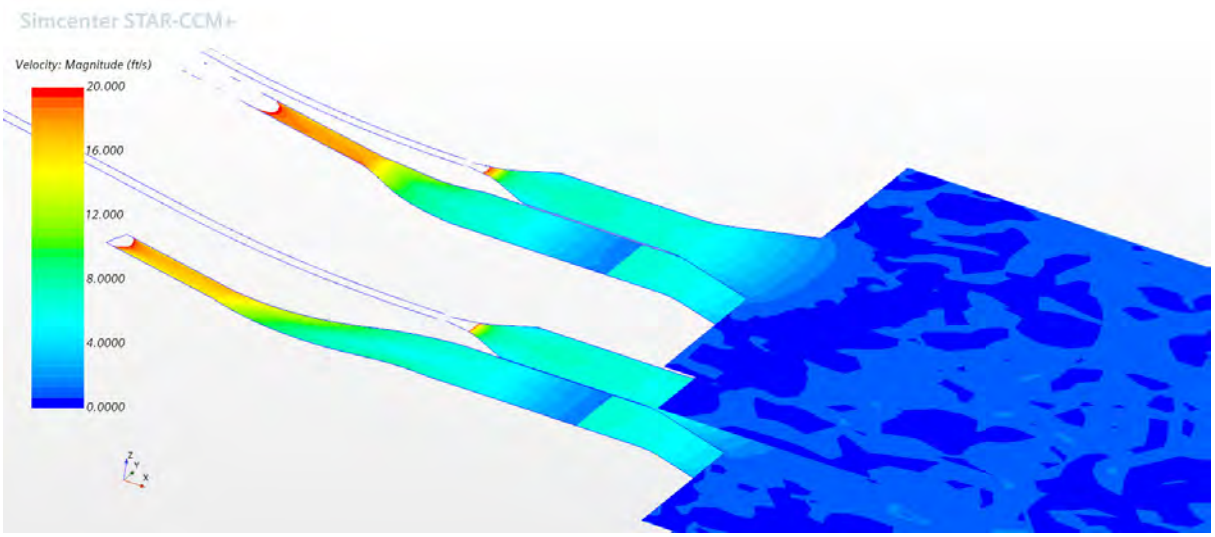
Simcenter STAR-CCM+
Velocity: Magnitude (ft/s)
20.000
16.000
12.000
8.0000
4.0000
0.0000

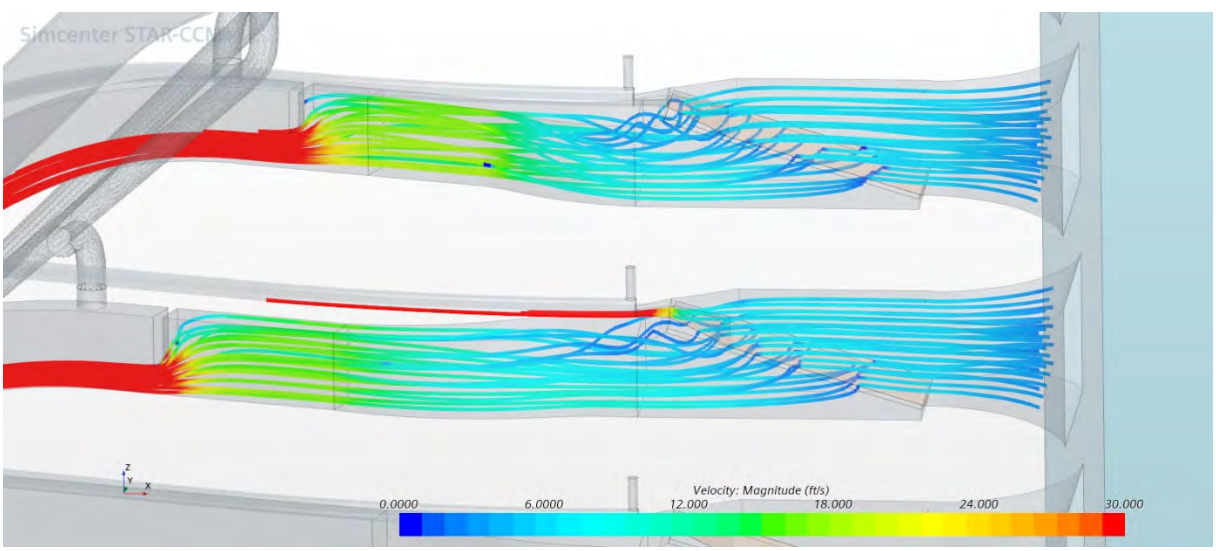
Velocity: Magnitude (ft/s)
0.0000
6.0000
12.000
18.000
24.000
30.000

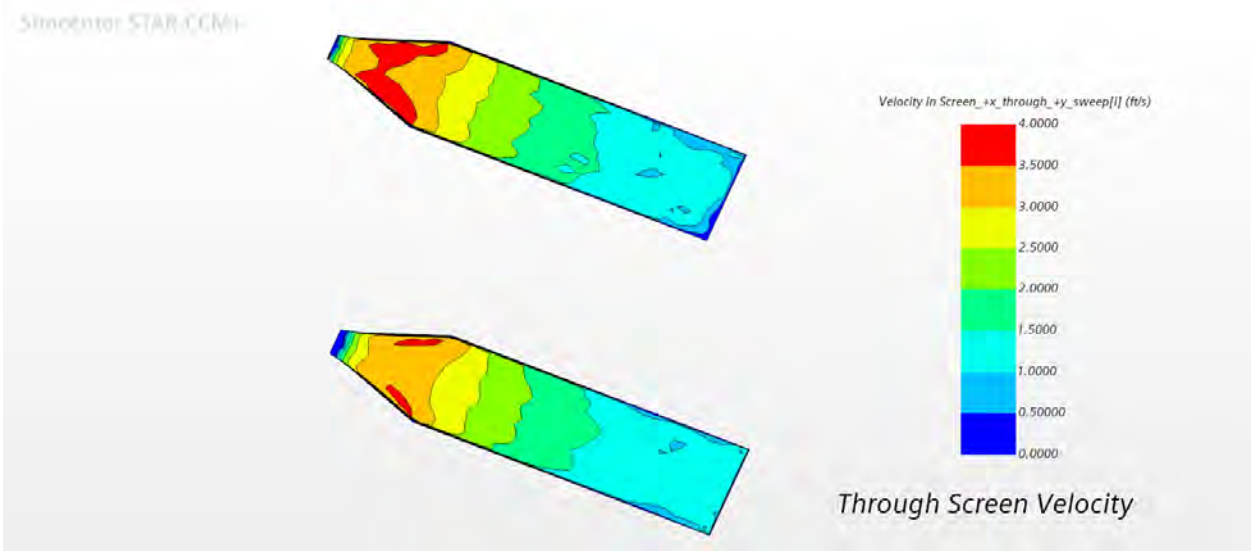
Velocity In Screen_+x_through_+y_sweep[i] (ft/s)
4.0000
3.5000
3.0000
2.5000
2.0000
1.5000
1.0000
0.50000
0.0000
Through Screen Velocity

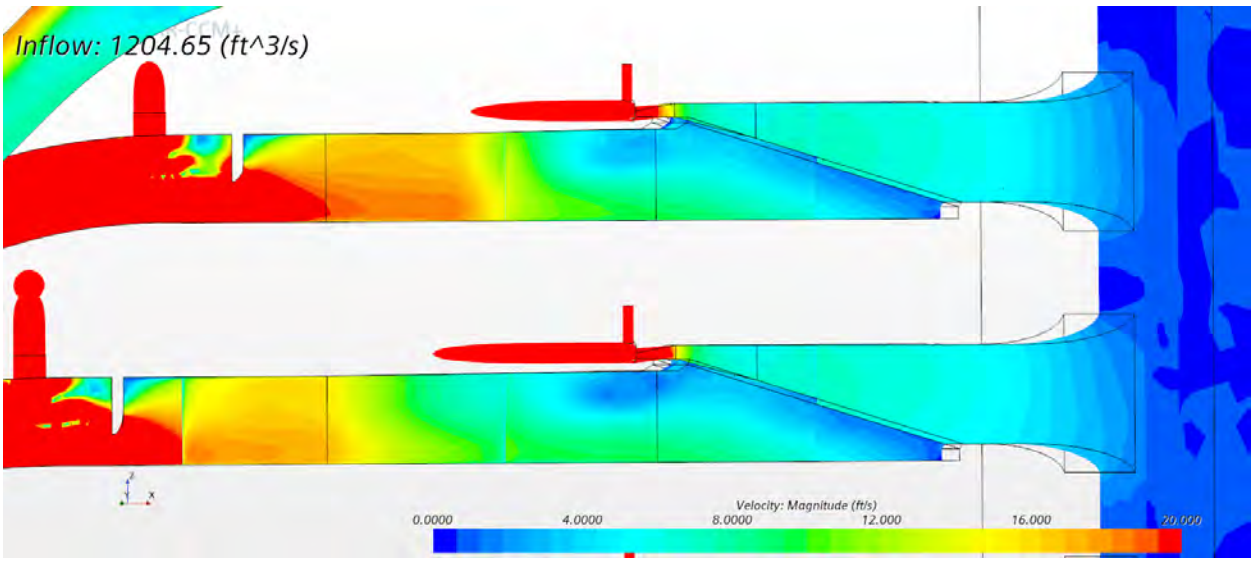
Inflow: 1204.65 (ft^3/s)
Velocity: Magnitude (ft/s)
0.0000
4.0000
8.0000
12.000
16.000
20.000

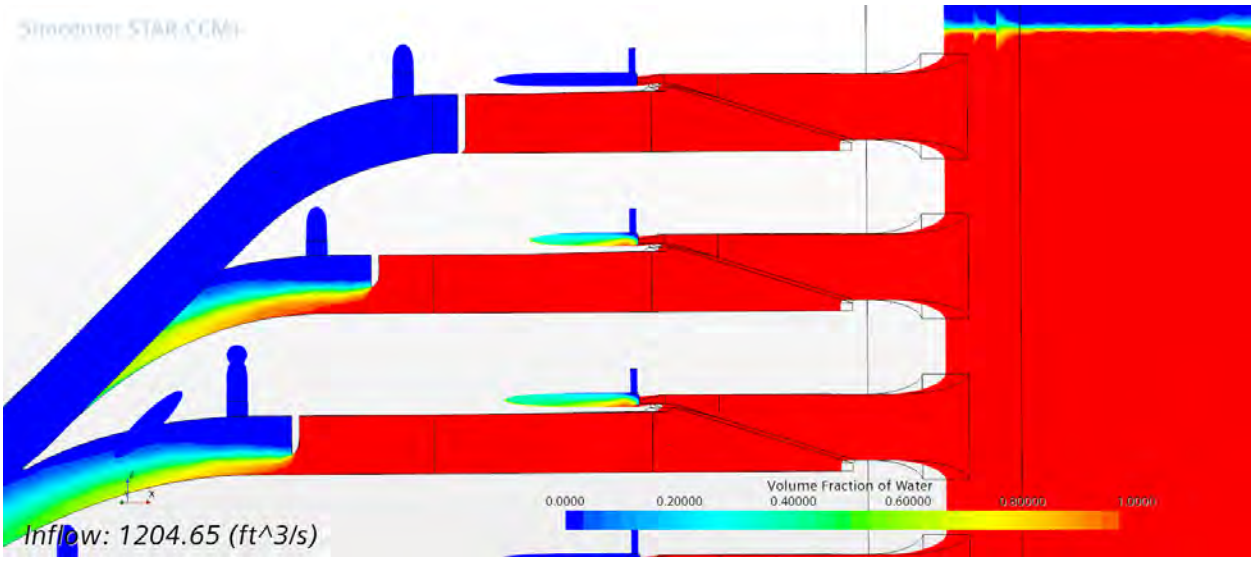
Volume Fraction of Water
0.0000
0.20000
0.40000
0.60000
0.80000
1.0000
Inflow: 1204.65 (ft^3/s)

Howard A. Hanson Dam
Additional Water Storage Project

Section 902 Post Authorization Change Validation Study – Fish Passage
King County, Washington

APPENDIX B-3

GEOTECHNICAL/GEOLOGY

Final Integrated Validation Report and

Supplemental Environmental Impact Statement

US Army Corps of Engineers®
Seattle District

TACOMA POWER
TACOMA WATER
TACOMA RAIL
TACOMA PUBLIC UTILITIES

INTRODUCTION

As indicated/summarized in the main body of the Engineering Appendix, this 15% design cost validation study generally relied on evaluations/calculations from the previous 95% design and associated work (e.g., GBR, tunnel reinforcement, excavation and rock pillar stability, retaining walls, pavements). Readers are referred to the previous design documentation for additional details on these evaluations, as necessary (see references and appendices).

CONTENTS

- **Lateral Earth Pressure Calculations**

  As part of this 15% design cost validation study, new/revised structures (e.g., fish collector tower, stilling basin) were evaluated for sliding stability and lateral earth pressure loads.

  Lateral earth pressures were calculated in accordance with EM 1110-2-2100 Stability Analysis of Concrete Structures.

  All retaining and subsurface walls were conservatively assumed to resist full compacted soil backfill lateral earth pressures (i.e., no silo effects), even if adjacent rock excavation faces may ultimately allow for assuming reduced soil loading in future design iterations.

  Soil properties were assumed based on soil fill properties in the previous GBR, which were judged to be typical of compacted granular backfill.

  Seismic inputs were updated from the previous 95% design based on the updated seismic parameters established in the DRAFT HAHD Periodic Assessment (2021). Lateral earth pressure coefficients and distributions provided to the structural engineers are summarized in this appendix.

  Lateral earth pressure coefficients were provided to the structural engineer for evaluations of various wall heights and assumed surface water and ground water levels, as necessary. Example lateral earth and groundwater pressure plots to facilitate review of the assumed pressure distributions but do not represent any particular wall design sections.

  Excerpts from historical project documents and USACE design standards are provided in this appendix for quick reference. See full reference document for complete documentation and background information.

  Lateral earth pressure spreadsheet calculations have been verified against the commercially available software programs (CWALSHT and ShoringSuite) and previously validated internal spreadsheet calculations. Additionally, the spreadsheet calculations have gone through internal design quality control review.

- **Tunnel Water Inflow Calculations**

  An estimate of water inflow into the deceleration tunnel was evaluated for water handling costing purposes.

LATERAL EARTH PRESSURE CALCULATIONS

Excerpts from USACE Design Standard - EM 1110-2-2100 Stability of Concrete Structures

See referenced design standard for complete documentation and background information.

Design cases and factor of safety excerpts from EM 1110-2-2100 Stability of Concrete Structures

3-2. Load Condition Categories

The load conditions that a structure may encounter during its service life are grouped into the load condition categories of usual, unusual, and extreme. Associated with each category is a likelihood that the load condition will be exceeded in a given time period. The load conditions, expressed in probabilistic terms, are provided in Table 3-1. The structural performance and the risk of damage or failure depends not only on the likelihood of the loading condition, but also on the safety factors or the safety provisions used, the degree of conservatism used in selecting the foundation strength parameters and hydrological data, and the degree of conservatism inherent in the methods used for the analysis. No attempt has been made to define the likelihood of damage or failure in probabilistic terms. However, the use of these guidelines in conjunction with other Corps guidance will provide structures with adequate protection against stability failure.

Table 3-1 Load Condition Probabilities

Load Condition Categories	Annual Probability (p)	Return Period (t_r)
Usual	Greater than or equal to 0.10	Less than or equal to 10 years
Unusual	Less than 0.10 but greater than or equal to 0.0033	Greater than 10 years but less than or equal to 300 years So, OBE 144-yr is unusual, not extreme.
Extreme	Less than 0.0033	Greater than 300 years

- *Usual* loads refer to loads and load conditions, which are related to the primary function of a structure and can be expected to occur frequently during the service life of the structure. A usual event is a common occurrence and the structure is expected to perform in the linearly elastic range.
- *Unusual* loads refer to operating loads and load conditions that are of infrequent occurrence. Construction and maintenance loads, because risks can be controlled by specifying the sequence or duration of activities, and/or by monitoring performance, are also classified as unusual loads. Loads on temporary structures which are used to facilitate project construction, are also classified as unusual. For an unusual event some minor nonlinear behavior is acceptable, but any necessary repairs are expected to be minor.
- *Extreme* loads refer to events, which are highly improbable and can be regarded as emergency conditions. Such events may be associated with major accidents involving impacts or explosions and natural disasters due to earthquakes or flooding which have a frequency of occurrence that greatly exceeds the economic

service life of the structure. Extreme loads may also result from the combination of unusual loading events. The structure is expected to accommodate extreme loads without experiencing a catastrophic failure, although structural damage which partially impairs the operational functions are expected, and major rehabilitation or replacement of the structure might be necessary.

Table 3-3 Required Factors of Safety for Sliding - Normal Structures

	Load Condition Categories		
Site Information Category	**Usual**	**Unusual**	**Extreme**
Well Defined	1.4	1.2	1.1
Ordinary	1.5	1.3	1.1
Limited	3.0	2.6	2.2

Developed soil friction angle requirement excerpt from EM 1110-2-2100 Stability of Concrete Structures

b. Soil forces. Lateral soil forces acting on the single wedge should be calculated using the minimum required factor of safety against sliding to obtain the developed soil strength parameters ϕ_d and c_d. The use of developed parameters results in a force larger than the active soil force on the driving side, and a force smaller than the passive soil force on the resisting side These developed parameters shall be used in Equations 5-3 through 5-15 to calculate the lateral soil forces acting on the driving side, and used in Equations 5-16 through 5-22 to calculate the lateral soil forces acting on the resisting side. Soil forces due to seismic events are discussed in Section 5-5. If there is a significant difference between the calculated and minimum required safety factors, it may be appropriate to re-evaluate the developed soil strength parameters used to determine the soil forces. The values for the developed soil strength parameters shall be determined as:

$$\phi_d = \tan^{-1}\left(\frac{\tan\phi}{FS_s}\right) \quad and \quad c_d = \frac{c}{FS_s} \qquad (5\text{-}1, 5\text{-}2)$$

where FS_s = required factor of safety against sliding

Assumptions & Equations For Coulomb, Wood, and Monobe-Okabe Methods from EM 1110-2-2100 Stability of Concrete Structures

(2) Equivalent fluid pressure coefficients from Coulomb's equation. Coulomb's equation may be used to calculate the equivalent fluid-pressure coefficient when the surface of the backfill wedge is planar and unbroken, if certain conditions are met. These conditions are:

- When backfill has a sloping top surface. There can be only one soil material. The water-table must be either completely above or completely below the backfill. The backfill must be cohesionless. Surcharges must be uniformly distributed and cover the entire top surface of the backfill wedge.
- When backfill has a horizontal top surface. There may be more than one soil material, if the top surface of all soil layers are horizontal. The water-table may lie within the backfill. The soil may be either cohesive or cohesionless. Surcharges must be uniformly distributed and cover the entire top surface of the backfill wedge.

When any of the above conditions are not applicable, the equivalent fluid pressure coefficient determined by the wedge method shall be used. The equation for the equivalent fluid-pressure coefficient, using the Coulomb Equation is:

$$K = \frac{\cos^2\phi_d}{\cos\delta\left[1+\sqrt{\frac{\sin(\phi_d+\delta)\sin(\phi_d-\beta)}{\cos\delta\cos\beta}}\right]^2}$$

a. Behavior of Backfills.

(1) Non-Yielding Backfills. For low intensity ground motions the backfill material may respond within the range of linear elastic deformations. Walls with non-yielding backfills can be expected to have dynamic soil pressures greater than those predicted by the Mononobe-Okabe method. The dynamic soil pressures and associated forces in the backfill may be analyzed as an elastic response using Wood's method as described in ITL 92-11 (Ebeling and Morrision, 1992). A reasonable estimate for determining the additional lateral seismic soil force against a soil retaining structure, for non-yielding backfill conditions, can be determined as

$$F_{sr} = \gamma h^2 k_h$$

In this case kh = delta(Kae) and the pressure is "uniform" (not 1/2 like if triangular), but still applied at 0.63 H. [So it's really like 2*kh]

where: F_{sr} = Lateral seismic force representing dynamic soil pressure effects (not including static)

γ = Unit weight of soil. Use moist or submerged unit weight when all soil is above or below the water table. For partially submerged soils the unit weight shall be proportioned by a weighted average.

h = Height of backfill

k_h = Effective peak ground acceleration, expressed as a decimal fraction of the acceleration of gravity

(2) Yielding Backfills. The relative motion of the structure and backfill material may be large enough to induce a limit or failure state in the soil. This condition may be modeled by the Mononobe-Okabe method (Mononobe and Matsou (1929), and Okabe (1926)), in which a wedge of soil bounded by the structure and an assumed failure plane are considered to move as a rigid body with the same horizontal acceleration. The dynamic soil pressures using this method are described in Appendix G.

G-2. Mononobe-Okabe Analysis

This analysis is an extension of the Coulomb sliding-wedge theory taking into account horizontal and vertical inertial forces acting on the soil. The analysis is described in detail by Seed and Whitman (1970) and Whitman and Liao (1985).

a. Assumptions. The following assumptions are made by the Mononobe-Okabe analysis:

- The structure is free to yield sufficiently to enable full soil strength or active pressure conditions to be mobilized.
- The backfill is completely above or completely below the water table, unless the top surface is horizontal, in which case the backfill can be partially saturated.
- The backfill is cohesionless.
- The top surface is planar (not irregular or broken).
- Any surcharge is uniform and covers the entire surface of the soil wedge.
- Liquefaction is not a problem.

b. Equations. Equilibrium considerations of the soil wedge on the driving and resisting sides lead to the following Mononobe-Okabe equations for computing the active and passive forces exerted by the soil on the structure when the soil mass is at the point of failure (total shear resistance mobilized) along the slip plane of the Mononobe-Okabe wedge shown in Figure G-1:

For driving (active) wedges (Figure G-1a),

$$P_{AE} = \frac{1}{2}K_{AE}\gamma(1-k_v)h^2 \qquad (G\text{-}1)$$

$$K_{AE} = \frac{\cos^2(\phi-\psi-\theta)}{\cos\psi\cos^2\theta\cos(\psi+\theta+\delta)\left[1+\sqrt{\frac{\sin(\phi+\delta)\sin(\phi-\psi-\beta)}{\cos(\beta-\theta)\cos(\psi+\theta+\delta)}}\right]^2} \qquad (G\text{-}2)$$

For resisting (passive) wedges (Figure G-1b),

$$P_{PE} = \frac{1}{2}K_{PE}\gamma(1-k_v)h^2 \qquad (G\text{-}3)$$

$$K_{PE} = \frac{\cos^2(\phi-\psi-\theta)}{\cos\psi\cos^2\theta\cos(\psi-\theta+\delta)\left[1-\sqrt{\frac{\sin(\phi+\delta)\sin(\phi-\psi+\beta)}{\cos(\beta-\theta)\cos(\psi-\theta+\delta)}}\right]^2} \qquad (G\text{-}4)$$

P_{AE} and P_{PE} are the combined static and dynamic forces due to the driving and resisting wedges, respectively. The equations are subject to the same limitations that are applicable to Coulomb's equations. Definitions of terms are as follows:

γ = unit weight of soil
k_v = vertical acceleration in g's
h = height of structure
ϕ = internal friction angle of soil
$\psi = \tan\left(\frac{k_h}{1-k_v}\right)$ = seismic inertia angle
k_h = horizontal acceleration in g's
θ = inclination of interface with respect to vertical (this definition of θ is different from θ] in Coulomb's equations)
δ = soil-structure friction angle
β = inclination of soil surface (upward slopes away from the structure are positive)

(c) Simplifying Conditions. For the usual case where k_v, δ, and θ are taken to be zero, the equations reduce to:

$$K_{AE} = \frac{\cos^2(\phi-\psi)}{\cos^2\psi\left[1+\sqrt{\frac{\sin\phi\sin(\phi-\psi-\beta)}{\cos\beta\cos\psi}}\right]^2} \qquad (G\text{-}5)$$

$$K_{PE} = \frac{\cos^2(\phi-\psi)}{\cos^2\psi\left[1-\sqrt{\frac{\sin\phi\sin(\phi-\psi+\beta)}{\cos\beta\cos\psi}}\right]^2} \qquad (G\text{-}6)$$

where

$\psi = \tan^{-1}(k_h)$

and

$P_{AE} = ½ K_{AE}\gamma h^2$
$P_{PE} = ½ K_{PE}\gamma h^2$

For the case when the water table is above the backfill, P_{AE} and P_{PE} must be divided into static and dynamic components for computing the lateral forces. Buoyant soil weight is used for computing the static component below the water table, with the hydrostatic force added, and saturated soil weight is used for computing the dynamic component.

(d) Observations. General observations from using Mononobe-Okabe analysis are as follows:

(1) As the seismic inertia angle ψ increases, the values of K_{AE} and K_{PE} approach each other and, for a vertical backfill face (θ = 0), become equal when $\psi = \phi$.

(2) The locations of P_{AE} and P_{PE} are not given by the Mononobe-Okabe analysis. Seed and Whitman (1970) suggest that the dynamic component ΔP_{AE} be placed at the upper one-third point, ΔP_{AE} being the difference between P_{AE} and the total active force from Coulomb's active wedge without the earthquake. The general wedge earthquake analysis described in paragraph 3-26c places the dynamic component ΔP_{AE} at the upper one-third point also, but

This is really only way to do M-O, and it is acceptable under the criteria in this EM.

computes ΔP_{AE} as being the difference between P_{AE} and the total active force from the Mononobe-Okabe wedge. The latter method for computing ΔP_{AE}, which uses the same wedge for computing the static and dynamic components of P_{AE}, is preferred.

Soil Property and Sesmic Design Input Excerpts from USACE HAHD Design References - HAHD FPF 2008 Geotechnical Baseline Report & DRAFT 2021 Periodic Assessment

See these references and supporting documentation for complete documentation and background information.

Assumed Soil Backfill Properties from HAHD FPF 2008 GBR

Table 10. Summary – Geotechnical Baseline Properties

Property	Andesite	Pyro-clastite	Basaltic Andesite	GP-GM Fill	GP-GM Native	ML Native
Spec. Gravity (bulk dry)	2.55[1]	2.30[1]	2.63[1]	--	--	--
Weight (dry, pcf)	--	--	--	125.0	133.0	100.0
Weight (moist, pcf)	170.6[1]	145.8[1]	164.8[1]	--	--	--
Unconfined Compr. Strength (psi)	7,363[1]	3,190[1]	8,140[1]	--	--	--
Shear Strength at 50 psi (psi/phi)	52/45[1]	33/20[1,3]	31/31[1]	--	--	--
Shear Strength (phi/c)	--	--	--	35°/0[2]	37°/0[2]	27°/100[2]
Tensile Strength (psi)	1,360[1]	--	--	--	--	--
Poisson's Ratio	0.266[1]	--	--	--	--	--
RQD (%)	85.4[1]	90.1[1]	67.8[1]	n/a	n/a	n/a
RMR	68.9[1]	65.7[1]	62.5[1]	n/a	n/a	n/a
Q	11.8[4]	21.4[4]	3.8[4]	n/a	n/a	n/a
Hydraulic Cond. (ft/day)	<2	<2	<2	--	--	--

[1] Average values – actual values my vary as much as 20 percent
[2] Estimated values based on material classification
[3] Test conducted at 45 psi vs 50 psi
[4] Geometric mean, not arithmetic mean
pcf – pounds per cubic foot
phi – internal angle of friction
psi – pounds per square inch
c – cohesion (in pounds per square foot)

PGA from HAHD DRAFT 2021 Periodic Assessment

Table 5.3 Peak Horizontal Ground Acceleration Summary (USGS 2018)

Earthquake	Return Period (years)	PGA (g)
Operating basis earthquake (OBE)	145	0.113
Maximum design earthquake (MDE) for "non-critical" structures	950	0.294
IBC "maximum considered earthquake"	2,475	0.427
Intermediate earthquake	4,950	0.540
Long return period earthquake	10,000	0.674

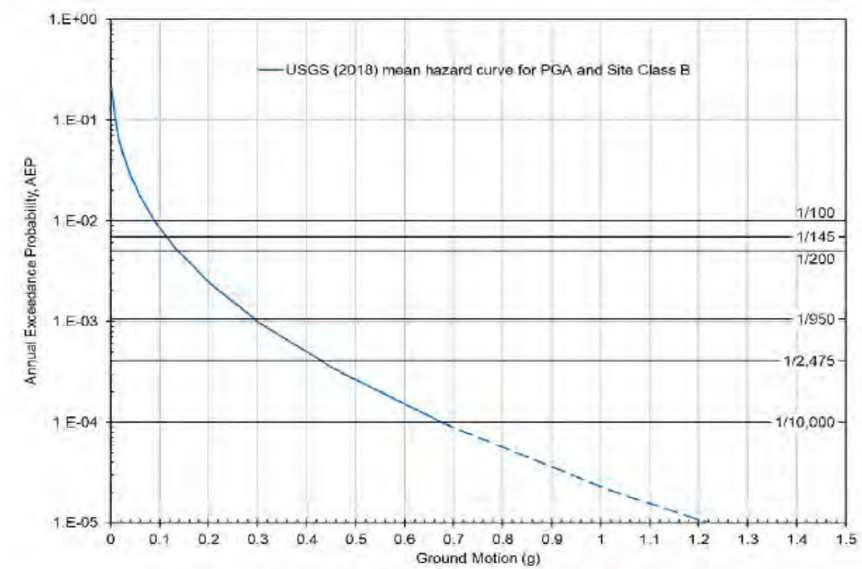

Figure 5.6. Seismic Hazard Curve for PGA (Site Class B)

Table X - Summary of updated lateral earth pressure coefficients for backfilled retaining and subsurface walls.

Design Case				Usual - Static	Unusual - OBE	Extreme - MDE
Factor of Safety - Sliding				1.5	1.3	1.1
Soil Backfill Properties	Unit Weight (pcf)		Total	130	130	130
			Buoyant	67.6	67.6	67.6
	Friction Angle		Nominal (ϕ)	35	35	35
			Developed[1] (ϕ_d)	25.0	28.3	32.5
Seismic Parameters	Return Period (yr)			--	145	950
	PGA (g)			--	0.113	0.294
	Seismic Coefficient, k_h (g)			--	0.075	0.196
Lateral Earth Pressure Coefficients[2,3]	Driving Side	Static	K(a)	0.405	0.357	0.301
		Seismic - ΔK(a)e[4]	Non-Yielding Backfill (Wood - Fluid Equivalent[5])	--	0.151	0.392
			Yielding Backfill (M-O[6])	--	0.048	0.129
	Resisting Side	Static	K(p)	2.466	2.804	3.320
		Seismic (M-O)	ΔK(p)e	--	-0.129	-0.378

Notes:

[1] EM 1110-2-2100 Stability Evaluations of Concrete Structures requires the use of developed friction angle in calculations of soil lateral earth pressure loads. Developed soil friction angle is defined as $\phi_d = \tan^{-1}((\tan \phi)/[FS\text{-}Sliding])$. See EM 1110-2-2100 for additional information.

[2] Values assume level backfill.

[3] Lateral earth pressure coefficients refer to K(a) - driving side and K(p) - resisting side per typical geotechnical nomenclature for active and passive pressures. However, these are not true active or passive parameters since EM 1110-2-2100 methods requires the use of developed strengths based on the factor of safety against sliding applied to the soil shear strength for calculation of lateral earth pressures.

[4] Seismic earth pressures are in addition to static earth pressures and groundwater pore pressures. These additional seismic lateral earth pressure coefficients should be applied to total unit weight or total stress, even for submerged backfill conditions.

[5] Wood calculations assume a uniform pressure, not a triangular or fluid pressure. Thus, for comparison to other lateral earth pressure coefficients, Wood - Fluid Equivalent values shown in table include a factor of 2 (i.e. $2*k_h$). For calculating non-yielding backfill seismic force per Wood method use k_h shown in table and equations in EM 1110-2-2100 or assume triangular/fluid pressure using the fluid equivalent values similar to typical earth pressure calculations. Resultant should be applied at 0.63H.

[6] Monobe-Okabe resultant should be applied at 0.67H (i.e., inverted triangle).

Lateral Earth Pressures for Stability Analysis of Concrete Gravity Structures per EM 1110-2-2100 - Coulomb, Mononbe-Okabe, and Wood Methods (See Assumptions For Use)

Project: HAHD FPF
Design Element: Gen. Coefficients & LEP Distributions
Date: 11/24/2021 (Appendix Edits/Updates)
USACE District/Section: CENWS-END-G
Engineer: Swenson

Design Case: Usual - Static
Factor of Safety (FS) = 1.5
Base of Wall EL (ft) = 0
Top of Wall EL (ft) = 10 — From top driving side layer EL
Total Wall Heigth (ft) = 10
Retained Wall Height (ft) = 7 — Based on top resisting side layer EL
Wall Embedment (ft) = 3

Groundwater
Unit Weight (pcf) = 62.4
EL Driving Side (ft) = 10 — Cannot be above top of wall/soil
EL Resisting Side (ft) = 7 — May be above top of soil

Surcharge
Retained Side Uniform Surcharge (psf) = 250

Seismic Parameters (if applicable)
Earthquake:
Return Period (yr) =
PGA (g) =
kh (g) = 0 — 2/3*PGA per EM 1110-2-2100
ν (deg)= 0.0
Driving Side Backfill Condition (Yielding/Non-Yielding): — Yielding if wall displacement/deformation during earthquake is sufficient to mobilize active wedge (top of wall movement ~0.1%-0.4% H)

	U	V	W	X	Y	Z	AA	AB	AC	AD	AE	AF	AG	AH	AI	AJ	AK	AL	AM	AN
10				Layer Elevations					Soil Strength Parameters		**Driving Side - Coulomb (Static), Mononobe-Okabe (Yielding Backfill), Wood (Non-Yielding Backfill)**					**Resisting Side - Coulomb (Static), Mononobe-Okabe (Yielding Backfill)**				
11				Driving Side		Resisting Side (account for potential erosion/removal of soil)			Friction Angle (deg)		Slope above wall (β, degrees, positive = slopes upward away from structure)	Interface Friction Angle (δ, degrees, = β but ≥ 0)	Static	M-O Seismic Parameters (if applicable)		Slope below wall (β, degrees, negative = slopes downward away from structure)	Interface Friction Angle (δ, degrees, = 0 for resisting side)	Static	M-O Seismic Parameters (if applicable)	
12		Soil Unit	Description	Top	Bottom	Top	Bottom	Unit Weight (pcf)	Nominal (ϕ)	Developed (ϕ_d)			K(a)	Kae	ΔKae			K(p)	Kpe	ΔKpe
13		1	Structural Fill	10	-100	3	-100	130	35	25.0	0	0	0.405	0.000	0.000	0	0	2.466	0.000	0.000
14		2																		
15		3																		
16		4																		
17		5																		
18		6																		
19		7																		
20		8																		
21		9																		
22		10																		
23	vlookup column reference:	1	2	3	4	5	6	7	8	9	10	11	12	13	14	15	16	17	18	19

Driving Side
Driving Side Resultant Seismic Surcharge Ht (H) = — 2/3*H for yielding backfill and 0.63*H for non-yielding backfill per EM 1110-2-2100
Resultant Seismic Soil Load (ΔPe, lb/ft) = 0
Seismic Component Soil LEP top (psf) = 0
Seismic Component Soil LEP bottom (psf) = 0
Seismic Component Soil LEP slope (psf/ft) = 0.00

Driving Side

30																			
31						Design Lateral Earth and Pore Pressures													
32	Elevation (ft)	Soil Unit	Pore Pressure (psf)	Vertical Stress (psf)		Soil Pressure (psf)		Surcharge (psf)		**Total Horizontal Static Pressure** (Pore Pressure+ Soil+Surcharge) (psf)	Soil Pressure - Seismic Component (psf)		Surcharge Pressure - Seismic Component (psf)		Horizontal			**Total Horizontal Seismic Pressure** (Pore Pressure+Static (Soil+Surcharge) +Seismic (Soil+Surcharge)) (psf)	Soil Unit
33				Total	Effective	Vertical + Horizontal	Horizontal	Vertical + Horizontal	Horizontal		Vertical + Horizontal	Horizontal	Vertical + Horizontal	Horizontal	Soil+Surcharge Pressure - Seismic Component (psf)	Incremental Soil+Surcharge Load - Seismic Component (ΔPei, lb/ft)	Redistributed Soil+Surcharge Pressure - Seismic Component (psf)		
34	10.0	1	0	0	0	0	0	101	101	101	0	0	0	0	0	0	0	0	0
35	9.75	1	16	33	17	7	7	101	101	124	0	0	0	0	0	0	0	0	0
36	9.50	1	31	65	34	14	14	101	101	146	0	0	0	0	0	0	0	0	0
37	9.25	1	47	98	51	21	21	101	101	169	0	0	0	0	0	0	0	0	0
38	9.00	1	62	130	68	27	27	101	101	191	0	0	0	0	0	0	0	0	0
39	8.75	1	78	163	85	34	34	101	101	214	0	0	0	0	0	0	0	0	0
40	8.50	1	94	195	101	41	41	101	101	236	0	0	0	0	0	0	0	0	0
41	8.25	1	109	228	118	48	48	101	101	259	0	0	0	0	0	0	0	0	0
42	8.00	1	125	260	135	55	55	101	101	281	0	0	0	0	0	0	0	0	0
43	7.75	1	140	293	152	62	62	101	101	303	0	0	0	0	0	0	0	0	0
44	7.50	1	156	325	169	69	69	101	101	326	0	0	0	0	0	0	0	0	0
45	7.25	1	172	358	186	75	75	101	101	348	0	0	0	0	0	0	0	0	0
46	7.00	1	187	390	203	82	82	101	101	371	0	0	0	0	0	0	0	0	0
47	6.75	1	203	423	220	89	89	101	101	393	0	0	0	0	0	0	0	0	0
48	6.50	1	218	455	237	96	96	101	101	416	0	0	0	0	0	0	0	0	0
49	6.25	1	234	488	254	103	103	101	101	438	0	0	0	0	0	0	0	0	0
50	6.00	1	250	520	270	110	110	101	101	461	0	0	0	0	0	0	0	0	0
51	5.75	1	265	553	287	116	116	101	101	483	0	0	0	0	0	0	0	0	0
52	5.50	1	281	585	304	123	123	101	101	506	0	0	0	0	0	0	0	0	0
53	5.25	1	296	618	321	130	130	101	101	528	0	0	0	0	0	0	0	0	0
54	5.00	1	312	650	338	137	137	101	101	550	0	0	0	0	0	0	0	0	0
55	4.75	1	328	683	355	144	144	101	101	573	0	0	0	0	0	0	0	0	0
56	4.50	1	343	715	372	151	151	101	101	595	0	0	0	0	0	0	0	0	0
57	4.25	1	359	748	389	158	158	101	101	618	0	0	0	0	0	0	0	0	0
58	4.00	1	374	780	406	164	164	101	101	640	0	0	0	0	0	0	0	0	0
59	3.75	1	390	813	423	171	171	101	101	663	0	0	0	0	0	0	0	0	0
60	3.50	1	406	845	439	178	178	101	101	685	0	0	0	0	0	0	0	0	0
61	3.25	1	421	878	456	185	185	101	101	708	0	0	0	0	0	0	0	0	0
62	3.00	1	437	910	473	192	192	101	101	730	0	0	0	0	0	0	0	0	1
63	2.75	1	452	943	490	199	199	101	101	753	0	0	0	0	0	0	0	0	1
64	2.50	1	468	975	507	206	206	101	101	775	0	0	0	0	0	0	0	0	1
65	2.25	1	484	1,008	524	212	212	101	101	797	0	0	0	0	0	0	0	0	1
66	2.00	1	499	1,040	541	219	219	101	101	820	0	0	0	0	0	0	0	0	1
67	1.75	1	515	1,073	558	226	226	101	101	842	0	0	0	0	0	0	0	0	1
68	1.50	1	530	1,105	575	233	233	101	101	865	0	0	0	0	0	0	0	0	1
69	1.25	1	546	1,138	592	240	240	101	101	887	0	0	0	0	0	0	0	0	1
70	1.00	1	562	1,170	608	247	247	101	101	910	0	0	0	0	0	0	0	0	1
71	0.75	1	577	1,203	625	254	254	101	101	932	0	0	0	0	0	0	0	0	1
72	0.50	1	593	1,235	642	260	260	101	101	955	0	0	0	0	0	0	0	0	1
73	0.25	1	608	1,268	659	267	267	101	101	977	0	0	0	0	0	0	0	0	1
74	0.00	1	624	1,300	676	274	274	101	101	999	0	0	0	0	0	0	0	0	1

Plot Info		
	GSEL	X
Driving Side	10.0	0
	10.0	999
Resisting Side	3	0
	3	-937
Wall Top	10	0
Wall Bottom	0	0

Resisting Side

Resisting Side Resultant Seismic Surcharge Ht (H) = 0.67 — 2/3*H for yielding backfill per EM 1110-2-2100
Resultant Seismic Soil Load (ΔPpe, lb/ft) = 0
Seismic Component Soil LEP top (psf) = 0
Seismic Component Soil LEP bottom (psf) = 0
Seismic Component Soil LEP slope (psf/ft) = 0.00

Resisting Side

	Vertical Stress (psf)			Design Lateral Earth and Water/Pore Pressures - All Pressures Horizontal (δ = 0)						Resisting Side Plots - (negative of calculated values for plotting)				
Water/Pore Pressure (psf)	Total	Based on Total Soil Weight only for M-O, in case submerged	Effective	Soil (psf)	**Total Static Pressure** (Water/Pore Pressure+ Soil) (psf)	Soil Pressure - Seismic Component (psf)	Incremental Soil Load - Seismic Component (ΔPpei, lb/ft)	Redistributed Soil Pressure - Seismic Component (psf)	**Total Seismic Pressure** (Pore Pressure+Static Soil+Seismic Soil) (psf) [***does **not** include hydrodynamic pressure of free water above soil***]	Water/Pore Pressure (psf)	Soil (psf)	**Total Static Pressure** (Water/Pore Pressure+ Soil) (psf)	Redistributed Soil Pressure - Seismic Component (psf)	**Total Seismic Pressure** (Pore Pressure+Static Soil+Seismic Soil) (psf) [***does **not** include hydrodynamic pressure of free water above soil***]
0	0	0	0	0	0	0	0	0	0	0	0	0	0	0
0	0	0	0	0	0	0	0	0	0	0	0	0	0	0
0	0	0	0	0	0	0	0	0	0	0	0	0	0	0
0	0	0	0	0	0	0	0	0	0	0	0	0	0	0
0	0	0	0	0	0	0	0	0	0	0	0	0	0	0
0	0	0	0	0	0	0	0	0	0	0	0	0	0	0
0	0	0	0	0	0	0	0	0	0	0	0	0	0	0
0	0	0	0	0	0	0	0	0	0	0	0	0	0	0
0	0	0	0	0	0	0	0	0	0	0	0	0	0	0
0	0	0	0	0	0	0	0	0	0	0	0	0	0	0
0	0	0	0	0	0	0	0	0	0	0	0	0	0	0
16	16	0	0	0	16	0	0	0	0	-16	0	-16	0	0
31	31	0	0	0	31	0	0	0	0	-31	0	-31	0	0
47	47	0	0	0	47	0	0	0	0	-47	0	-47	0	0
62	62	0	0	0	62	0	0	0	0	-62	0	-62	0	0
78	78	0	0	0	78	0	0	0	0	-78	0	-78	0	0
94	94	0	0	0	94	0	0	0	0	-94	0	-94	0	0
109	109	0	0	0	109	0	0	0	0	-109	0	-109	0	0
125	125	0	0	0	125	0	0	0	0	-125	0	-125	0	0
140	140	0	0	0	140	0	0	0	0	-140	0	-140	0	0
156	156	0	0	0	156	0	0	0	0	-156	0	-156	0	0
172	172	0	0	0	172	0	0	0	0	-172	0	-172	0	0
187	187	0	0	0	187	0	0	0	0	-187	0	-187	0	0
203	203	0	0	0	203	0	0	0	0	-203	0	-203	0	0
218	218	0	0	0	218	0	0	0	0	-218	0	-218	0	0
234	234	0	0	0	234	0	0	0	0	-234	0	-234	0	0
250	250	0	0	0	250	0	0	0	0	-250	0	-250	0	0
265	282	33	17	42	307	0	0	0	0	-265	-42	-307	0	0
281	315	65	34	83	364	0	0	0	0	-281	-83	-364	0	0
296	347	98	51	125	421	0	0	0	0	-296	-125	-421	0	0
312	380	130	68	167	479	0	0	0	0	-312	-167	-479	0	0
328	412	163	84	208	536	0	0	0	0	-328	-208	-536	0	0
343	445	195	101	250	593	0	0	0	0	-343	-250	-593	0	0
359	477	228	118	292	651	0	0	0	0	-359	-292	-651	0	0
374	510	260	135	333	708	0	0	0	0	-374	-333	-708	0	0
390	542	293	152	375	765	0	0	0	0	-390	-375	-765	0	0
406	575	325	169	417	822	0	0	0	0	-406	-417	-822	0	0
421	607	358	186	458	880	0	0	0	0	-421	-458	-880	0	0
437	640	390	203	500	937	0	0	0	0	-437	-500	-937	0	0

Lateral Earth Pressures for Stability Analysis of Concrete Gravity Structures per EM 1110-2-2100 - Coulomb, Mononbe-Okabe, and Wood Methods (See Assumptions For Use)

Project: HAHD FPF
Design Element: Gen. Coefficients & LEP Distributions
Date: 11/24/2021 (Appendix Edits/Updates)
USACE District/Section: CENWS-END-G
Engineer: Swenson

Design Case: Unusual - OBE (Driving Side Non-Yielding)
Factor of Safety (FS) = 1.3
Base of Wall EL (ft) = 0
Top of Wall EL (ft) = 10 — From top driving side layer EL
Total Wall Heigth (ft) = 10
Retained Wall Height (ft) = 7 — Based on top resisting side layer EL
Wall Embedment (ft) = 3

Groundwater
Unit Weight (pcf) = 62.4
EL Driving Side (ft) = 10 — Cannot be above top of wall/soil
EL Resisting Side (ft) = 7 — May be above top of soil

Surcharge
Retained Side Uniform Surcharge (psf) = 0

Seismic Parameters (if applicable)
Earthquake: OBE
Return Period (γr) = 145
PGA (g) = 0.113 — From DRAFT 2021 Periodic Assessment Report - OBE (145-γr), Site Class B (per shear wave velocity measurements at FPF excavation)
kh (g) = 0.075333333 — 2/3*PGA per EM 1110-2-2100
ψ (deg)= 4.3
Driving Side Backfill Condition (Yielding/Non-Yielding): Non-Yielding — Yielding if wall displacement/deformation during earthquake is sufficient to mobilize active wedge (top of wall movement ~0.1%-0.4% H)

	Soil Unit	Description	Layer Elevations: Driving Side Top	Driving Side Bottom	Resisting Side (account for potential erosion/removal of soil) Top	Resisting Side Bottom	Unit Weight (pcf)	Soil Strength Parameters: Friction Angle (deg) Nominal (ϕ)	Developed (ϕ_d)	Driving Side - Coulomb (Static), Mononobe-Okabe (Yielding Backfill), Wood (Non-Yielding Backfill): Slope above wall (β, degrees, positive = slopes upward away from structure)	Interface Friction Angle (δ, degrees, = β but ≥ 0)	Static K(a)	M-O Seismic Parameters (if applicable) Kae	ΔKae	Resisting Side - Coulomb (Static), Mononobe-Okabe (Yielding Backfill): Slope below wall (β, degrees, negative = slopes downward away from structure)	Interface Friction Angle (δ, degrees, = 0 for resisting side)	Static K(p)	M-O Seismic Parameters (if applicable) Kpe	ΔKpe
	1	Structural Fill	10	-100	3	-100	130	35	28.3	0	0	0.357	0.405	0.048	0	0	2.804	2.674	-0.129
	2																		
	3																		
	4																		
	5																		
	6																		
	7																		
	8																		
	9																		
	10																		
vlookup column reference:	1	2	3	4	5	6	7	8	9	10	11	12	13	14	15	16	17	18	19

Driving Side
Driving Side Resultant Seismic Surcharge Ht (H) = 0.63 — 2/3*H for yielding backfill and 0.63*H for non-yielding backfill per EM 1110-2-2100
Resultant Seismic Soil Load (ΔPe, lb/ft) = 979
Seismic Component Soil LEP top (psf) = 174
Seismic Component Soil LEP bottom (psf) = 22
Seismic Component Soil LEP slope (psf/ft) = -15.28

Driving Side

Elevation (ft)	Soil Unit	Pore Pressure (psf)	Vertical Stress (psf): Total	Effective	Design Lateral Earth and Pore Pressures: Soil Pressure (psf): Vertical + Horizontal	Horizontal	Surcharge (psf): Vertical + Horizontal	Horizontal	**Total Horizontal Static Pressure** (Pore Pressure+ Soil+Surcharge) (psf)	Soil Pressure - Seismic Component (psf): Vertical + Horizontal	Horizontal	Surcharge Pressure - Seismic Component (psf): Vertical + Horizontal	Horizontal	Horizontal: Soil+Surcharge Pressure - Seismic Component (psf)	Incremental Soil+Surcharge Load - Seismic Component (ΔPei, lb/ft)	Redistributed Soil+Surcharge Pressure - Seismic Component (psf)	**Total Horizontal Seismic Pressure** (Pore Pressure+Static (Soil+Surcharge) +Seismic (Soil+Surcharge)) (psf)	Soil Unit
10.0	1	0	0	0	0	0	0	0	0	98	98	0	0	98	0	174	174	0
9.75	1	16	33	17	6	6	0	0	22	98	98	0	0	98	24	171	192	0
9.50	1	31	65	34	12	12	0	0	43	98	98	0	0	98	24	167	210	0
9.25	1	47	98	51	18	18	0	0	65	98	98	0	0	98	24	163	228	0
9.00	1	62	130	68	24	24	0	0	87	98	98	0	0	98	24	159	246	0
8.75	1	78	163	85	30	30	0	0	108	98	98	0	0	98	24	155	263	0
8.50	1	94	195	101	36	36	0	0	130	98	98	0	0	98	24	151	281	0
8.25	1	109	228	118	42	42	0	0	151	98	98	0	0	98	24	148	299	0
8.00	1	125	260	135	48	48	0	0	173	98	98	0	0	98	24	144	317	0
7.75	1	140	293	152	54	54	0	0	195	98	98	0	0	98	24	140	335	0
7.50	1	156	325	169	60	60	0	0	216	98	98	0	0	98	24	136	352	0
7.25	1	172	358	186	66	66	0	0	238	98	98	0	0	98	24	132	370	0
7.00	1	187	390	203	72	72	0	0	260	98	98	0	0	98	24	128	388	0
6.75	1	203	423	220	78	78	0	0	281	98	98	0	0	98	24	125	406	0
6.50	1	218	455	237	84	84	0	0	303	98	98	0	0	98	24	121	424	0
6.25	1	234	488	254	90	90	0	0	324	98	98	0	0	98	24	117	441	0
6.00	1	250	520	270	96	96	0	0	346	98	98	0	0	98	24	113	459	0
5.75	1	265	553	287	102	102	0	0	368	98	98	0	0	98	24	109	477	0
5.50	1	281	585	304	108	108	0	0	389	98	98	0	0	98	24	106	495	0
5.25	1	296	618	321	115	115	0	0	411	98	98	0	0	98	24	102	513	0
5.00	1	312	650	338	121	121	0	0	433	98	98	0	0	98	24	98	530	0
4.75	1	328	683	355	127	127	0	0	454	98	98	0	0	98	24	94	548	0
4.50	1	343	715	372	133	133	0	0	476	98	98	0	0	98	24	90	566	0
4.25	1	359	748	389	139	139	0	0	497	98	98	0	0	98	24	86	584	0
4.00	1	374	780	406	145	145	0	0	519	98	98	0	0	98	24	83	602	0
3.75	1	390	813	423	151	151	0	0	541	98	98	0	0	98	24	79	620	0
3.50	1	406	845	439	157	157	0	0	562	98	98	0	0	98	24	75	637	0
3.25	1	421	878	456	163	163	0	0	584	98	98	0	0	98	24	71	655	0
3.01	1	436	909	473	169	169	0	0	605	98	98	0	0	98	24	68	672	0
3.00	1	437	910	473	169	169	0	0	606	98	98	0	0	98	1	67	673	1
2.75	1	452	943	490	175	175	0	0	627	98	98	0	0	98	24	64	691	1
2.50	1	468	975	507	181	181	0	0	649	98	98	0	0	98	24	60	709	1
2.25	1	484	1,008	524	187	187	0	0	670	98	98	0	0	98	24	56	726	1
2.00	1	499	1,040	541	193	193	0	0	692	98	98	0	0	98	24	52	744	1
1.75	1	515	1,073	558	199	199	0	0	714	98	98	0	0	98	24	48	762	1
1.50	1	530	1,105	575	205	205	0	0	735	98	98	0	0	98	24	44	780	1
1.25	1	546	1,138	592	211	211	0	0	757	98	98	0	0	98	24	41	798	1
1.00	1	562	1,170	608	217	217	0	0	779	98	98	0	0	98	24	37	815	1
0.75	1	577	1,203	625	223	223	0	0	800	98	98	0	0	98	24	33	833	1
0.50	1	593	1,235	642	229	229	0	0	822	98	98	0	0	98	24	29	851	1
0.25	1	608	1,268	659	235	235	0	0	843	98	98	0	0	98	24	25	869	1
0.00	1	624	1,300	676	241	241	0	0	865	98	98	0	0	98	24	22	887	1

Plot Info		
	GSEL	X
Driving Side	10.0	0
	10.0	865
Resisting Side	3	0
	3	-1,005
Wall Top	10	0
Wall Bottom	0	0

Resisting Side

Resisting Side Resultant Seismic Surcharge Ht (H) = 0.67 — 2/3*H for yielding backfill per EM 1110-2-2100
Resultant Seismic Soil Load (ΔPpe, lb/ft) = -76
Seismic Component Soil LEP top (psf) = -50
Seismic Component Soil LEP bottom (psf) = 0
Seismic Component Soil LEP slope (psf/ft) = 16.82

Resisting Side

	Vertical Stress (psf)			Design Lateral Earth and Water/Pore Pressures - All Pressures Horizontal (δ = 0)						Resisting Side Plots - (negative of calculated values for plotting)				
Water/Pore Pressure (psf)	Total	Based on Total Soil Weight only for M-O, in case submerged	Effective	Soil (psf)	**Total Static Pressure** (Water/Pore Pressure+ Soil) (psf)	Soil Pressure - Seismic Component (psf)	Incremental Soil Load - Seismic Component (ΔPpei, lb/ft)	Redistributed Soil Pressure - Seismic Component (psf)	**Total Seismic Pressure** (Pore Pressure+Static Soil+Seismic Soil) (psf) [***does **not** include hydrodynamic pressure of free water above soil***]	Water/Pore Pressure (psf)	Soil (psf)	**Total Static Pressure** (Water/Pore Pressure+ Soil) (psf)	Redistributed Soil Pressure - Seismic Component (psf)	**Total Seismic Pressure** (Pore Pressure+Static Soil+Seismic Soil) (psf) [***does **not** include hydrodynamic pressure of free water above soil***]
0	0	0	0	0	0	0	0	0	0	0	0	0	0	0
0	0	0	0	0	0	0	0	0	0	0	0	0	0	0
0	0	0	0	0	0	0	0	0	0	0	0	0	0	0
0	0	0	0	0	0	0	0	0	0	0	0	0	0	0
0	0	0	0	0	0	0	0	0	0	0	0	0	0	0
0	0	0	0	0	0	0	0	0	0	0	0	0	0	0
0	0	0	0	0	0	0	0	0	0	0	0	0	0	0
0	0	0	0	0	0	0	0	0	0	0	0	0	0	0
0	0	0	0	0	0	0	0	0	0	0	0	0	0	0
0	0	0	0	0	0	0	0	0	0	0	0	0	0	0
0	0	0	0	0	0	0	0	0	0	0	0	0	0	0
16	16	0	0	0	16	0	0	0	16	-16	0	-16	0	-16
31	31	0	0	0	31	0	0	0	31	-31	0	-31	0	-31
47	47	0	0	0	47	0	0	0	47	-47	0	-47	0	-47
62	62	0	0	0	62	0	0	0	62	-62	0	-62	0	-62
78	78	0	0	0	78	0	0	0	78	-78	0	-78	0	-78
94	94	0	0	0	94	0	0	0	94	-94	0	-94	0	-94
109	109	0	0	0	109	0	0	0	109	-109	0	-109	0	-109
125	125	0	0	0	125	0	0	0	125	-125	0	-125	0	-125
140	140	0	0	0	140	0	0	0	140	-140	0	-140	0	-140
156	156	0	0	0	156	0	0	0	156	-156	0	-156	0	-156
172	172	0	0	0	172	0	0	0	172	-172	0	-172	0	-172
187	187	0	0	0	187	0	0	0	187	-187	0	-187	0	-187
203	203	0	0	0	203	0	0	0	203	-203	0	-203	0	-203
218	218	0	0	0	218	0	0	0	218	-218	0	-218	0	-218
234	234	0	0	0	234	0	0	0	234	-234	0	-234	0	-234
249	249	0	0	0	249	0	0	0	249	-249	0	-249	0	-249
250	250	0	0	0	250	0	0	-50	199	-250	0	-250	50	-199
265	282	33	17	47	313	-4	-1	-46	266	-265	-47	-313	46	-266
281	315	65	34	95	376	-8	-2	-42	334	-281	-95	-376	42	-334
296	347	98	51	142	439	-13	-3	-38	401	-296	-142	-439	38	-401
312	380	130	68	190	502	-17	-4	-34	468	-312	-190	-502	34	-468
328	412	163	84	237	565	-21	-5	-29	535	-328	-237	-565	29	-535
343	445	195	101	284	628	-25	-6	-25	602	-343	-284	-628	25	-602
359	477	228	118	332	690	-29	-7	-21	669	-359	-332	-690	21	-669
374	510	260	135	379	753	-34	-8	-17	737	-374	-379	-753	17	-737
390	542	293	152	426	816	-38	-9	-13	804	-390	-426	-816	13	-804
406	575	325	169	474	879	-42	-10	-8	871	-406	-474	-879	8	-871
421	607	358	186	521	942	-46	-11	-4	938	-421	-521	-942	4	-938
437	640	390	203	569	1,005	-50	-12	0	1,005	-437	-569	-1,005	0	-1,005

Lateral Earth Pressures for Stability Analysis of Concrete Gravity Structures per EM 1110-2-2100 - Coulomb, Mononbe-Okabe, and Wood Methods (See Assumptions For Use)

Project: HAHD FPF
Design Element: Gen. Coefficients & LEP Distributions
Date: 11/24/2021 (Appendix Edits/Updates)
USACE District/Section: CENWS-END-G
Engineer: Swenson

Design Case: Unusual - OBE (Driving Side Yielding)
Factor of Safety (FS) = 1.3
Base of Wall EL (ft) = 0
Top of Wall EL (ft) = 10 — From top driving side layer EL
Total Wall Heigth (ft) = 10
Retained Wall Height (ft) = 7 — Based on top resisting side layer EL
Wall Embedment (ft) = 3

Groundwater
Unit Weight (pcf) = 62.4
EL Driving Side (ft) = 10 — Cannot be above top of wall/soil
EL Resisting Side (ft) = 7 — May be above top of soil

Surcharge
Retained Side Uniform Surcharge (psf) = 0

Seismic Parameters (if applicable)
Earthquake: OBE
Return Period (γr) = 145
PGA (g) = 0.113 — From DRAFT 2021 Periodic Assessment Report - OBE (145-γr), Site Class B (per shear wave velocity measurements at FPF excavation)
kh (g) = 0.075333333 — 2/3*PGA per EM 1110-2-2100
ψ (deg)= 4.3
Driving Side Backfill Condition (Yielding/Non-Yielding): Yielding — Yielding if wall displacement/deformation during earthquake is sufficient to mobilize active wedge (top of wall movement ~0.1%-0.4% H)

			Layer Elevations					Soil Strength Parameters		Driving Side - Coulomb (Static), Mononobe-Okabe (Yielding Backfill), Wood (Non-Yielding Backfill)					Resisting Side - Coulomb (Static), Mononobe-Okabe (Yielding Backfill)				
			Driving Side		Resisting Side (account for potential erosion/removal of soil)			Friction Angle (deg)		Slope above wall (β, degrees, positive = slopes upward away from structure)	Interface Friction Angle (δ, degrees, = β but ≥ 0)	Static	M-O Seismic Parameters (if applicable)		Slope below wall (β, degrees, negative = slopes downward away from structure)	Interface Friction Angle (δ, degrees, = 0 for resisting side)	Static	M-O Seismic Parameters (if applicable)	
	Soil Unit	Description	Top	Bottom	Top	Bottom	Unit Weight (pcf)	Nominal (ϕ)	Developed (ϕ_d)			K(a)	Kae	ΔKae			K(p)	Kpe	ΔKpe
	1	Structural Fill	10	-100	3	-100	130	35	28.3	0	0	0.357	0.405	0.048	0	0	2.804	2.674	-0.129
	2																		
	3																		
	4																		
	5																		
	6																		
	7																		
	8																		
	9																		
	10																		
vlookup column reference:	1	2	3	4	5	6	7	8	9	10	11	12	13	14	15	16	17	18	19

Driving Side
Driving Side Resultant Seismic Surcharge Ht (H) = 0.67 — 2/3*H for yielding backfill and 0.63*H for non-yielding backfill per EM 1110-2-2100
Resultant Seismic Soil Load (ΔPe, lb/ft) = 313
Seismic Component Soil LEP top (psf) = 63
Seismic Component Soil LEP bottom (psf) = 0
Seismic Component Soil LEP slope (psf/ft) = -6.27

Driving Side

Elevation (ft)	Soil Unit	Pore Pressure (psf)	Vertical Stress (psf)		Design Lateral Earth and Pore Pressures													Soil Unit
					Soil Pressure (psf)		Surcharge (psf)		**Total Horizontal Static Pressure** (Pore Pressure+ Soil+Surcharge) (psf)	Soil Pressure - Seismic Component (psf)		Surcharge Pressure - Seismic Component (psf)		Horizontal			**Total Horizontal Seismic Pressure** (Pore Pressure+Static (Soil+Surcharge) +Seismic (Soil+Surcharge)) (psf)	
			Total	Effective	Vertical + Horizontal	Horizontal	Vertical + Horizontal	Horizontal		Vertical + Horizontal	Horizontal	Vertical + Horizontal	Horizontal	Soil+Surcharge Pressure - Seismic Component (psf)	Incremental Soil+Surcharge Load - Seismic Component (ΔPei, lb/ft)	Redistributed Soil+Surcharge Pressure - Seismic Component (psf)		
10.0	1	0	0	0	0	0	0	0	0	0	0	0	0	0	0	63	63	0
9.75	1	16	33	17	6	6	0	0	22	2	2	0	0	2	0	61	83	0
9.50	1	31	65	34	12	12	0	0	43	3	3	0	0	3	1	60	103	0
9.25	1	47	98	51	18	18	0	0	65	5	5	0	0	5	1	58	123	0
9.00	1	62	130	68	24	24	0	0	87	6	6	0	0	6	1	56	143	0
8.75	1	78	163	85	30	30	0	0	108	8	8	0	0	8	2	55	163	0
8.50	1	94	195	101	36	36	0	0	130	9	9	0	0	9	2	53	183	0
8.25	1	109	228	118	42	42	0	0	151	11	11	0	0	11	3	52	203	0
8.00	1	125	260	135	48	48	0	0	173	13	13	0	0	13	3	50	223	0
7.75	1	140	293	152	54	54	0	0	195	14	14	0	0	14	3	49	243	0
7.50	1	156	325	169	60	60	0	0	216	16	16	0	0	16	4	47	263	0
7.25	1	172	358	186	66	66	0	0	238	17	17	0	0	17	4	45	283	0
7.00	1	187	390	203	72	72	0	0	260	19	19	0	0	19	5	44	303	0
6.75	1	203	423	220	78	78	0	0	281	20	20	0	0	20	5	42	323	0
6.50	1	218	455	237	84	84	0	0	303	22	22	0	0	22	5	41	344	0
6.25	1	234	488	254	90	90	0	0	324	24	24	0	0	24	6	39	364	0
6.00	1	250	520	270	96	96	0	0	346	25	25	0	0	25	6	38	384	0
5.75	1	265	553	287	102	102	0	0	368	27	27	0	0	27	6	36	404	0
5.50	1	281	585	304	108	108	0	0	389	28	28	0	0	28	7	34	424	0
5.25	1	296	618	321	115	115	0	0	411	30	30	0	0	30	7	33	444	0
5.00	1	312	650	338	121	121	0	0	433	31	31	0	0	31	8	31	464	0
4.75	1	328	683	355	127	127	0	0	454	33	33	0	0	33	8	30	484	0
4.50	1	343	715	372	133	133	0	0	476	34	34	0	0	34	8	28	504	0
4.25	1	359	748	389	139	139	0	0	497	36	36	0	0	36	9	27	524	0
4.00	1	374	780	406	145	145	0	0	519	38	38	0	0	38	9	25	544	0
3.75	1	390	813	423	151	151	0	0	541	39	39	0	0	39	10	24	564	0
3.50	1	406	845	439	157	157	0	0	562	41	41	0	0	41	10	22	584	0
3.25	1	421	878	456	163	163	0	0	584	42	42	0	0	42	10	20	604	0
3.01	1	436	909	473	169	169	0	0	605	44	44	0	0	44	10	19	624	0
3.00	1	437	910	473	169	169	0	0	606	44	44	0	0	44	0	19	624	1
2.75	1	452	943	490	175	175	0	0	627	45	45	0	0	45	11	17	644	1
2.50	1	468	975	507	181	181	0	0	649	47	47	0	0	47	12	16	664	1
2.25	1	484	1,008	524	187	187	0	0	670	49	49	0	0	49	12	14	685	1
2.00	1	499	1,040	541	193	193	0	0	692	50	50	0	0	50	12	13	705	1
1.75	1	515	1,073	558	199	199	0	0	714	52	52	0	0	52	13	11	725	1
1.50	1	530	1,105	575	205	205	0	0	735	53	53	0	0	53	13	9	745	1
1.25	1	546	1,138	592	211	211	0	0	757	55	55	0	0	55	14	8	765	1
1.00	1	562	1,170	608	217	217	0	0	779	56	56	0	0	56	14	6	785	1
0.75	1	577	1,203	625	223	223	0	0	800	58	58	0	0	58	14	5	805	1
0.50	1	593	1,235	642	229	229	0	0	822	60	60	0	0	60	15	3	825	1
0.25	1	608	1,268	659	235	235	0	0	843	61	61	0	0	61	15	2	845	1
0.00	1	624	1,300	676	241	241	0	0	865	63	63	0	0	63	15	0	865	1

Plot Info		
	GSEL	X
Driving Side	10.0	0
	10.0	865
Resisting Side	3	0
	3	-1,005
Wall Top	10	0
Wall Bottom	0	0

Resisting Side

Resisting Side Resultant Seismic Surcharge Ht (H) = 0.67 — 2/3*H for yielding backfill per EM 1110-2-2100
Resultant Seismic Soil Load (ΔPpe, lb/ft) = -76
Seismic Component Soil LEP top (psf) = -50
Seismic Component Soil LEP bottom (psf) = 0
Seismic Component Soil LEP slope (psf/ft) = 16.82

Resisting Side

	Vertical Stress (psf)			Design Lateral Earth and Water/Pore Pressures - All Pressures Horizontal (δ = 0)						Resisting Side Plots - (negative of calculated values for plotting)				
Water/Pore Pressure (psf)	Total	Based on Total Soil Weight only for M-O, in case submerged	Effective	Soil (psf)	**Total Static Pressure** (Water/Pore Pressure+ Soil) (psf)	Soil Pressure - Seismic Component (psf)	Incremental Soil Load - Seismic Component (ΔPpei, lb/ft)	Redistributed Soil Pressure - Seismic Component (psf)	**Total Seismic Pressure** (Pore Pressure+Static Soil+Seismic Soil) (psf) [***does **not** include hydrodynamic pressure of free water above soil***]	Water/Pore Pressure (psf)	Soil (psf)	**Total Static Pressure** (Water/Pore Pressure+ Soil) (psf)	Redistributed Soil Pressure - Seismic Component (psf)	**Total Seismic Pressure** (Pore Pressure+Static Soil+Seismic Soil) (psf) [***does **not** include hydrodynamic pressure of free water above soil***]
0	0	0	0	0	0	0	0	0	0	0	0	0	0	0
0	0	0	0	0	0	0	0	0	0	0	0	0	0	0
0	0	0	0	0	0	0	0	0	0	0	0	0	0	0
0	0	0	0	0	0	0	0	0	0	0	0	0	0	0
0	0	0	0	0	0	0	0	0	0	0	0	0	0	0
0	0	0	0	0	0	0	0	0	0	0	0	0	0	0
0	0	0	0	0	0	0	0	0	0	0	0	0	0	0
0	0	0	0	0	0	0	0	0	0	0	0	0	0	0
0	0	0	0	0	0	0	0	0	0	0	0	0	0	0
0	0	0	0	0	0	0	0	0	0	0	0	0	0	0
0	0	0	0	0	0	0	0	0	0	0	0	0	0	0
16	16	0	0	0	16	0	0	0	16	-16	0	-16	0	-16
31	31	0	0	0	31	0	0	0	31	-31	0	-31	0	-31
47	47	0	0	0	47	0	0	0	47	-47	0	-47	0	-47
62	62	0	0	0	62	0	0	0	62	-62	0	-62	0	-62
78	78	0	0	0	78	0	0	0	78	-78	0	-78	0	-78
94	94	0	0	0	94	0	0	0	94	-94	0	-94	0	-94
109	109	0	0	0	109	0	0	0	109	-109	0	-109	0	-109
125	125	0	0	0	125	0	0	0	125	-125	0	-125	0	-125
140	140	0	0	0	140	0	0	0	140	-140	0	-140	0	-140
156	156	0	0	0	156	0	0	0	156	-156	0	-156	0	-156
172	172	0	0	0	172	0	0	0	172	-172	0	-172	0	-172
187	187	0	0	0	187	0	0	0	187	-187	0	-187	0	-187
203	203	0	0	0	203	0	0	0	203	-203	0	-203	0	-203
218	218	0	0	0	218	0	0	0	218	-218	0	-218	0	-218
234	234	0	0	0	234	0	0	0	234	-234	0	-234	0	-234
249	249	0	0	0	249	0	0	0	249	-249	0	-249	0	-249
250	250	0	0	0	250	0	0	-50	199	-250	0	-250	50	-199
265	282	33	17	47	313	-4	-1	-46	266	-265	-47	-313	46	-266
281	315	65	34	95	376	-8	-2	-42	334	-281	-95	-376	42	-334
296	347	98	51	142	439	-13	-3	-38	401	-296	-142	-439	38	-401
312	380	130	68	190	502	-17	-4	-34	468	-312	-190	-502	34	-468
328	412	163	84	237	565	-21	-5	-29	535	-328	-237	-565	29	-535
343	445	195	101	284	628	-25	-6	-25	602	-343	-284	-628	25	-602
359	477	228	118	332	690	-29	-7	-21	669	-359	-332	-690	21	-669
374	510	260	135	379	753	-34	-8	-17	737	-374	-379	-753	17	-737
390	542	293	152	426	816	-38	-9	-13	804	-390	-426	-816	13	-804
406	575	325	169	474	879	-42	-10	-8	871	-406	-474	-879	8	-871
421	607	358	186	521	942	-46	-11	-4	938	-421	-521	-942	4	-938
437	640	390	203	569	1,005	-50	-12	0	1,005	-437	-569	-1,005	0	-1,005

Lateral Earth Pressures for Stability Analysis of Concrete Gravity Structures per EM 1110-2-2100 - Coulomb, Mononobe-Okabe, and Wood Methods (See Assumptions For Use)

Project: HAHD FPF
Design Element: Gen. Coefficients & LEP Distributions
Date: 11/24/2021 (Appendix Edits/Updates)
USACE District/Section: CENWS-END-G
Engineer: Swenson

Design Case: Extreme - MDE (Driving Side Non-Yielding)
Factor of Safety (FS) = 1.1
Base of Wall EL (ft) = 0
Top of Wall EL (ft) = 10 — From top driving side layer EL
Total Wall Heigth (ft) = 10
Retained Wall Height (ft) = 7 — Based on top resisting side layer EL
Wall Embedment (ft) = 3

Groundwater
Unit Weight (pcf) = 62.4
EL Driving Side (ft) = 10 — Cannot be above top of wall/soil
EL Resisting Side (ft) = 7 — May be above top of soil

Surcharge
Retained Side Uniform Surcharge (psf) = 0

Seismic Parameters (if applicable)
Earthquake: MDE
Return Period (γr) = 950
PGA (g) = 0.294 — From DRAFT 2021 Periodic Assessment Report - MDE (950-yr), Site Class B (per shear wave velocity measurements at FPF excavation)
kh (g) = 0.196 — 2/3*PGA per EM 1110-2-2100
ψ (deg)= 11.1
Driving Side Backfill Condition (Yielding/Non-Yielding): Non-Yielding — Yielding if wall displacement/deformation during earthquake is sufficient to mobilize active wedge (top of wall movement ~0.1%-0.4% H)

Soil Unit	Description	Layer Elevations: Driving Side Top	Driving Side Bottom	Resisting Side (account for potential erosion/removal of soil) Top	Resisting Side Bottom	Unit Weight (pcf)	Soil Strength Parameters: Friction Angle (deg) Nominal (ϕ)	Developed (ϕ_d)	Driving Side - Coulomb (Static), Mononobe-Okabe (Yielding Backfill), Wood (Non-Yielding Backfill): Slope above wall (β, degrees, positive = slopes upward away from structure)	Interface Friction Angle (δ, degrees, = β but ≥ 0)	Static K(a)	M-O Seismic Parameters (if applicable) Kae	ΔKae	Resisting Side - Coulomb (Static), Mononobe-Okabe (Yielding Backfill): Slope below wall (β, degrees, negative = slopes downward away from structure)	Interface Friction Angle (δ, degrees, = 0 for resisting side)	Static K(p)	M-O Seismic Parameters (if applicable) Kpe	ΔKpe
1	Structural Fill	10	-100	3	-100	130	35	32.5	0	0	0.301	0.430	0.129	0	0	3.320	2.941	-0.378
2																		
3																		
4																		
5																		
6																		
7																		
8																		
9																		
10																		
vlookup column reference:		1	2	3	4	5	6	7	8	9	10	11	12	13	14	15	16	17	18	19

Driving Side
Driving Side Resultant Seismic Surcharge Ht (H) = 0.63 — 2/3*H for yielding backfill and 0.63*H for non-yielding backfill per EM 1110-2-2100
Resultant Seismic Soil Load (ΔPe, lb/ft) = 2,548
Seismic Component Soil LEP top (psf) = 454
Seismic Component Soil LEP bottom (psf) = 56
Seismic Component Soil LEP slope (psf/ft) = -39.75

Driving Side

Elevation (ft)	Soil Unit	Pore Pressure (psf)	Vertical Stress (psf): Total	Effective	Design Lateral Earth and Pore Pressures: Soil Pressure (psf): Vertical + Horizontal	Horizontal	Surcharge (psf): Vertical + Horizontal	Horizontal	**Total Horizontal Static Pressure** (Pore Pressure+ Soil+Surcharge) (psf)	Soil Pressure - Seismic Component (psf): Vertical + Horizontal	Horizontal	Surcharge Pressure - Seismic Component (psf): Vertical + Horizontal	Horizontal	Horizontal: Soil+Surcharge Pressure - Seismic Component (psf)	Incremental Soil+Surcharge Load - Seismic Component (ΔPei, lb/ft)	Redistributed Soil+Surcharge Pressure - Seismic Component (psf)	**Total Horizontal Seismic Pressure** (Pore Pressure+Static (Soil+Surcharge) +Seismic (Soil+Surcharge)) (psf)	Soil Unit
10.0	1	0	0	0	0	0	0	0	0	255	255	0	0	255	0	454	454	0
9.75	1	16	33	17	5	5	0	0	21	255	255	0	0	255	0	444	464	0
9.50	1	31	65	34	10	10	0	0	41	255	255	0	0	255	64	434	475	0
9.25	1	47	98	51	15	15	0	0	62	255	255	0	0	255	64	424	486	0
9.00	1	62	130	68	20	20	0	0	83	255	255	0	0	255	64	414	497	0
8.75	1	78	163	85	25	25	0	0	103	255	255	0	0	255	64	404	507	0
8.50	1	94	195	101	31	31	0	0	124	255	255	0	0	255	64	394	518	0
8.25	1	109	228	118	36	36	0	0	145	255	255	0	0	255	64	384	529	0
8.00	1	125	260	135	41	41	0	0	166	255	255	0	0	255	64	374	540	0
7.75	1	140	293	152	46	46	0	0	186	255	255	0	0	255	64	364	550	0
7.50	1	156	325	169	51	51	0	0	207	255	255	0	0	255	64	354	561	0
7.25	1	172	358	186	56	56	0	0	228	255	255	0	0	255	64	344	572	0
7.00	1	187	390	203	61	61	0	0	248	255	255	0	0	255	64	334	583	0
6.75	1	203	423	220	66	66	0	0	269	255	255	0	0	255	64	324	593	0
6.50	1	218	455	237	71	71	0	0	290	255	255	0	0	255	64	314	604	0
6.25	1	234	488	254	76	76	0	0	310	255	255	0	0	255	64	304	615	0
6.00	1	250	520	270	81	81	0	0	331	255	255	0	0	255	64	295	626	0
5.75	1	265	553	287	87	87	0	0	352	255	255	0	0	255	64	285	636	0
5.50	1	281	585	304	92	92	0	0	372	255	255	0	0	255	64	275	647	0
5.25	1	296	618	321	97	97	0	0	393	255	255	0	0	255	64	265	658	0
5.00	1	312	650	338	102	102	0	0	414	255	255	0	0	255	64	255	669	0
4.75	1	328	683	355	107	107	0	0	435	255	255	0	0	255	64	245	679	0
4.50	1	343	715	372	112	112	0	0	455	255	255	0	0	255	64	235	690	0
4.25	1	359	748	389	117	117	0	0	476	255	255	0	0	255	64	225	701	0
4.00	1	374	780	406	122	122	0	0	497	255	255	0	0	255	64	215	712	0
3.75	1	390	813	423	127	127	0	0	517	255	255	0	0	255	64	205	722	0
3.50	1	406	845	439	132	132	0	0	538	255	255	0	0	255	64	195	733	0
3.25	1	421	878	456	137	137	0	0	559	255	255	0	0	255	64	185	744	0
3.01	1	436	909	473	142	142	0	0	579	255	255	0	0	255	61	176	754	0
3.00	1	437	910	473	143	143	0	0	579	255	255	0	0	255	3	175	755	1
2.75	1	452	943	490	148	148	0	0	600	255	255	0	0	255	64	165	765	1
2.50	1	468	975	507	153	153	0	0	621	255	255	0	0	255	64	155	776	1
2.25	1	484	1,008	524	158	158	0	0	641	255	255	0	0	255	64	145	787	1
2.00	1	499	1,040	541	163	163	0	0	662	255	255	0	0	255	64	136	798	1
1.75	1	515	1,073	558	168	168	0	0	683	255	255	0	0	255	64	126	808	1
1.50	1	530	1,105	575	173	173	0	0	703	255	255	0	0	255	64	116	819	1
1.25	1	546	1,138	592	178	178	0	0	724	255	255	0	0	255	64	106	830	1
1.00	1	562	1,170	608	183	183	0	0	745	255	255	0	0	255	64	96	841	1
0.75	1	577	1,203	625	188	188	0	0	766	255	255	0	0	255	64	86	851	1
0.50	1	593	1,235	642	193	193	0	0	786	255	255	0	0	255	64	76	862	1
0.25	1	608	1,268	659	199	199	0	0	807	255	255	0	0	255	64	66	873	1
0.00	1	624	1,300	676	204	204	0	0	828	255	255	0	0	255	64	56	884	1

Plot Info		
	GSEL	X
Driving Side	10.0	0
	10.0	828
Resisting Side	3	0
	3	-1,110
Wall Top	10	0
Wall Bottom	0	0

Resisting Side

Resisting Side Resultant Seismic Surcharge Ht (H) = 0.67 — 2/3*H for yielding backfill per EM 1110-2-2100
Resultant Seismic Soil Load (ΔPpe, lb/ft) = -221
Seismic Component Soil LEP top (psf) = -148
Seismic Component Soil LEP bottom (psf) = 0
Seismic Component Soil LEP slope (psf/ft) = 49.19

Resisting Side

	Vertical Stress (psf)			Design Lateral Earth and Water/Pore Pressures - All Pressures Horizontal (δ = 0)						Resisting Side Plots - (negative of calculated values for plotting)				
Water/Pore Pressure (psf)	Total	Based on Total Soil Weight only for M-O, in case submerged	Effective	Soil (psf)	**Total Static Pressure** (Water/Pore Pressure+ Soil) (psf)	Soil Pressure - Seismic Component (psf)	Incremental Soil Load - Seismic Component (ΔPpei, lb/ft)	Redistributed Soil Pressure - Seismic Component (psf)	**Total Seismic Pressure** (Pore Pressure+Static Soil+Seismic Soil) (psf) [***does **not** include hydrodynamic pressure of free water above soil***]	Water/Pore Pressure (psf)	Soil (psf)	**Total Static Pressure** (Water/Pore Pressure+ Soil) (psf)	Redistributed Soil Pressure - Seismic Component (psf)	**Total Seismic Pressure** (Pore Pressure+Static Soil+Seismic Soil) (psf) [***does **not** include hydrodynamic pressure of free water above soil***]
0	0	0	0	0	0	0	0	0	0	0	0	0	0	0
0	0	0	0	0	0	0	0	0	0	0	0	0	0	0
0	0	0	0	0	0	0	0	0	0	0	0	0	0	0
0	0	0	0	0	0	0	0	0	0	0	0	0	0	0
0	0	0	0	0	0	0	0	0	0	0	0	0	0	0
0	0	0	0	0	0	0	0	0	0	0	0	0	0	0
0	0	0	0	0	0	0	0	0	0	0	0	0	0	0
0	0	0	0	0	0	0	0	0	0	0	0	0	0	0
0	0	0	0	0	0	0	0	0	0	0	0	0	0	0
0	0	0	0	0	0	0	0	0	0	0	0	0	0	0
0	0	0	0	0	0	0	0	0	0	0	0	0	0	0
16	16	0	0	0	16	0	0	0	16	-16	0	-16	0	-16
31	31	0	0	0	31	0	0	0	31	-31	0	-31	0	-31
47	47	0	0	0	47	0	0	0	47	-47	0	-47	0	-47
62	62	0	0	0	62	0	0	0	62	-62	0	-62	0	-62
78	78	0	0	0	78	0	0	0	78	-78	0	-78	0	-78
94	94	0	0	0	94	0	0	0	94	-94	0	-94	0	-94
109	109	0	0	0	109	0	0	0	109	-109	0	-109	0	-109
125	125	0	0	0	125	0	0	0	125	-125	0	-125	0	-125
140	140	0	0	0	140	0	0	0	140	-140	0	-140	0	-140
156	156	0	0	0	156	0	0	0	156	-156	0	-156	0	-156
172	172	0	0	0	172	0	0	0	172	-172	0	-172	0	-172
187	187	0	0	0	187	0	0	0	187	-187	0	-187	0	-187
203	203	0	0	0	203	0	0	0	203	-203	0	-203	0	-203
218	218	0	0	0	218	0	0	0	218	-218	0	-218	0	-218
234	234	0	0	0	234	0	0	0	234	-234	0	-234	0	-234
249	249	0	0	0	249	0	0	0	249	-249	0	-249	0	-249
250	250	0	0	0	250	0	0	-148	102	-250	0	-250	148	-102
265	282	33	17	56	321	-12	-2	-135	186	-265	-56	-321	135	-186
281	315	65	34	112	393	-25	-5	-123	270	-281	-112	-393	123	-270
296	347	98	51	168	465	-37	-8	-111	354	-296	-168	-465	111	-354
312	380	130	68	224	536	-49	-11	-98	438	-312	-224	-536	98	-438
328	412	163	84	281	608	-61	-14	-86	522	-328	-281	-608	86	-522
343	445	195	101	337	680	-74	-17	-74	606	-343	-337	-680	74	-606
359	477	228	118	393	752	-86	-20	-61	690	-359	-393	-752	61	-690
374	510	260	135	449	823	-98	-23	-49	774	-374	-449	-823	49	-774
390	542	293	152	505	895	-111	-26	-37	858	-390	-505	-895	37	-858
406	575	325	169	561	967	-123	-29	-25	942	-406	-561	-967	25	-942
421	607	358	186	617	1,038	-135	-32	-12	1,026	-421	-617	-1,038	12	-1,026
437	640	390	203	673	1,110	-148	-35	0	1,110	-437	-673	-1,110	0	-1,110

Lateral Earth Pressures for Stability Analysis of Concrete Gravity Structures per EM 1110-2-2100 - Coulomb, Mononobe-Okabe, and Wood Methods (See Assumptions For Use)

Project: HAHD FPF
Design Element: Gen. Coefficients & LEP Distributions
Date: 11/24/2021 (Appendix Edits/Updates)
USACE District/Section: CENWS-END-G
Engineer: Swenson

Design Case: Extreme - MDE (Driving Side Yielding)
Factor of Safety (FS) = 1.1
Base of Wall EL (ft) = 0
Top of Wall EL (ft) = 10 — From top driving side layer EL
Total Wall Heigth (ft) = 10
Retained Wall Height (ft) = 7 — Based on top resisting side layer EL
Wall Embedment (ft) = 3

Groundwater
Unit Weight (pcf) = 62.4
EL Driving Side (ft) = 10 — Cannot be above top of wall/soil
EL Resisting Side (ft) = 7 — May be above top of soil

Surcharge
Retained Side Uniform Surcharge (psf) = 0

Seismic Parameters (if applicable)
Earthquake: MDE
Return Period (yr) = 950
PGA (g) = 0.294 — From DRAFT 2021 Periodic Assessment Report - MDE (950-yr), Site Class B (per shear wave velocity measurements at FPF excavation)
kh (g) = 0.196 — 2/3*PGA per EM 1110-2-2100
ψ (deg)= 11.1
Driving Side Backfill Condition (Yielding/Non-Yielding): Yielding — Yielding if wall displacement/deformation during earthquake is sufficient to mobilize active wedge (top of wall movement ~0.1%-0.4% H)

			Layer Elevations					Soil Strength Parameters		Driving Side - Coulomb (Static), Mononobe-Okabe (Yielding Backfill), Wood (Non-Yielding Backfill)					Resisting Side - Coulomb (Static), Mononobe-Okabe (Yielding Backfill)				
			Driving Side		Resisting Side (account for potential erosion/removal of soil)			Friction Angle (deg)		Slope above wall (β, degrees, positive = slopes upward away from structure)	Interface Friction Angle (δ, degrees, = β but ≥ 0)	Static	M-O Seismic Parameters (if applicable)		Slope below wall (β, degrees, negative = slopes downward away from structure)	Interface Friction Angle (δ, degrees, = 0 for resisting side)	Static	M-O Seismic Parameters (if applicable)	
	Soil Unit	Description	Top	Bottom	Top	Bottom	Unit Weight (pcf)	Nominal (ϕ)	Developed (ϕ_d)			K(a)	Kae	ΔKae			K(p)	Kpe	ΔKpe
	1	Structural Fill	10	-100	3	-100	130	35	32.5	0	0	0.301	0.430	0.129	0	0	3.320	2.941	-0.378
	2																		
	3																		
	4																		
	5																		
	6																		
	7																		
	8																		
	9																		
	10																		
vlookup column reference:	1	2	3	4	5	6	7	8	9	10	11	12	13	14	15	16	17	18	19

Driving Side
Driving Side Resultant Seismic Surcharge Ht (H) = 0.67 — 2/3*H for yielding backfill and 0.63*H for non-yielding backfill per EM 1110-2-2100
Resultant Seismic Soil Load (ΔPe, lb/ft) = 838
Seismic Component Soil LEP top (psf) = 168
Seismic Component Soil LEP bottom (psf) = 0
Seismic Component Soil LEP slope (psf/ft) = -16.76

Driving Side

Elevation (ft)	Soil Unit	Pore Pressure (psf)	Vertical Stress (psf)		Design Lateral Earth and Pore Pressures													Soil Unit
					Soil Pressure (psf)		Surcharge (psf)		**Total Horizontal Static Pressure** (Pore Pressure+ Soil+Surcharge) (psf)	Soil Pressure - Seismic Component (psf)		Surcharge Pressure - Seismic Component (psf)		Horizontal			**Total Horizontal Seismic Pressure** (Pore Pressure+Static (Soil+Surcharge) +Seismic (Soil+Surcharge)) (psf)	
			Total	Effective	Vertical + Horizontal	Horizontal	Vertical + Horizontal	Horizontal		Vertical + Horizontal	Horizontal	Vertical + Horizontal	Horizontal	Soil+Surcharge Pressure - Seismic Component (psf)	Incremental Soil+Surcharge Load - Seismic Component (ΔPei, lb/ft)	Redistributed Soil+Surcharge Pressure - Seismic Component (psf)		
10.0	1	0	0	0	0	0	0	0	0	0	0	0	0	0	0	168	168	0
9.75	1	16	33	17	5	5	0	0	21	4	4	0	0	4	1	163	184	0
9.50	1	31	65	34	10	10	0	0	41	8	8	0	0	8	2	159	201	0
9.25	1	47	98	51	15	15	0	0	62	13	13	0	0	13	3	155	217	0
9.00	1	62	130	68	20	20	0	0	83	17	17	0	0	17	4	151	234	0
8.75	1	78	163	85	25	25	0	0	103	21	21	0	0	21	5	147	250	0
8.50	1	94	195	101	31	31	0	0	124	25	25	0	0	25	6	142	267	0
8.25	1	109	228	118	36	36	0	0	145	29	29	0	0	29	7	138	283	0
8.00	1	125	260	135	41	41	0	0	166	34	34	0	0	34	8	134	300	0
7.75	1	140	293	152	46	46	0	0	186	38	38	0	0	38	9	130	316	0
7.50	1	156	325	169	51	51	0	0	207	42	42	0	0	42	10	126	333	0
7.25	1	172	358	186	56	56	0	0	228	46	46	0	0	46	11	121	349	0
7.00	1	187	390	203	61	61	0	0	248	50	50	0	0	50	12	117	366	0
6.75	1	203	423	220	66	66	0	0	269	54	54	0	0	54	13	113	382	0
6.50	1	218	455	237	71	71	0	0	290	59	59	0	0	59	14	109	399	0
6.25	1	234	488	254	76	76	0	0	310	63	63	0	0	63	15	105	415	0
6.00	1	250	520	270	81	81	0	0	331	67	67	0	0	67	16	101	432	0
5.75	1	265	553	287	87	87	0	0	352	71	71	0	0	71	17	96	448	0
5.50	1	281	585	304	92	92	0	0	372	75	75	0	0	75	18	92	465	0
5.25	1	296	618	321	97	97	0	0	393	80	80	0	0	80	19	88	481	0
5.00	1	312	650	338	102	102	0	0	414	84	84	0	0	84	20	84	498	0
4.75	1	328	683	355	107	107	0	0	435	88	88	0	0	88	21	80	514	0
4.50	1	343	715	372	112	112	0	0	455	92	92	0	0	92	23	75	531	0
4.25	1	359	748	389	117	117	0	0	476	96	96	0	0	96	24	71	547	0
4.00	1	374	780	406	122	122	0	0	497	101	101	0	0	101	25	67	564	0
3.75	1	390	813	423	127	127	0	0	517	105	105	0	0	105	26	63	580	0
3.50	1	406	845	439	132	132	0	0	538	109	109	0	0	109	27	59	597	0
3.25	1	421	878	456	137	137	0	0	559	113	113	0	0	113	28	54	613	0
3.01	1	436	909	473	142	142	0	0	579	117	117	0	0	117	28	50	629	0
3.00	1	437	910	473	143	143	0	0	579	117	117	0	0	117	1	50	630	1
2.75	1	452	943	490	148	148	0	0	600	121	121	0	0	121	30	46	646	1
2.50	1	468	975	507	153	153	0	0	621	126	126	0	0	126	31	42	663	1
2.25	1	484	1,008	524	158	158	0	0	641	130	130	0	0	130	32	38	679	1
2.00	1	499	1,040	541	163	163	0	0	662	134	134	0	0	134	33	34	696	1
1.75	1	515	1,073	558	168	168	0	0	683	138	138	0	0	138	34	29	712	1
1.50	1	530	1,105	575	173	173	0	0	703	142	142	0	0	142	35	25	729	1
1.25	1	546	1,138	592	178	178	0	0	724	147	147	0	0	147	36	21	745	1
1.00	1	562	1,170	608	183	183	0	0	745	151	151	0	0	151	37	17	762	1
0.75	1	577	1,203	625	188	188	0	0	766	155	155	0	0	155	38	13	778	1
0.50	1	593	1,235	642	193	193	0	0	786	159	159	0	0	159	39	8	795	1
0.25	1	608	1,268	659	199	199	0	0	807	163	163	0	0	163	40	4	811	1
0.00	1	624	1,300	676	204	204	0	0	828	168	168	0	0	168	41	0	828	1

Plot Info		
	GSEL	X
Driving Side	10.0	0
	10.0	828
Resisting Side	3	0
	3	-1,110
Wall Top	10	0
Wall Bottom	0	0

Resisting Side

Resisting Side Resultant Seismic Surcharge Ht (H) = 0.67 — 2/3*H for yielding backfill per EM 1110-2-2100
Resultant Seismic Soil Load (ΔPpe, lb/ft) = -221
Seismic Component Soil LEP top (psf) = -148
Seismic Component Soil LEP bottom (psf) = 0
Seismic Component Soil LEP slope (psf/ft) = 49.19

Resisting Side

	Vertical Stress (psf)			Design Lateral Earth and Water/Pore Pressures - All Pressures Horizontal (δ = 0)						Resisting Side Plots - (negative of calculated values for plotting)				
Water/Pore Pressure (psf)	Total	Based on Total Soil Weight only for M-O, in case submerged	Effective	Soil (psf)	**Total Static Pressure** (Water/Pore Pressure+ Soil) (psf)	Soil Pressure - Seismic Component (psf)	Incremental Soil Load - Seismic Component (ΔPpei, lb/ft)	Redistributed Soil Pressure - Seismic Component (psf)	**Total Seismic Pressure** (Pore Pressure+Static Soil+Seismic Soil) (psf) [***does **not** include hydrodynamic pressure of free water above soil***]	Water/Pore Pressure (psf)	Soil (psf)	**Total Static Pressure** (Water/Pore Pressure+ Soil) (psf)	Redistributed Soil Pressure - Seismic Component (psf)	**Total Seismic Pressure** (Pore Pressure+Static Soil+Seismic Soil) (psf) [***does **not** include hydrodynamic pressure of free water above soil***]
0	0	0	0	0	0	0	0	0	0	0	0	0	0	0
0	0	0	0	0	0	0	0	0	0	0	0	0	0	0
0	0	0	0	0	0	0	0	0	0	0	0	0	0	0
0	0	0	0	0	0	0	0	0	0	0	0	0	0	0
0	0	0	0	0	0	0	0	0	0	0	0	0	0	0
0	0	0	0	0	0	0	0	0	0	0	0	0	0	0
0	0	0	0	0	0	0	0	0	0	0	0	0	0	0
0	0	0	0	0	0	0	0	0	0	0	0	0	0	0
0	0	0	0	0	0	0	0	0	0	0	0	0	0	0
0	0	0	0	0	0	0	0	0	0	0	0	0	0	0
0	0	0	0	0	0	0	0	0	0	0	0	0	0	0
16	16	0	0	0	16	0	0	0	16	-16	0	-16	0	-16
31	31	0	0	0	31	0	0	0	31	-31	0	-31	0	-31
47	47	0	0	0	47	0	0	0	47	-47	0	-47	0	-47
62	62	0	0	0	62	0	0	0	62	-62	0	-62	0	-62
78	78	0	0	0	78	0	0	0	78	-78	0	-78	0	-78
94	94	0	0	0	94	0	0	0	94	-94	0	-94	0	-94
109	109	0	0	0	109	0	0	0	109	-109	0	-109	0	-109
125	125	0	0	0	125	0	0	0	125	-125	0	-125	0	-125
140	140	0	0	0	140	0	0	0	140	-140	0	-140	0	-140
156	156	0	0	0	156	0	0	0	156	-156	0	-156	0	-156
172	172	0	0	0	172	0	0	0	172	-172	0	-172	0	-172
187	187	0	0	0	187	0	0	0	187	-187	0	-187	0	-187
203	203	0	0	0	203	0	0	0	203	-203	0	-203	0	-203
218	218	0	0	0	218	0	0	0	218	-218	0	-218	0	-218
234	234	0	0	0	234	0	0	0	234	-234	0	-234	0	-234
249	249	0	0	0	249	0	0	0	249	-249	0	-249	0	-249
250	250	0	0	0	250	0	0	-148	102	-250	0	-250	148	-102
265	282	33	17	56	321	-12	-2	-135	186	-265	-56	-321	135	-186
281	315	65	34	112	393	-25	-5	-123	270	-281	-112	-393	123	-270
296	347	98	51	168	465	-37	-8	-111	354	-296	-168	-465	111	-354
312	380	130	68	224	536	-49	-11	-98	438	-312	-224	-536	98	-438
328	412	163	84	281	608	-61	-14	-86	522	-328	-281	-608	86	-522
343	445	195	101	337	680	-74	-17	-74	606	-343	-337	-680	74	-606
359	477	228	118	393	752	-86	-20	-61	690	-359	-393	-752	61	-690
374	510	260	135	449	823	-98	-23	-49	774	-374	-449	-823	49	-774
390	542	293	152	505	895	-111	-26	-37	858	-390	-505	-895	37	-858
406	575	325	169	561	967	-123	-29	-25	942	-406	-561	-967	25	-942
421	607	358	186	617	1,038	-135	-32	-12	1,026	-421	-617	-1,038	12	-1,026
437	640	390	203	673	1,110	-148	-35	0	1,110	-437	-673	-1,110	0	-1,110

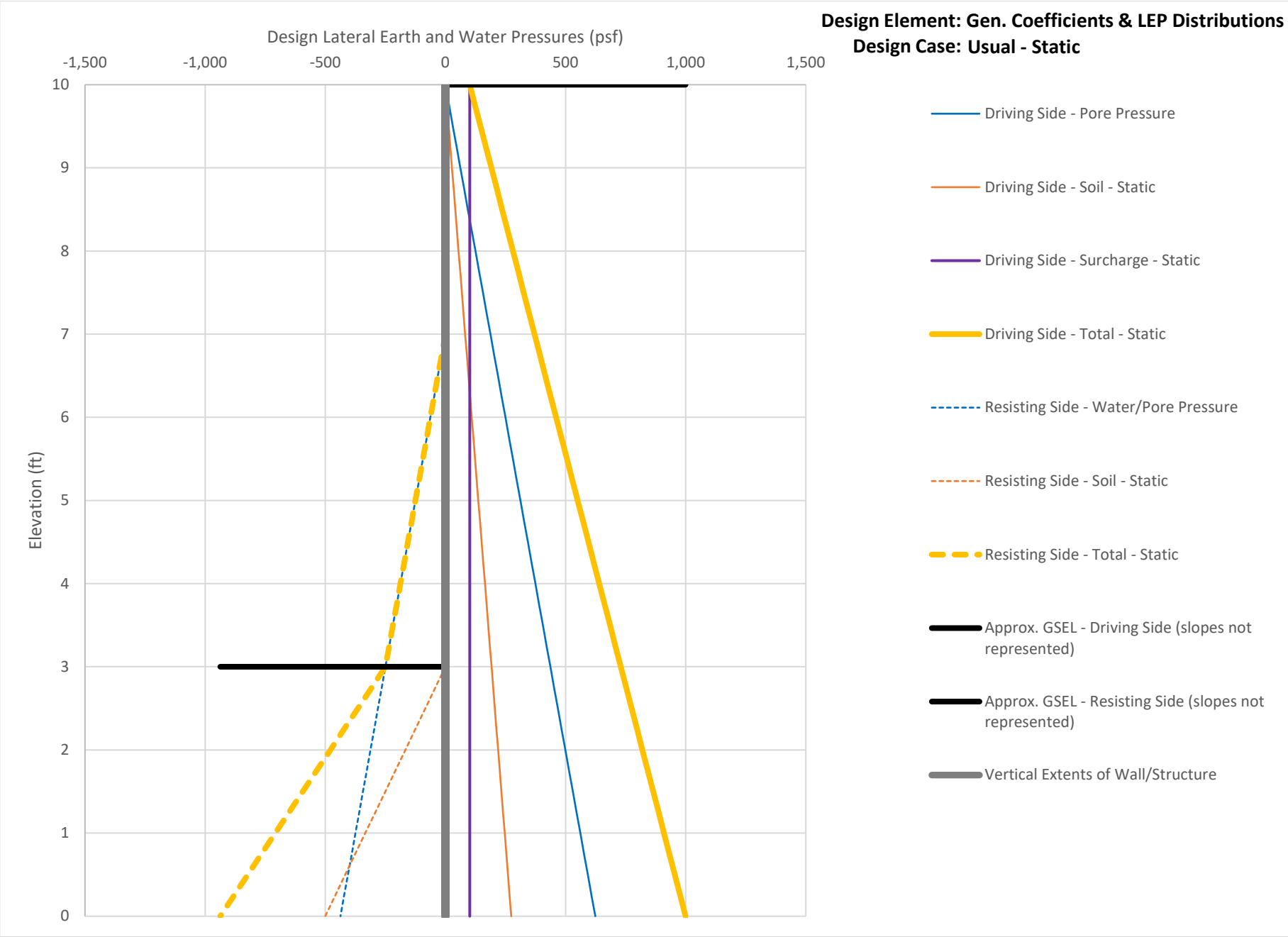
Design Element: Gen. Coefficients & LEP Distributions
Design Case: Usual - Static
Design Lateral Earth and Water Pressures (psf)
-1,500
-1,000
-500
0
500
1,000
1,500
Elevation (ft)
10
9
8
7
6
5
4
3
2
1
0
Driving Side - Pore Pressure
Driving Side - Soil - Static
Driving Side - Surcharge - Static
Driving Side - Total - Static
Resisting Side - Water/Pore Pressure
Resisting Side - Soil - Static
Resisting Side - Total - Static
Approx. GSEL - Driving Side (slopes not represented)
Approx. GSEL - Resisting Side (slopes not represented)
Vertical Extents of Wall/Structure

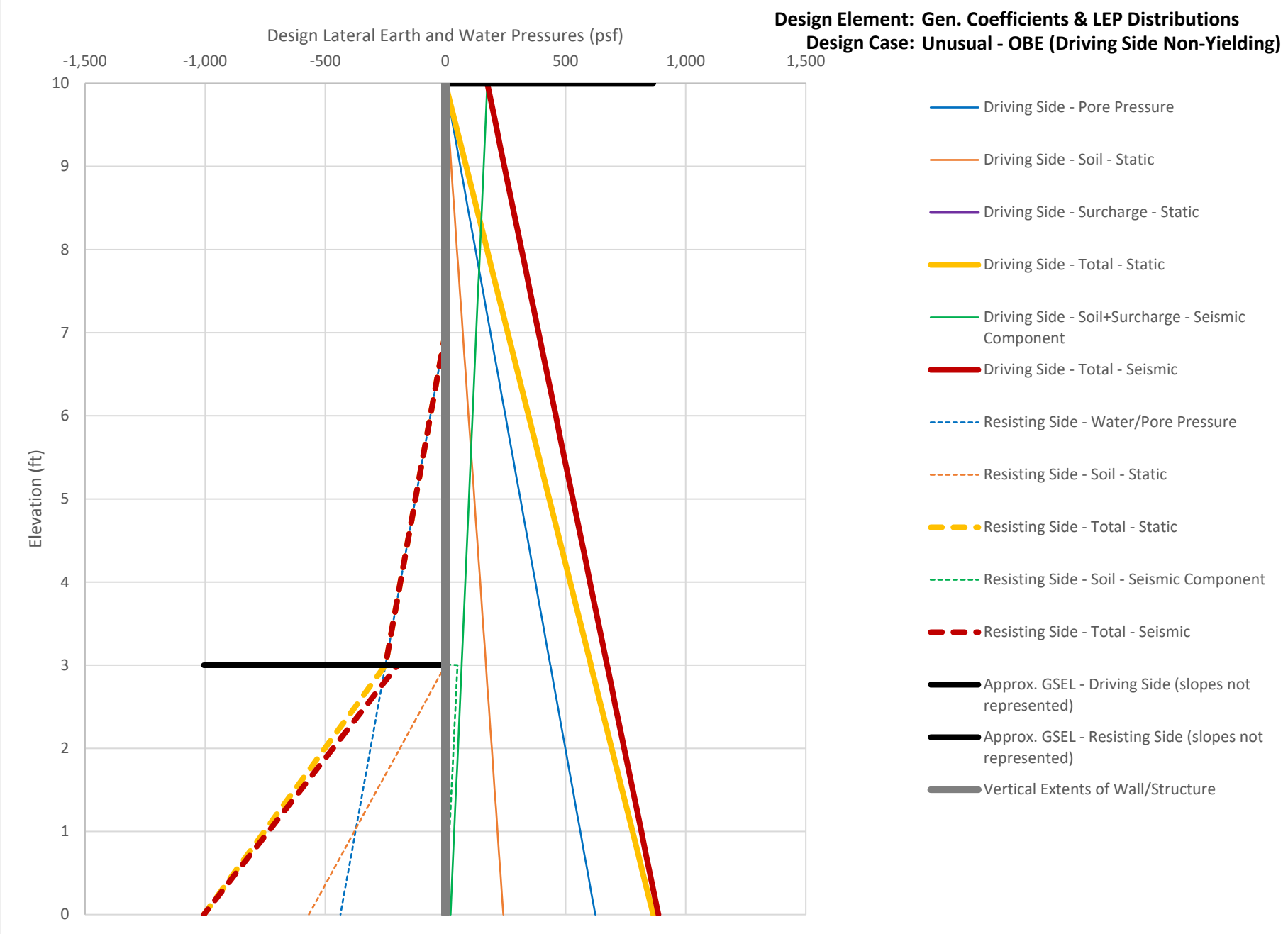
Design Element: Gen. Coefficients & LEP Distributions
Design Case: Unusual - OBE (Driving Side Non-Yielding)
Design Lateral Earth and Water Pressures (psf)
-1,500
-1,000
-500
0
500
1,000
1,500
Elevation (ft)
10
9
8
7
6
5
4
3
2
1
0
Driving Side - Pore Pressure
Driving Side - Soil - Static
Driving Side - Surcharge - Static
Driving Side - Total - Static
Driving Side - Soil+Surcharge - Seismic Component
Driving Side - Total - Seismic
Resisting Side - Water/Pore Pressure
Resisting Side - Soil - Static
Resisting Side - Total - Static
Resisting Side - Soil - Seismic Component
Resisting Side - Total - Seismic
Approx. GSEL - Driving Side (slopes not represented)
Approx. GSEL - Resisting Side (slopes not represented)
Vertical Extents of Wall/Structure

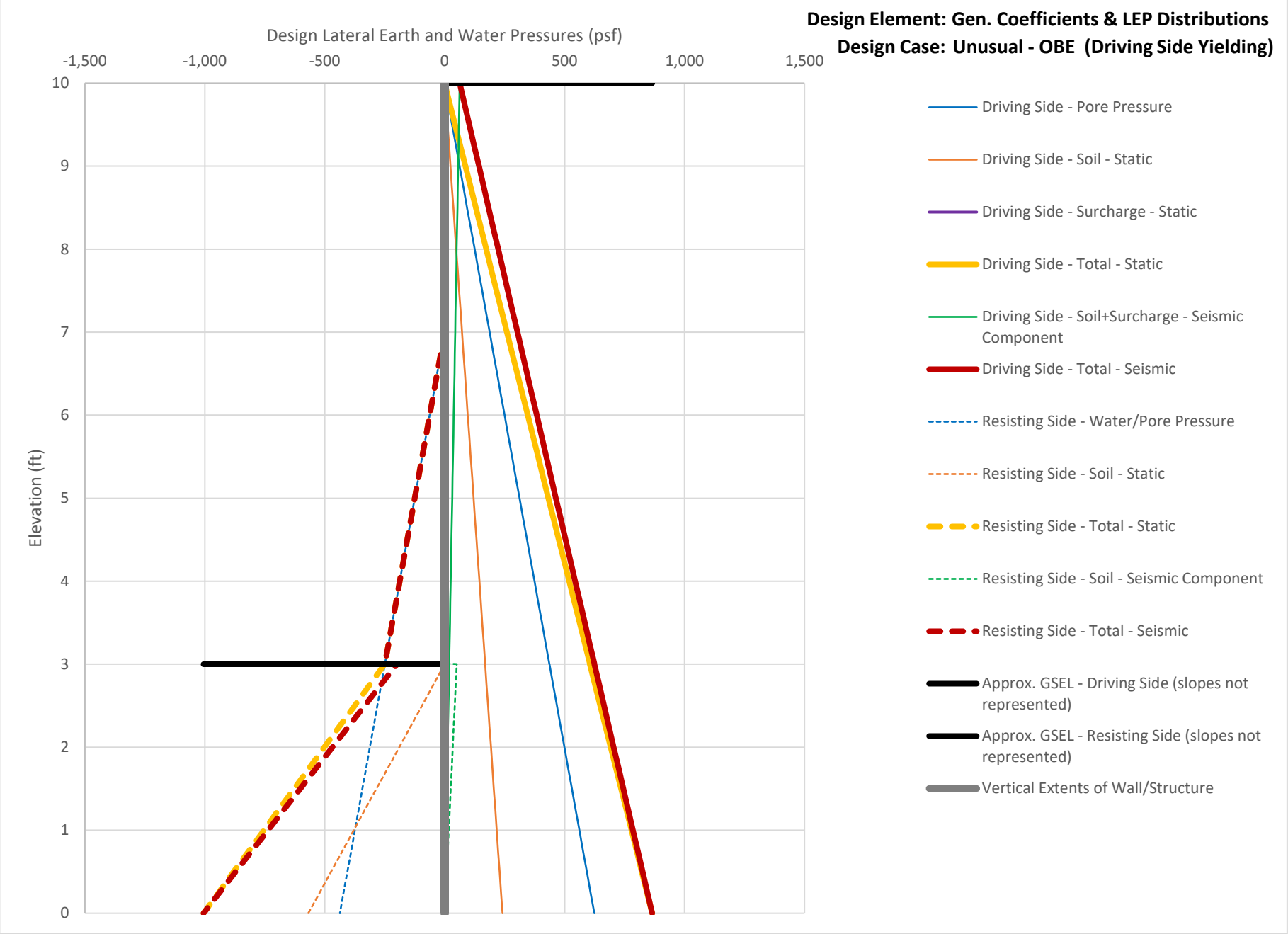
Design Element: Gen. Coefficients & LEP Distributions
Design Case: Unusual - OBE (Driving Side Yielding)
Design Lateral Earth and Water Pressures (psf)
-1,500
-1,000
-500
0
500
1,000
1,500
Elevation (ft)
10
9
8
7
6
5
4
3
2
1
0
Driving Side - Pore Pressure
Driving Side - Soil - Static
Driving Side - Surcharge - Static
Driving Side - Total - Static
Driving Side - Soil+Surcharge - Seismic Component
Driving Side - Total - Seismic
Resisting Side - Water/Pore Pressure
Resisting Side - Soil - Static
Resisting Side - Total - Static
Resisting Side - Soil - Seismic Component
Resisting Side - Total - Seismic
Approx. GSEL - Driving Side (slopes not represented)
Approx. GSEL - Resisting Side (slopes not represented)
Vertical Extents of Wall/Structure

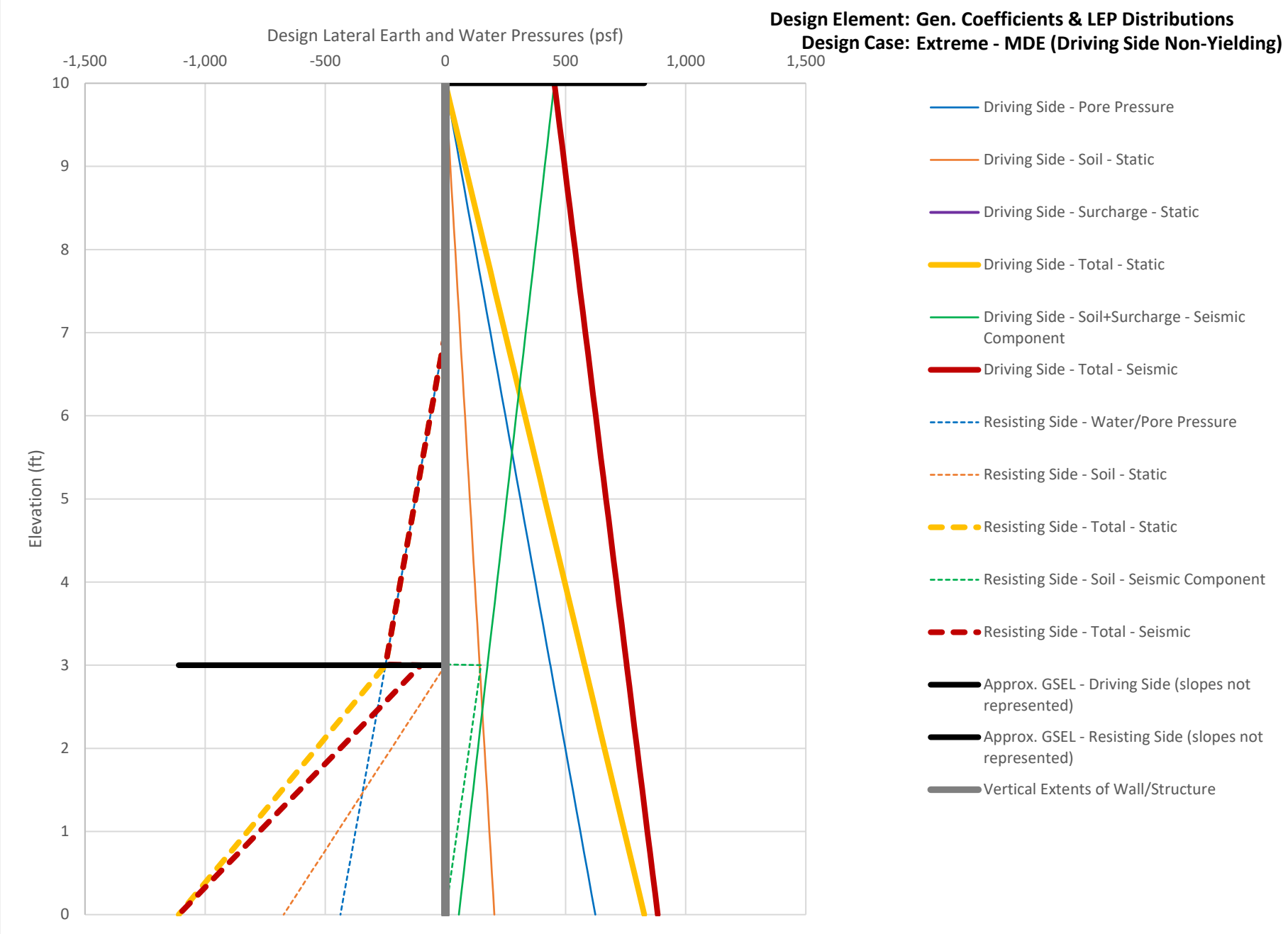
Design Element: Gen. Coefficients & LEP Distributions
Design Case: Extreme - MDE (Driving Side Non-Yielding)
Design Lateral Earth and Water Pressures (psf)
-1,500
-1,000
-500
0
500
1,000
1,500
Elevation (ft)
10
9
8
7
6
5
4
3
2
1
0
Driving Side - Pore Pressure
Driving Side - Soil - Static
Driving Side - Surcharge - Static
Driving Side - Total - Static
Driving Side - Soil+Surcharge - Seismic Component
Driving Side - Total - Seismic
Resisting Side - Water/Pore Pressure
Resisting Side - Soil - Static
Resisting Side - Total - Static
Resisting Side - Soil - Seismic Component
Resisting Side - Total - Seismic
Approx. GSEL - Driving Side (slopes not represented)
Approx. GSEL - Resisting Side (slopes not represented)
Vertical Extents of Wall/Structure

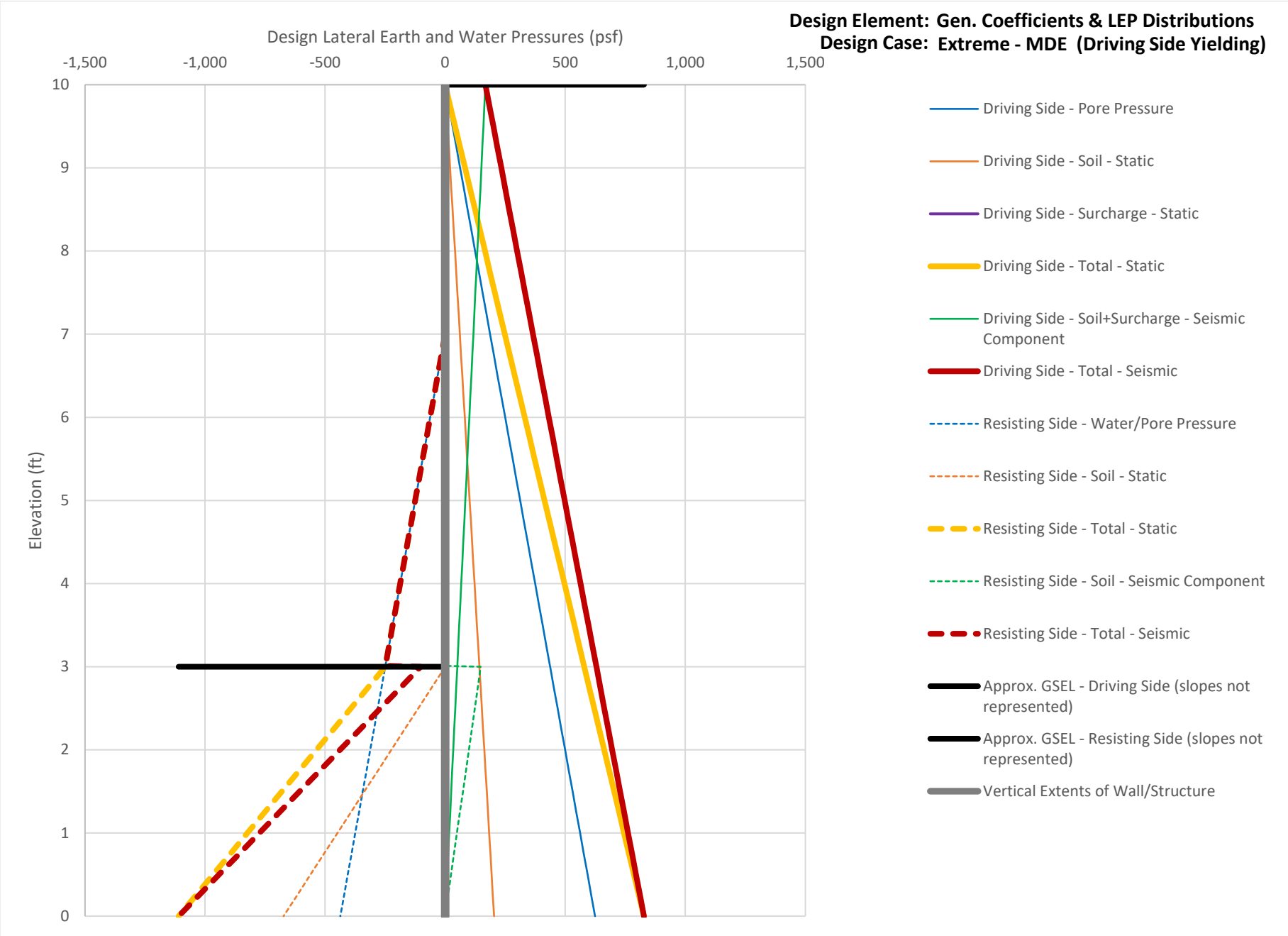
Design Element: Gen. Coefficients & LEP Distributions
Design Case: Extreme - MDE (Driving Side Yielding)
Design Lateral Earth and Water Pressures (psf)
-1,500
-1,000
-500
0
500
1,000
1,500
Elevation (ft)
10
9
8
7
6
5
4
3
2
1
0
Driving Side - Pore Pressure
Driving Side - Soil - Static
Driving Side - Surcharge - Static
Driving Side - Total - Static
Driving Side - Soil+Surcharge - Seismic Component
Driving Side - Total - Seismic
Resisting Side - Water/Pore Pressure
Resisting Side - Soil - Static
Resisting Side - Total - Static
Resisting Side - Soil - Seismic Component
Resisting Side - Total - Seismic
Approx. GSEL - Driving Side (slopes not represented)
Approx. GSEL - Resisting Side (slopes not represented)
Vertical Extents of Wall/Structure

TUNNEL WATER INFLOW CALCULATIONS

TUNNEL WATER INFLOW ESTIMATE

Packer test range (data from 2008 GBR):

min	0.001	ft/day
max	9.8	ft/day
average	0.74	ft/day

Goodman's equation with Heuer's reduction

$$Q_L = 2\pi KH / \ln(2z/r) \times 1/8$$

QL =			flow per unit length of tunnel					
Kmin=	0.001	ft/day	hydraulic conductivity, estimated from packer test data					
Kmax=	9.8	ft/day	hydraulic conductivity, estimated from packer test data					
Kave=	0.74	ft/day	hydraulic conductivity, estimated from packer test data					
H=	80		initial head	assumed tunnel centerline =	1020	assumed regional gw =	1100	
z=	160		distance from centerline to top of rock	assumed tunnel centerline =	1020	ave top of rock =	1180	
r=	8	ft	tunnel diameter					

QL(min)=	0.017033	ft3/day	8.84819E-05	gpm	**Q(min) - full length =**	**0.11 gpm**
QL(max)=	166.9212	ft3/day	0.867123082	gpm	**Q(max) - full length =**	**1062 gpm**
QL(ave)=	12.60425	ft3/day	0.065476641	gpm	**Q(ave) - full length =**	**80 gpm**

Howard A. Hanson Dam
Additional Water Storage Project

Section 902 Post Authorization Change Validation Study – Fish Passage
King County, Washington

APPENDIX B-4

CIVIL

Final Integrated Validation Report and

Supplemental Environmental Impact Statement

US Army Corps of Engineers®
Seattle District

TACOMA POWER
TACOMA WATER
TACOMA RAIL
TACOMA PUBLIC UTILITIES

Table of Contents

Quantities

2022 Civil Plates

2009 FPF Civil Plates

2014 Left Bank Drainage Plates

2014 Left Bank Drainage Design Documentation Report

2014 Left Bank Drainage Specifications

The Civil Appendix largely supports the Cost Engineering Appendix and includes a summary of the current design estimated quantities and supporting figures.

HAHD AWS FPF Civil Quantities	Calculated																												
Recommended Values	elevation	Area	W	station start	station end	L	H	W		Overburden Cut	Overburden Cut	Overburden Cut	Overburden Cut	Rock Cut		Fill	Fill	Fill if concrete 5	Fill if concrete to	Riprap		PCC		Base Course	Structural Fill	Rock Spalls	Rock Fill	Free Draining Fill	Notes
Upstream Features	ft	SF	ft			ft	ft	ft					CY	CY				CY		CY		CY		CY	CY	CY	CY	CY	
Structure Excavation by volumes														36,308															
Structure Excavation by volume topp clipped to structure excavation														36,356															
Structure Excavation by triangles														44,817															
Structure Excavation by corridor														44,887															
Structure Excavation by corridor Cut		54,707												36,730															
concrete backfill from corridor							10											3,333											
structural backfill to top of excavation from corridor																									22,802				
Note: 1167 is apprximate elevation																													
backfill to 1167 including concrete backfill and structural backfill from volumes																		37,406											
Structural backfill to 1167 minus concrete backfill																									28,495				
Fill ~1167 to 1181																											26,543		
Fill bottom of excation to 1181																											64,222		
minus backfill to 1167																											-		
Fill including pccc to 1181																											64,222		
1181 Area fill calculations to compare with model		48,816																10,854		-									
1181 PCC elev 1181	1,181	48,816					1															1,211							
1181 Base Course		48,816					1																	1,205					
1181 Structural Fill elev 1177	1,177	48,816					3																		4,821				
1181 Rock spalls	1,175	48,816					2																			3,616			
1181 Rock fill above elevation 1165 idealized at 10'	1,165	48,816					10																				18,080	26,517	
Rough Check Quantities																													
sturcture																													
Rough check walls and volume		10,140	43	342	420	78	130							16,036															
		30,810	44	420	657	237	130							50,209															
		40,950												66,245															
rough check bottom		2,989	43	350	420	70																							
rough check bottom		10,120	44	420	650	230																							
		13,109																											
Wall Right		26,625																											
Wall Left		23,575																											
back		8,200																											
Total		58,400																											
Free draining backill against structure, 3 foot wide up to elevation 1167 take area of left and right wall x 3 feet subtract this from fill around structure		50,200	3																									5,578	gravel
Backfill to elev 1167 ish Check Rough Numbers														581				55,193											
Triangles														7,100				37,120											
End Area														7,267				37,235											

Downstream Features						L	H	W	Total Cut			Total Cut	Overburden Cut	Rock Cut	Total Fill			Total Fill	concrete	Riprap		Road Gravel							Free Draining	
						ft	ft	ft	CF			CY	CY	CY	CF			CY	cy	CY		CY							CY	
Downstream Channel Excavation (need to refine for rock or overburden) see below under new downstream cooridor												4,393						370		140										
Downstream Scour Hole Excavation												3,501								740										
Downstream Plunge Pool Excavation												819								44										
Downstream Excavation total												8,713						370	-	924										
Downstream Excavation Merged												8,039																		
Soldier Pile Wall Assumed may not be needed, could be in rock.						150																								
~~Downstream Channel~~																														
~~Downstream Channel Corridor~~												~~4,510~~						~~1,480~~	~~912~~	~~85~~										
									~~130,837~~			~~4,846~~			~~38,261~~			~~1,417~~												
New Downstream Channel Corridor												4,127						145	840										719	
Terrain Lidar to Channel Excavation									118,600			4,393			174			6												
Rock to Channel Excavation									92,336					3,420	31,793			1,178												
Overburden Ex = Total Exc - Rock Exc													973																	
												-																		
Downstream Road (Existing)		Area		station start	station end	L	Gravel Thickness	W				Cut						Fill				Road Gravel								
		SF				ft	ft	ft	CF			CY	CY	CY	CF			CY	CY	CY		CY								
Downstream Road, This cut could be mixture of rock and overburden				400	720	150	1	20				1,220						4,960				120								
		Area		Station start	Station End	L						Total Cut	Overburden	Rock																
		SF				ft						CY	CY	CY																
Tunnel Outlet Cut and Cover				100	200	100						3,603	1,935	1,668																
Rock Slopes 10V:1V Rock cut (includes tunnel)		4,040																												
Overburden Slopes ~1.5H:1V over rock or on rock		5,760																												
		SF				ft	ft	ft	CF			CY	CY	CY	CF			CY	CY	CY		CY								
		Area		station start	station end	L	Gravel Thickness	W		Cut	Cut	Cut	Cut			Fill	Fill	Fill	Fill		Road Grav	Road Grav	Road Gravel							
		SF				ft	ft	ft	CY	CY	CY	CY	CY	CY	CF	CY	CY	CY	CY	CY		CY								
										component	end area	boundary	terrain			component	end area	boundary	terrain		componen	end area	boundary							
Access Roads 3, 3A, 3B from 2008 dtms													6,417						18,498		1,504		-							
Access Road 3 Merged												6,097	6,417					19,279	18,498			982								
Access Road 3				0	1,025	1,025	1	20	759	6,363	6,071	6,012	5,877			10,151	10,706	11,560	11,514		821	819	824							
Access Road 3A				39,875	40,530	655	1	14	340	556	7,427	8,681	403			2,862	12,706	19,270	2,726		384	697	801							
Access Road 3B				50,000	50,457	457	1	20	339	259	266	6,800	150			3,734	15,565	20,864	3,940		299	486	682							
									1,437	7,178	13,764	21,493	6,430			16,747	38,977	51,694	18,179		1,504	2,002	2,307							

US Army Corps of Engineers ®
Seattle District

DRAFT FEASIBILITY STUDY

FY25 P2-488932 HAHDFPF
HOWARD A. HANSON DAM FISH PASSAGE FACILITY

PALMER, WASHINGTON

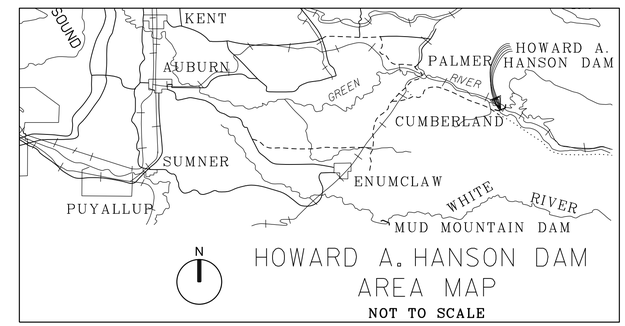

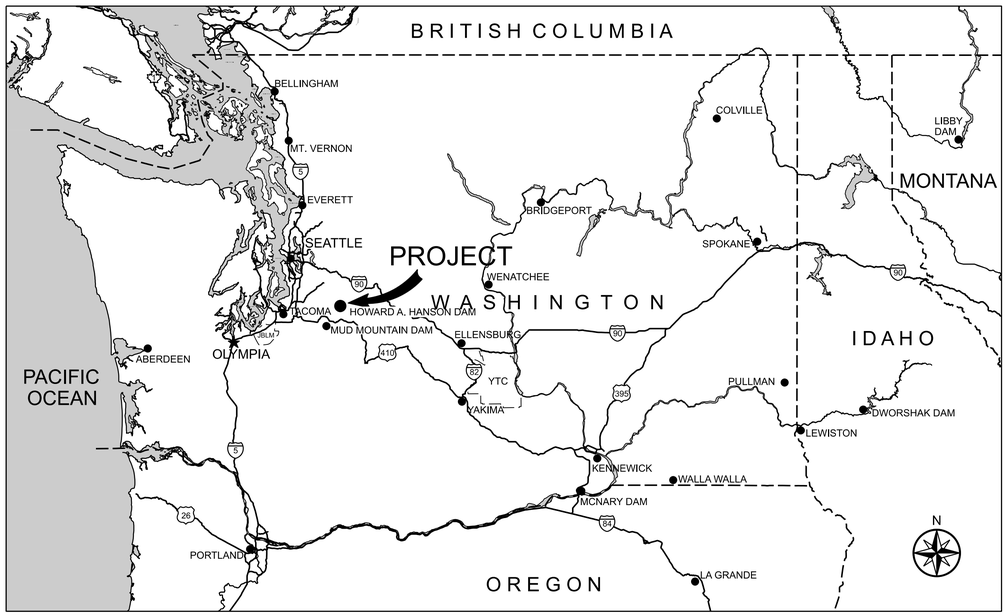

PROJECT VICINITY MAP
NTS

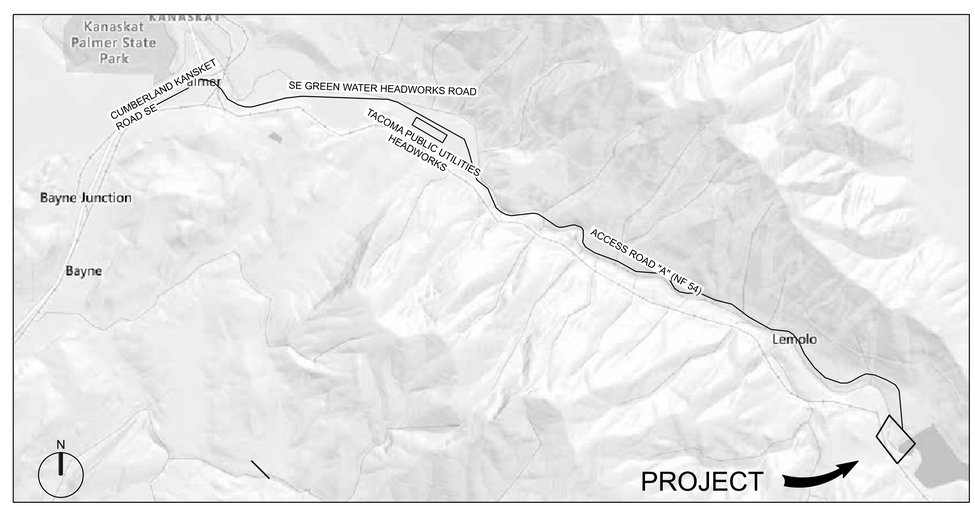

PROJECT LOCATION MAP
NTS

SAFETY FIRST

IF SHEET MEASURES LESS THAN 22" X 34" IT IS A REDUCED PRINT. REDUCE SCALE ACCORDINGLY.

US Army Corps of Engineers ®
Seattle District

Date: 09 NOVEMBER 2021
Solicitation No.: -
File No.: E-56-14-22

Recommended by: GUY L. GREEN, P.E. — Chief, Design Branch — 11/09/21 Date
Approved by: JOANN T. WALLS, P.E. — Chief, Engineering Div. — 11/09/21 Date

Submitted by: KATHERINE LaPONTE — Project Manager — 11/09/21 Date
Reviewed by: ANIL L. NISARGAND, P.E. — Chief, Specs. and Tech Review — 11/09/21 Date

U.S. ARMY CORPS OF ENGINEERS
SEATTLE DISTRICT
SEATTLE, WASHINGTON

Prepared by: JENNIFER L. WEST — Chief, Civil Section — 11/09/21 Date

FY22 P2-474522 DER
DUCKABUSH ECOSYSTEM RESTORATION
BRINNON, WASHINGTON

TITLE, VICINITY AND LOCATION MAPS

SHEET IDENTIFICATION
G-001

FILE PATH: pw://PWINT-WPC.EIS.DS.USACE.ARMY.MIL:CENWS - Seattle District/Documents/Civil Works/Howard Hanson Dam, WA/FY25_P2-488932_HAHDFPF/Plan Sets/03_Sheets/G-001 COVER SHEET
PLOT DATE: 9:14:33 AM 11/29/2021

FY25 P2-488932 HAHDFPF
DRAWING INDEX

SHEET INDEX

01 GENERAL

G-001	COVER SHEET
G-002	INDEX OF DRAWINGS
G-003	SYMBOLS, ABBREVIATIONS, & GENERAL NOTES
G-004	ISOMETRIC FRONT VIEW
G-005	ISOMETRIC SIDE VIEW
G-006	ISOMETRIC OBLIQUE VIEW
G-007	INTAKE ISOMETRIC SECTIONS
G-008	FULL FLOW ISOMETRIC SECTIONS
G-009	ISOMETRIC FACILITY VIEW
G-101	CONSTRUCTION LIMITS SITE PLAN
G-102	STAGING AREAS
G-103	GENERAL SITE PLAN
G-104	EXISTING SITE CONDITIONS PLAN
G-105	INLET ELEVATIONS
G-106	CENTERLINE OF THE COLLECTOR CROSS SECTION (TRASH RACK TO BACK OF STEEP)
G-107	INTAKE ISOMETRIC SECTIONS
G-108	FULL FLOW ISOMETRIC SECTIONS
G-109	ENLARGED SECTION OF THE MISHORN
G-110	CENTERLINE OF PRIMARY BYPASS
G-111	CENTERLINE OF FULL FLOW BYPASS
G-112	SECTION CUT ALONG BYPASS TO SHOW ACCESS
G-113	
G-114	
G-115	TUNNEL SECTION WHERE ADJACENT TO EXISTING RO
G-116	TOWER AND ELEVATOR ACCESS
G-117	
G-118	STRUCTURE EXCAVATION PLAN
G-119	STRUCTURE EXCAVATION PROFILE
G-120	STRUCTURE EXCAVATION SECTION 4+50
G-121	DOWNSTREAM ROAD PLAN AND PROFILE
G-122	DOWNSTREAM CHANNEL PLAN
G-123	TUNNEL PLAN AND PROFILE

US Army Corps of Engineers®

MARK	DESCRIPTION	DATE

DESIGNED BY:
DRAWN BY:
CHECKED BY:
SUBMITTED BY: KATHERINE LaPONTE
SIZE:
ISSUE DATE: 09 NOVEMBER 2021
SOLICITATION NO.:
CONTRACT NO.:
FILE NO.: E-56-14-22

U.S. ARMY CORPS OF ENGINEERS
SEATTLE DISTRICT
SEATTLE, WASHINGTON

FY25 P2-488932-HAHDFPF
HOWARD A HANSON DAM FISH PASSAGE FACILITY
GREEN RIVER, WASHINGTON

DRAWING INDEX

SHEET ID
G-002

DRAFT FEASIBILITY DESIGN

FILE PATH: pw://PWINT-WPC.EIS.DS.USACE.ARMY.MIL:CENWS - Seattle District/Documents/Civil Works/Howard Hanson Dam, WA/FY25_P2-488932_HAHDFPF/Plan Sets/03_Sheets/DRAWING INDEX
PLOT DATE: 10:32:56 AM 11/29/2021

LEGEND

SURVEY

THEOR./ EXIST.	FOUND/ PROP.	DESCRIPTION (ABBR)
		ANGLE POINT
		BENCH MARK
		REBAR/IRON PIPE
		MONUMENT (IN CASE)
		MONUMENT (SURFACE)
× ELEV	× ELEV	SPOT ELEVATION

EXISTING		THIS CONTRACT
W 8"	WATER LINE & PIPE SIZE	
SAN 6"	SANITARY SEWER & PIPE SIZE	
ST 10"	STORM DRAIN & PIPE SIZE	
	STORM DRAIN MANHOLE W/ TOP & INVERT ELEVATIONS	D EL 8.65 IE 6.00
	CATCH BASIN W/ TOP & INVERT ELEVATIONS	CB EL 8.65 IE 6.00
	BUILDING OR STRUCTURE	
101 1M	INSTRUMENTATION	
	PROPOSED GROUND	
	PROJECT CONSTRUCTION LIMITS	
	TREE	
	VEGETATION	
	LIGHT POLE	
	CONCRETE PAVEMENT	
	LANDSCAPE/HYDROSEED	
250	CONTOUR	250
250.9	SPOT ELEVATION	250.9
	GRAVEL ROAD/SURFACING	

DRAFTING

- A1 / C-304 — DIRECTION OF VIEW; LETTER/NUMBER INDICATES GRID LOCATION; PLATE NUMBER WHERE SECTION IS DRAWN
- A1 / C-502 — LETTER/NUMBER INDICATES GRID LOCATION; PLATE NUMBER WHERE DETAIL IS DRAWN
- N — NORTH ARROW
- 0 20 40 — GRAPHIC SCALE (FEET)

ABBREVIATIONS

AC	ASPHALT
A/G	ABOVEGROUND
BRDG	BRIDGE
CLF	CHAIN LINK FENCE
COR	USACE CONTRACTING OFFICER REPRESENTATIVE
D	DELTA
Dc	DEGREE OF CURVATURE
E	EAST
EL, ELEV	ELEVATION
EMB	EMBANKMENT
EO	EDGE OF
EOA	EDGE OF ASPHALT
EOC	EDGE OF CONCRETE
EOG	EDGE OF GRAVEL
EP	EDGE OF PAVEMENT
EXC	EXCAVATION
EXIST	EXISTING
FIG	FIGURE
FT	FEET/FOOT
H, HORIZ	HORIZONTAL
IE	INVERT
IN	INCH/INCHES
INV	INVERT ELEVATION
L	LENGTH
LF	LINEAL FOOT/FEET
LT	LEFT
MIN	MINIMUM
MISC	MISCELLANEOUS
N	NORTH
NTS	NOT TO SCALE
O/W	OIL/WATER
PCC	PORTLAND CEMENT CONCRETE
PI	POINT OF INTERSECTION
PC	POINT OF CURVATURE
PT	POINT OF TANGENCY
POB	POINT OF BEGINING
POE	POINT OF ENDING
R	RADIUS
STA	STATION
PVMT	PAVEMENT
REQD	REQUIRED
SECT	SECTION
SPEC	SPECIFICATION
STA	STATION
STD	STANDARD
S1	LAYOUT SURVEY CASE AND MONUMENT AND NUMBER
T	TANGENT
TEMP	TEMPORARY
TYP	TYPICAL
U/G	UNDERGROUND
VAR	VARIES
V, VERT	VERTICAL
VPI	VERTICAL POINT OF INTERSECTION
W/	WITH
W.S.	WATER SURFACE
WSDOT	WASHINGTON STATE DEPARTMENT OF TRANSPORTATION

GENERAL NOTES

CIVIL

1. ELEVATIONS SHOWN ON THESE DRAWINGS ARE BASED ON NGVD 1929 GA., SA., 47., VERTICAL DATUM

2. HORIZONTAL COORDINATES ON THESE DRAWINGS ARE BASED ON THE WASHINGTON STATE PLANE COORDINATE SYSTEM - NAD 27, NORTH ZONE.

3. CONTRACTOR SHALL VERIFY ALL DIMENSIONS BEFORE STARTING WORK AND SHALL IMMEDIATELY NOTIFY THE ENGINEER OF ANY DISCREPANCIES.

4. BEFORE EXCAVATION OR TRENCHING, CONTRACTOR SHALL CALL 1-800-424-5555 TO LOCATE UNDERGROUND UTILITIES. ANY DAMAGE TO EXISTING FACILITIES SHALL BE REPAIRED BY THE CONTRACTOR AT NO COST TO THE OWNER.

5. THE HORIZONTAL AND VERTICAL LOCATION OF EXISTING UTILITIES AND IMPROVEMENTS ARE APPROXIMATE. THE CONTRACTOR SHALL VERIFY THE EXACT LOCATION OF ALL UTILITIES AND IMPROVEMENTS PRIOR TO EXCAVATION TO AVOID DAMAGE AND DISTURBANCE. THE CONTRACTOR IS RESPONSIBLE FOR PROTECTING AND PRESERVING THE INTEGRITY OF ALL EXISTING UTILITIES DURING CONSTRUCTION.

6. ALL DISTANCES SHOWN ON THE DRAWINGS AND DESCRIBED IN THE SPECIFICATIONS SHALL BE INTERPRETED TO REFER TO HORIZONTALLY AND VERTICALLY PROJECTED PLANES UNLESS OTHERWISE NOTED.

7. SITE ACCESS DURING CONSTRUCTION IS LIMITED TO STABILIZED CONSTRUCTION ENTRANCES.

8. ALL SURFACES DISTURBED DURING CONSTRUCTION AND NOT SCHEDULED TO RECEIVE GRAVEL, QUARRY SPALLS, OR OTHER SURFACING SHALL BE SEEDED, FERTILIZED, AND MULCHED IN ACCORDANCE WITH THE SPECIFICATIONS OR AS DIRECTED BY THE COR.

9. THE CONTRACTOR SHALL BE RESPONSIBLE FOR FULL RESTORATION OF ALL EXISTING FEATURES DISTURBED DURING CONSTRUCTION TO THEIR ORIGINAL CONDITION UNLESS OTHERWISE INDICATED BY THE COR.

10. OTHER WORK ON-SITE MAY BE PERFORMED BY OTHER CONTRACTORS IN CONJUNCTION WITH THIS PROJECT.

11. EXPECT ROCK FOR EXCAVATIONS BELOW ELEVATION 1165 FEET.

12. THE CONTRACTOR SHALL NOT BLOCK ANY EXISITNG GATES OR ACCESS WITHOUT COORDINATING WITH THE USACE COR. ROAD BLOCKAGES SHALL BE MINIMIZED TO REDUCE DISRUPTION TO DAM OPERATIONS AND OTHER CONSTRUCTION PROJECTS AROUND THE DAM. AT LEAST ONE ACCESS ROAD ACCROSS THE DAM SHALL REMAIN OPEN AT ALL TIMES.

13. THE CONTRACTOR SHALL BE ABLE TO PROVIDE AND MAINTAIN PORTABLE LIGHT PLANTS WHEREVER CREWS ARE WORKING FOR REQUIRED SAFETY ILLUMINATION THAT SHALL OPERATE FROM DUSK TO DAWN, OR TO THE HOUR THAT WORK IS COMPLETED AT NIGHT. LIGHT PLANTS SHALL BE 6KW MINIMUM OUTPUT WITH LIGHT MAST.

14. BASIC FIRE FIGHTING AND SUPPRESSION EQUIPMENT IS REQUIRED FOR WORK IN FOREST AREAS FOR EACH DRILLING SITE AND VEHICLE. WORK SITE AND THE DISPOSAL SITE.

STA NAME	CONTROL POINTS NORTHING	EASTING	ELEVATION	DESCRIPTION
2200	102044.617	1763714.473	1229.962	SET 3 1/2" BRASS CAP STAMPED "CORPS OF ENGINEERS - US ARMY 2200 2008", IN NE CORNER OF CONCRETE PAD FOR PROPANE TANK
2201	103066.831	1763800.796	1227.812	SET 3 1/2" BRASS CAP STAMPED "CORPS OF ENGINEERS - US ARMY 2201 2008", IN CONCRETE
2202	102382.384	1763337.380	1201.535	SET 3 1/2" BRASS CAP STAMPED "CORPS OF ENGINEERS - US ARMY 2202 2008", IN CONCRETE RETAINING WALL
2203 (HOWH)	102647.199	1763137.437	1227.754	FOUND 2 1/2" KING COUNTY BRASS CAP IN CONCRETE.
2204 (5M)	102829.060	1763446.509	1228.874	FOUND 3 1/2" BRASS CAP IN CONC

US Army Corps of Engineers®

MARK	DESCRIPTION	DATE

DESIGNED BY: KATO
DRAWN BY: KATO
CHECKED BY: SKRINDE
SUBMITTED BY: KATHERINE LaPONTE
SIZE: ANSI D
ISSUE DATE: 09 NOVEMBER 2021
SOLICITATION NO.:
CONTRACT NO.:
FILE NO.: E-86-14-22

U.S. ARMY CORPS OF ENGINEERS
SEATTLE DISTRICT
SEATTLE, WASHINGTON

FY25 P2-488932-HAHDFPF
HOWARD A HANSON DAM FISH PASSAGE FACILITY
GREEN RIVER, WASHINGTON

SYMBOLS, ABBREVIATIONS AND GENERAL NOTES

SHEET ID
G-003

DRAFT FEASIBILITY DESIGN

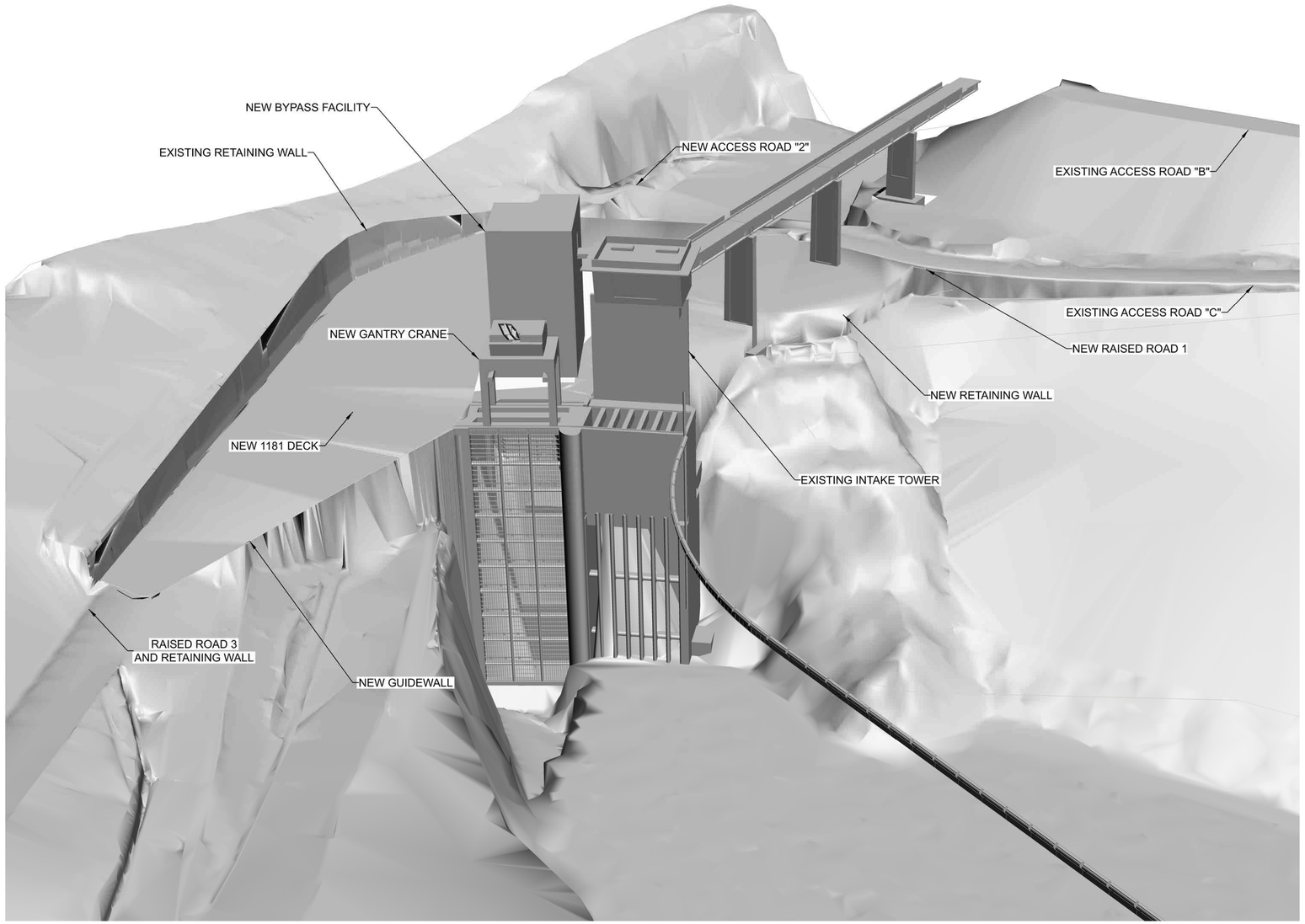

A1 ISOMETRIC FRONT VIEW
SCALE: NTS

US Army Corps of Engineers®

MARK	DESCRIPTION	DATE

U.S. ARMY CORPS OF ENGINEERS
SEATTLE DISTRICT
SEATTLE, WASHINGTON

DESIGNED BY:
DRAWN BY:
CHECKED BY:
SUBMITTED BY: KATHERINE LAFONTE
SIZE: %OPTION 2%
ISSUE DATE: 09 NOVEMBER 2021
SOLICITATION NO.:
CONTRACT NO.:
FILE NO.: E-56-14-22
%OPTIONAL VALUE 2%

FY25 P2-488932-HAHDFPF
HOWARD A HANSON DAM FISH PASSAGE FACILITY
GREEN RIVER, WASHINGTON

ISOMETRIC FRONT VIEW

SHEET ID
G-004

DRAFT FEASIBILITY DESIGN

FILE PATH: %PRODUCTION DATA 1%
PLOT DATE: %PRODUCTION DATA 2%

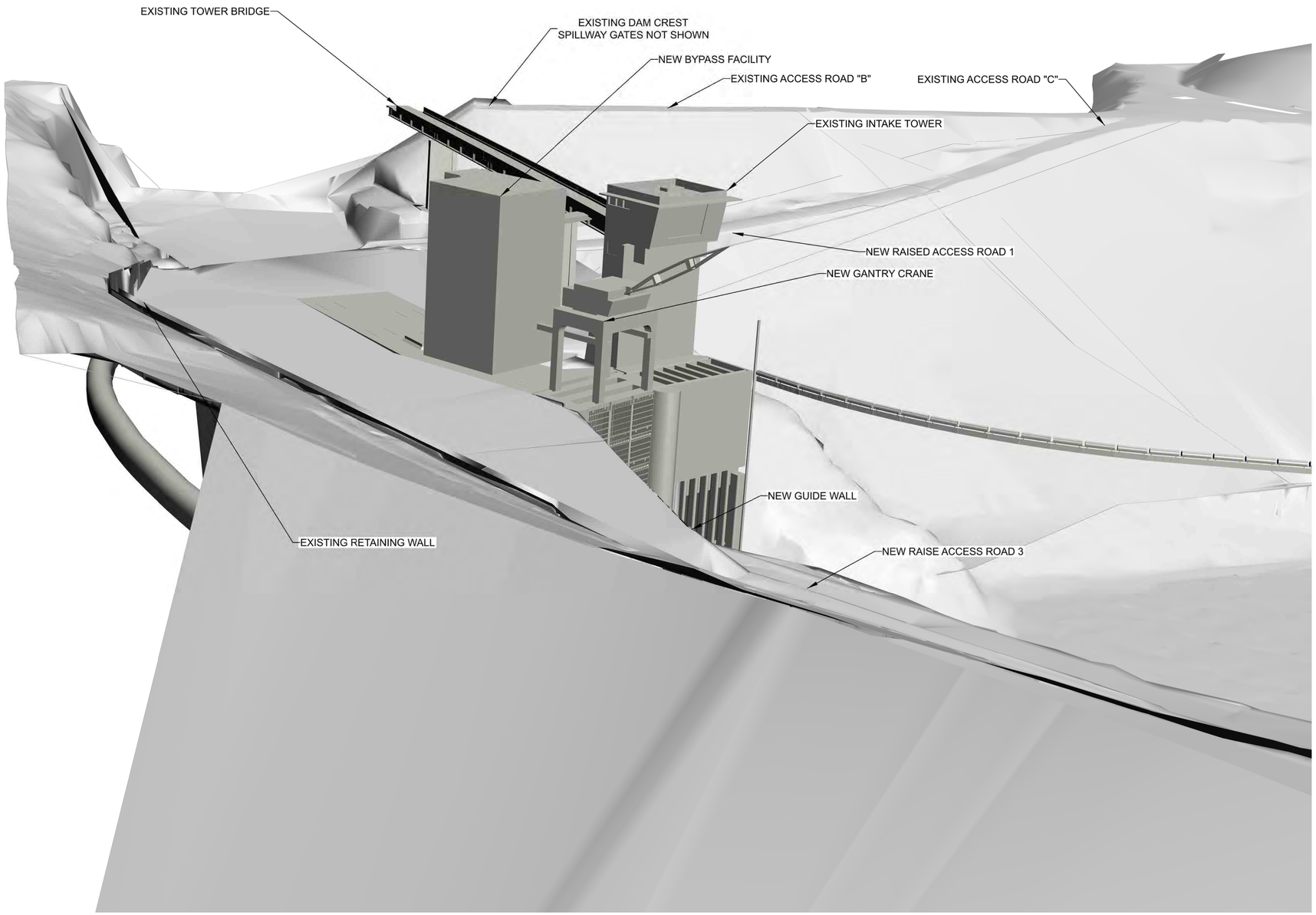

A1 ISOMETRIC SIDE VIEW
SCALE: NTS

US Army Corps of Engineers®

MARK	DESCRIPTION	DATE

DESIGNED BY:
DRAWN BY:
CHECKED BY:
SUBMITTED BY: KATHERINE LAFONTE
SIZE: %OPTION 2%
ISSUE DATE: 09 NOVEMBER 2021
SOLICITATION NO.:
CONTRACT NO.:
FILE NO.: E-56-14-22
%OPTIONAL VALUE 2%

U.S. ARMY CORPS OF ENGINEERS
SEATTLE DISTRICT
SEATTLE, WASHINGTON

FY25 P2-488932-HAHDFPF
HOWARD A HANSON DAM FISH PASSAGE FACILITY
GREEN RIVER, WASHINGTON

ISOMETRIC SIDE VIEW

SHEET ID
G-005

DRAFT FEASIBILITY DESIGN

FILE PATH: %PRODUCTION DATA 1%
PLOT DATE: %PRODUCTION DATA 2%

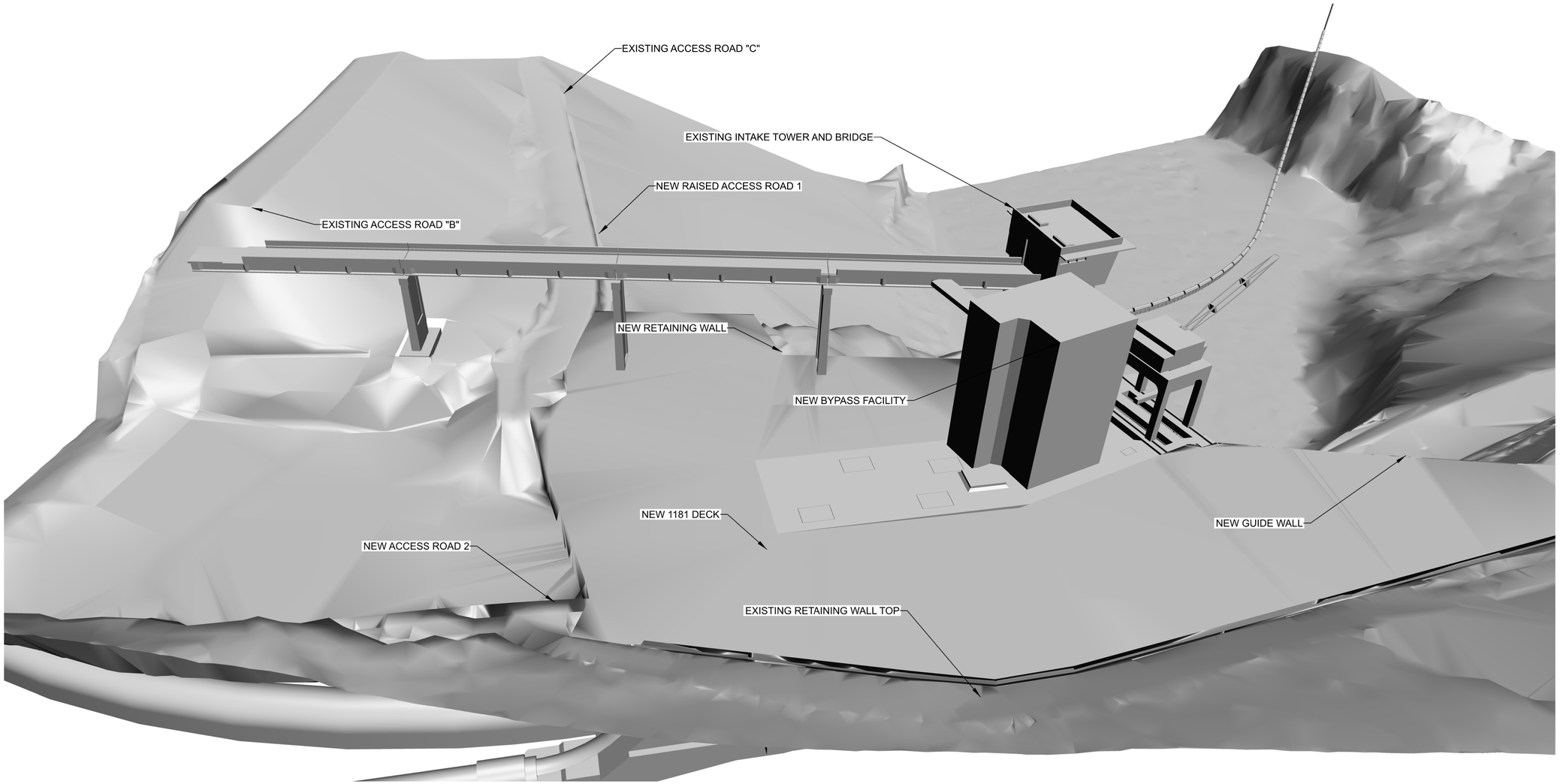

A1 OBLIQUE ISOMETRIC

SCALE: NTS

US Army Corps of Engineers®

MARK	DESCRIPTION	DATE

DESIGNED BY:
DRAWN BY:
CHECKED BY:
SUBMITTED BY: KATHERINE LaFONTE
SIZE: %OPTIONAL VALUE 2%
ISSUE DATE: 09 NOVEMBER 2021
SOLICITATION NO.:
CONTRACT NO.:
FILE NO.: E-86-14-22
%OPTIONAL VALUE 2%

U.S. ARMY CORPS OF ENGINEERS
SEATTLE DISTRICT
SEATTLE, WASHINGTON

FY25 P2-488932-HAHDFPF
HOWARD A HANSON DAM FISH PASSAGE FACILITY
GREEN RIVER, WASHINGTON

ISOMETRIC OBLIQUE VIEW

SHEET ID

G-006

DRAFT FEASIBILITY DESIGN

FILE PATH: %PRODUCTION DATA 1%
PLOT DATE: %PRODUCTION DATA 2%

A1 CONSTRUCTION LIMITS SITE PLAN

SCALE: 1"=200'

US Army Corps of Engineers®

MARK	DESCRIPTION	DATE

DESIGNED BY: KATO
DRAWN BY: KATO
CHECKED BY: SKRINDE
SUBMITTED BY: KATHERINE LaPONTE
SIZE: ANSI D

ISSUE DATE: 09 NOVEMBER 2021
SOLICITATION NO.:
CONTRACT NO.:
FILE NO.: E-S6-14-22

U.S. ARMY CORPS OF ENGINEERS
SEATTLE DISTRICT
SEATTLE, WASHINGTON

FY25 P2-488932-HAHDFPF
HOWARD A HANSON DAM FISH PASSAGE FACILITY
GREEN RIVER, WASHINGTON

CONSTRUCTION LIMITS
SITE PLAN

SHEET ID

G-101

DRAFT FEASIBILITY DESIGN

FILE PATH: pw://PWINT-WPC.EIS.DS.USACE.ARMY.MIL:CENWS - Seattle District/Documents/Civil Works/Howard Hanson Dam, WA/FY25_P2-488932_HAHDFPF/Plan Sets/03_Sheets/Civil/G-101 CONSTRUCTION LIMITS SITE PLAN
PLOT DATE: 12:19:58 PM 2/5/2022

A1 STAGING AREAS SITE PLAN

SCALE: 1"=200'

GENERAL SHEET NOTES

1. ALL WORK SHALL BE AT THE HOWARD A. HANSON DAM (HAHD) THAT IS ABOUT 35 MILES EAST OF TACOMA, WASHINGTON.ACCESS TO THE DAM IS RESTRICTED. THE CONTRACTOR SHALL OBTAIN ALL TRAINING AND COMPLY WITH ALL ACCESS REQUIREMENTS BY THE CITY OF TACOMA AND THE USACE. THE PRIMARY ACCESS ROAD TO THE PROJECT SITE IS A TWO LANE GRAVEL ROAD THAT IS USED BY LOGGING TRUCKS. SNOW, ICE, AND MUD ARE COMMON IN THE WATERSHED DURING THE WINTER AND EARLY SPRING MONTHS.

2. THE CONTRACTOR SHALL COMPLY WITH THE ACCESS ROUTES SHOWN ON THE DRAWINGS. THE CONTRACTOR SHALL NOT ACCESS THE WORK SITE THROUGH THE ADMINISTRATION BUILDING ENTRANCES AT ANY TIME WITHOUT APPROVAL BY THE DAM SITE MANAGER NOR SHALL THE CONTRACTOR PARK ANY VEHICLES AT THE ADMINISTRATION BUILDING.

3. RADIO COMMUNICATION ON CB BANDS FOR ALL VEHICLES IS MANDATORY FOR TRAVEL ALONG THE ACCESS ROAD TO THE DAM. CELL PHONE RECEPTION IS POOR TO NONEXISTENT AT THE PROJECT SITE. SATELLITE PHONES SHALL BE REQUIRED FOR COMMUNICATION WITH THE CONTRACTOR MAIN OFFICE. HANDHELD RADIOS SHALL BE REQUIRED FOR COMMUNICATION BETWEEN CREWS WHILE ON-SITE. LANDLINE TELEPHONES AT THE HAHD PROJECT OFFICE SHALL NOT BE USED BY THE CONTRACTOR EXCEPT IN THE EVENT OF AN EMERGENCY. SATELLITE SERVICE IS LIMITED TO CERTAIN ZONES AROUND THE VICINITY OF THE ADMINISTRATION BUILDING. ALL COMMUNICATION DEVICES SHALL BE TESTED FOR OPERATIONAL ACCESSIBILITY OF SIGNAL INITIALLY AND PERIODICALLY OVER THE COURSE OF THE CONTRACT. THE CONTRACTOR SHALL FURNISH AT LEAST ONE COMPATIBLE COMMUNICATION DEVICE TO THE GOVERNMENT REPRESENTATIVE ON SITE.

4. THE USACE AND CITY OF TACOMA SHALL IDENTIFY A SUITABLE LAY-DOWN, WORK SUPPORT, AND STAGING AREA FOR THE CONTRACTOR AS CLOSE AS POSSIBLE TO THE PROJECT SITE. FOR THIS WORK, IT IS ASSUMED THE CONTRACTOR SHALL BE ABLE TO USE THE SPACE AT THE 3-1/2 MILE SITE. LIMITED SPACE MAY BE AVAILABLE ALONG ACCESS ROAD 'A' (NF 54) NORTH OF THE OLD ADMINISTRATION BUILDING.

5. THE CONTRACTOR SHALL PROVIDE AN OFFICE TRAILER FOR THE WORK CREWS. DUE TO NARROW ROADS AND LIMITED TURNING RADIUS OF THE ROAD, MORE THAN ONE MEDIUM TO SMALL TRAILER MAY BE REQUIRED IN LIEU OF A SINGLE LARGE OFFICE TRAILER.TRAILER SPACE MAY BE AVAILABLE AT THE 3-1/2 MILE SITE. CONTRACTOR SHALL COORDINATE WITH USACE AND CITY OF TACOMA.

6. DUE TO SITE CONSTRAINTS, PARKING SPACE IS LIMITED, DESIGNATED PARKING AREAS NEAR THE WORK SITE SHALL BE RESTRICTED TO NECESSARY VEHICLES ONLY. PARKING IS AVAILABLE AT THE TACOMA HEADWORKS LOT FOR PERSONAL AND NON-ESSENTIAL VEHICLES.

7. THE CONTRACTOR SHALL NOT BLOCK ANY EXISTING GATES OR ACCESS WITHOUT COORDINATING WITH THE USACE COR. ROAD BLOCKAGES SHALL BE MINIMIZED TO REDUCE DISRUPTION TO DAM OPERATIONS AND OTHER CONSTRUCTION PROJECTS AROUND THE DAM. AT LEAST ONE ACCESS ROAD ACROSS THE DAM SHALL REMAIN OPEN AT ALL TIMES.

8. THE CONTRACTOR SHALL BE ABLE TO PROVIDE AND MAINTAIN PORTABLE LIGHT PLANTS WHEREVER CREWS ARE WORKING FOR REQUIRED SAFETY ILLUMINATION THAT SHALL OPERATE FROM DUSK TO DAWN, OR TO THE HOUR THAT WORK IS COMPLETED AT NIGHT. LIGHT PLANTS SHALL BE 6KW MINIMUM OUTPUT WITH LIGHT MAST.

9. BASIC FIRE FIGHTING AND SUPPRESSION EQUIPMENT IS REQUIRED FOR WORK IN FOREST AREAS FOR EACH DRILLING SITE AND VEHICLE. WORK SITE AND THE DISPOSAL SITE.

10. LOCAL VEHICLE PARKING AVAILABLE AS SHOWN.

11. AREA NOTES AS DROP SITE FOR DROPPING OFF MATERIALS TO BE MOVED ON-SITE.

12. AREAS NOTED AS TACOMA WATER IS CONTROLLED BY THE CITY OF TACOMA, AND SHALL BE COORDINATED WITH TACOMA WATER PRIOR TO USAGE.

13. AREAS NOTED AS NO STAGING, NO STAGING ALLOWED.

14. ALL OTHER STAGING AREAS SHALL BE COORDINATED WITH THE DAM OPERATIONS.

15. SEDIMENT RETENTION PONDS REQUIRE RE-HABILITATION AND POSSIBLY RE-CONSTRUCTION.

US Army Corps of Engineers®

MARK	DESCRIPTION	DATE

DESIGNED BY: KATO
DRAWN BY: KATO
CHECKED BY: SKRINDE
SUBMITTED BY: KATHERINE LaPOINTE
ISSUE DATE: 09 NOVEMBER 2021
SOLICITATION NO.:
CONTRACT NO.:
FILE NO.: E-36-14-22
SIZE: ANSI D

U.S. ARMY CORPS OF ENGINEERS
SEATTLE DISTRICT
SEATTLE, WASHINGTON

FY25 P2-488932-HAHDFPF
HOWARD A HANSON DAM FISH PASSAGE FACILITY
GREEN RIVER, WASHINGTON

STAGING AREAS
SITE PLAN

SHEET ID
G-102

DRAFT FEASIBILITY DESIGN

FILE PATH: pw://PWINT-WPC.EIS.DS.USACE.ARMY.MIL:CENWS - Seattle District/Documents/Civil Works/Howard Hanson Dam, WA/FY25_P2-488932_HAHDFPF/Plan Sets/03_Sheets/Civil/G-102 STAGING AREAS SITE PLAN
PLOT DATE: 9:44:38 AM 2/4/2022

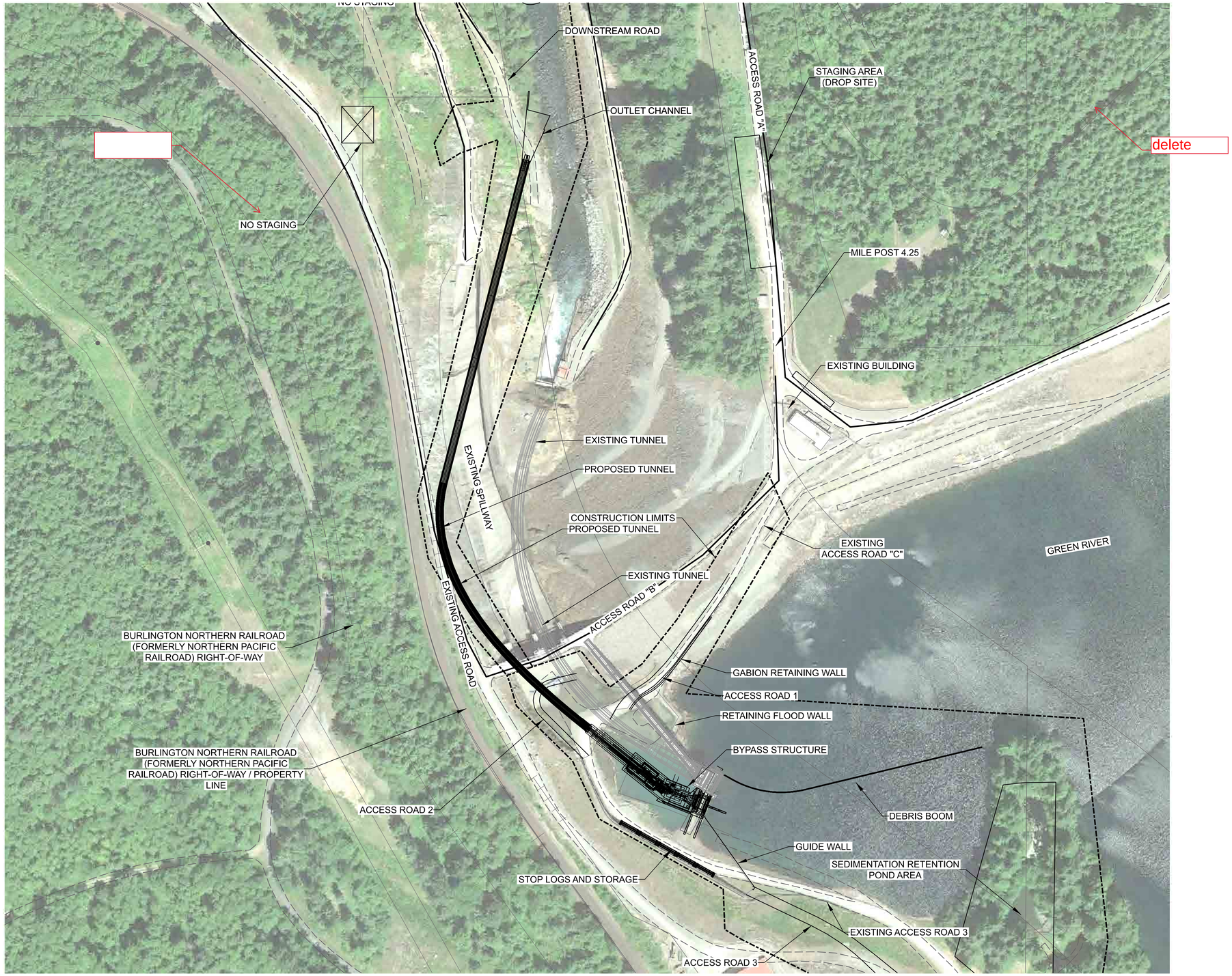

A1 GENERAL SITE PLAN
SCALE: 1"=100'

US Army Corps of Engineers®

MARK	DESCRIPTION	DATE

U.S. ARMY CORPS OF ENGINEERS
SEATTLE DISTRICT
SEATTLE, WASHINGTON

DESIGNED BY: KATO
DRAWN BY: KATO
CHECKED BY: SKRINDE
SUBMITTED BY: KATHERINE LaPONTE
SCALE: ANSI D
ISSUE DATE: 09 NOVEMBER 2021
SOLICITATION NO.:
CONTRACT NO.:
FILE NO.: E-56-14-22

FY25 P2-488932-HAHDFPF
HOWARD A HANSON DAM FISH PASSAGE FACILITY
GREEN RIVER, WASHINGTON

GENERAL SITE PLAN

SHEET ID
G-103

DRAFT FEASIBILITY DESIGN

FILE PATH: ...\...\FY22_P2-474522_DER\...\FY25_P2-488932_HAHDFPF-G-103 GENERAL SITE PLAN.dgn
PLOT DATE: 8:09:44 AM 3/23/2022

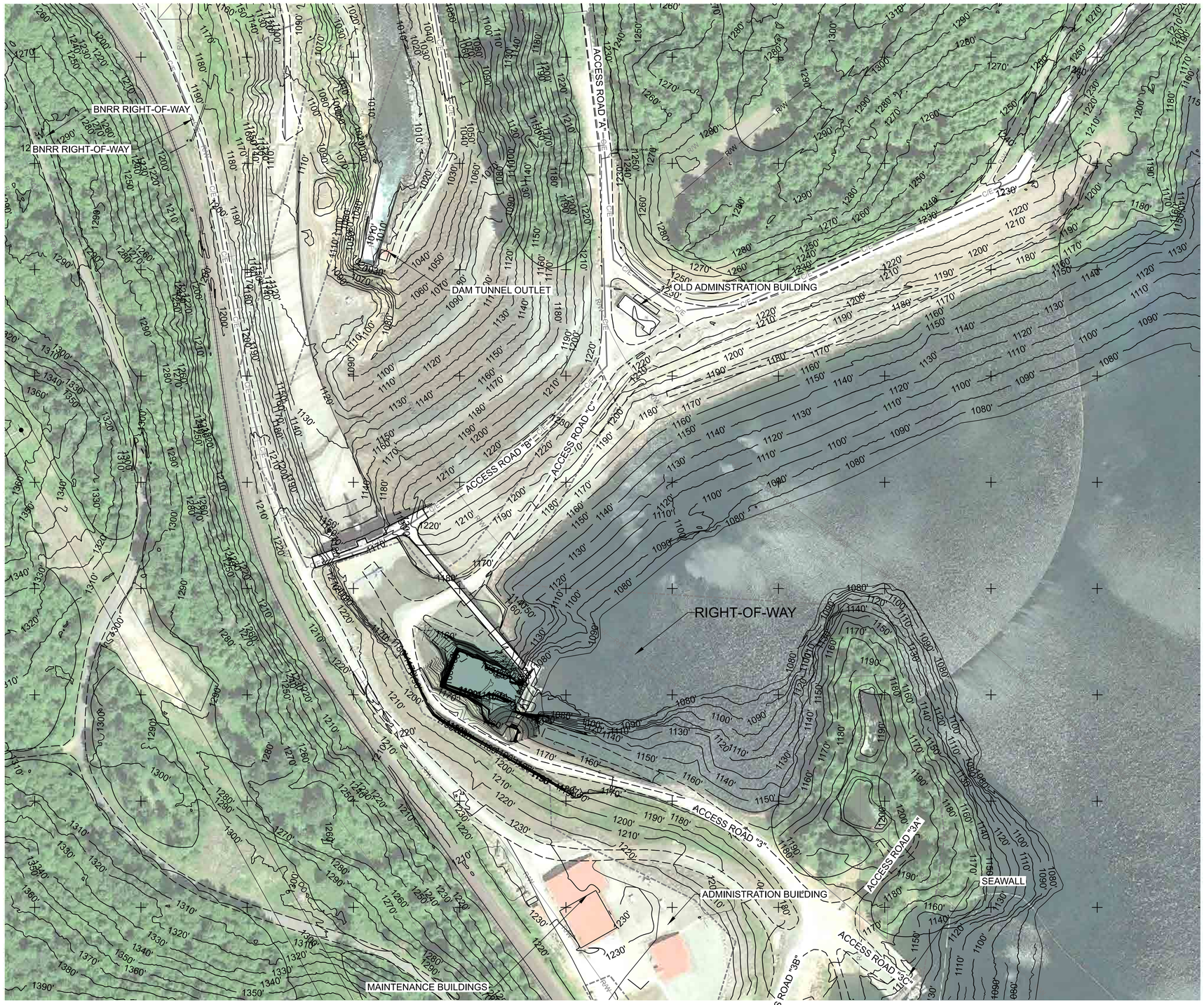

A1 EXISTING SITE CONDITIONS

SCALE: 1"=100'

US Army Corps of Engineers®

MARK	DESCRIPTION	DATE

DESIGNED BY: KATO
DRAWN BY: KATO
CHECKED BY: SKRINDE
SUBMITTED BY: KATHERINE LaPONTE
SIZE: ANSI D
ISSUE DATE: 09 NOVEMBER 2021
SOLICITATION NO.:
CONTRACT NO.:
FILE NO.: E-36-14-22

U.S. ARMY CORPS OF ENGINEERS
SEATTLE DISTRICT
SEATTLE, WASHINGTON

FY25 P2-488932-HAHDFPF
HOWARD A HANSON DAM FISH PASSAGE FACILITY
GREEN RIVER, WASHINGTON

EXISTING SITE CONDITIONS
SITE PLAN

SHEET ID
G-104

DRAFT FEASIBILITY DESIGN

FILE PATH: pw://PWINT-WPC.EIS.DS.USACE.ARMY.MIL:CENWS - Seattle District/Documents/Civil Works/Howard Hanson Dam, WA/FY25_P2-488932_HAHDFPF/Plan Sets/03_Sheets/Civil/G-104 EXISTING SITE CONDITIONS SITE PLAN
PLOT DATE: 12:42:29 PM 2/5/2022

A1 STRUCTURE EXCAVATION PLAN

SCALE: 1"=20'

0 20' 40'

US Army Corps of Engineers®

MARK	DESCRIPTION	DATE

DESIGNED BY:
DRAWN BY:
CHECKED BY:
SUBMITTED BY: KATHERINE LaPONTE
SIZE:
ISSUE DATE: 09 NOVEMBER 2021
SOLICITATION NO.:
CONTRACT NO.:
FILE NO.: E-56-14-22

U.S. ARMY CORPS OF ENGINEERS
SEATTLE DISTRICT
SEATTLE, WASHINGTON

FY25 P2-488932-HAHDFPF
HOWARD A HANSON DAM FISH PASSAGE FACILITY
GREEN RIVER, WASHINGTON

STRUCTURE EXCAVATION PLAN

SHEET ID

DRAFT FEASIBILITY DESIGN

FILE PATH: pw://PWINT-WPC.EIS.DS.USACE.ARMY.MIL:CENWS - Seattle District/Documents/Civil Works/Howard Hanson Dam, WA/FY25_P2-488932_HAHDFPF/Plan Sets/03_Sheets/Civil/Structure Excavation Plan.dgn
PLOT DATE: 11:04:28 AM 11/16/2021

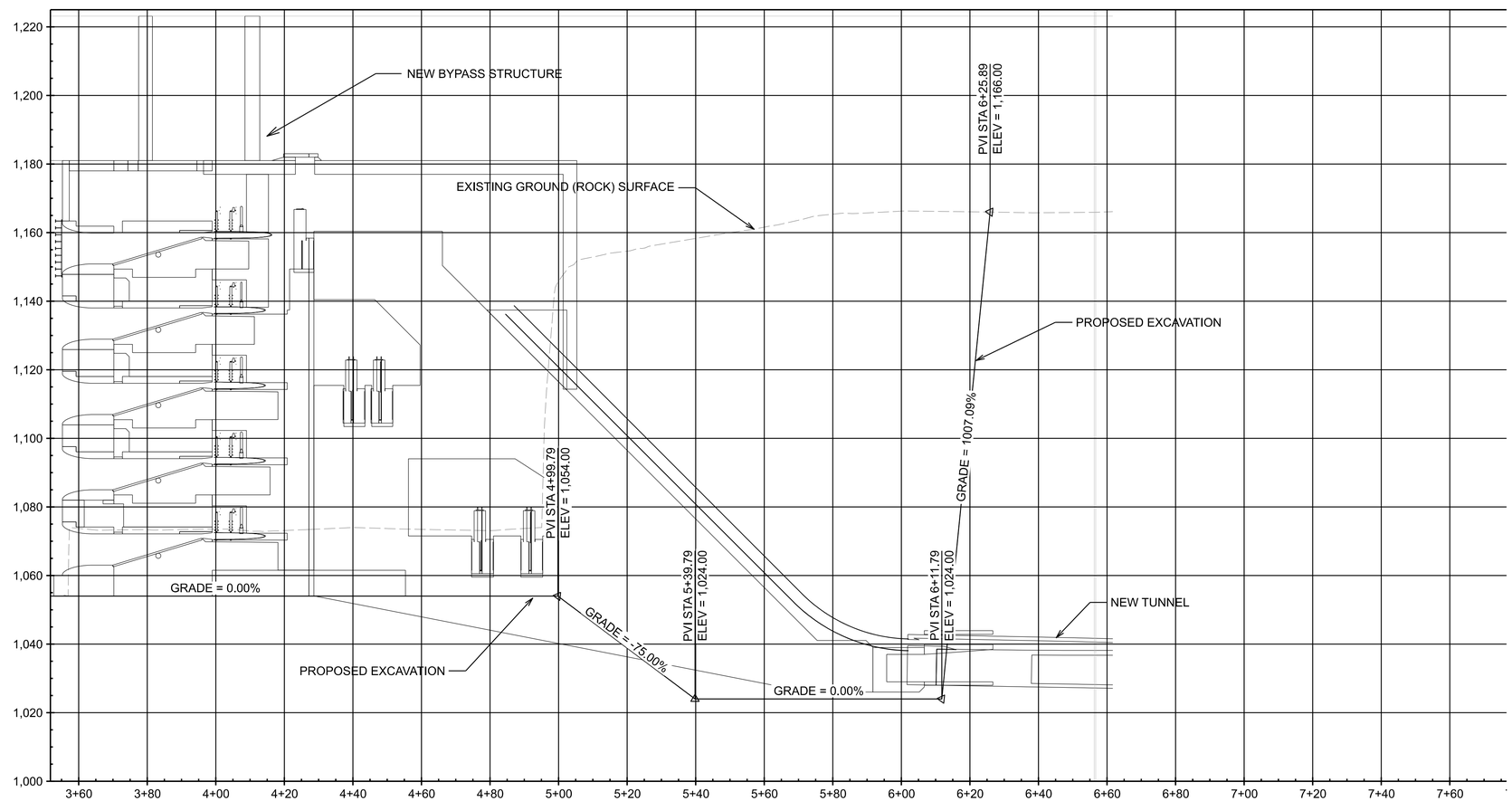

A1 STRUCTURAL EXCAVATION PROFILE

SCALE: 1"=20'

HORIZONTAL: 0 20' 40' VERTICAL: 0 20' 40'

US Army Corps of Engineers®

MARK	DESCRIPTION	DATE

DESIGNED BY:
DRAWN BY:
CHECKED BY:
SUBMITTED BY: KATHERINE LaPONTE
SIZE:
ISSUE DATE: 09 NOVEMBER 2021
SOLICITATION NO.:
CONTRACT NO.:
FILE NO.: E-36-14-22

U.S. ARMY CORPS OF ENGINEERS
SEATTLE DISTRICT
SEATTLE, WASHINGTON

FY25 P2-488932-HAHDFPF
HOWARD A HANSON DAM FISH PASSAGE FACILITY
GREEN RIVER, WASHINGTON

STRUCTURAL EXCAVATION PROFILE

SHEET ID
G-119

DRAFT FEASIBILITY DESIGN

FILE PATH: pw://PWINT-WPC.EIS.DS.USACE.ARMY.MIL:CENWS - Seattle District/Documents/Civil Works/Howard Hanson Dam, WA/FY25_P2-488932_HAHDFPF/Plan Sets/03_Sheets/Civil/Structure Excavation Profile.dgn
PLOT DATE: 5:45:01 PM 11/29/2021

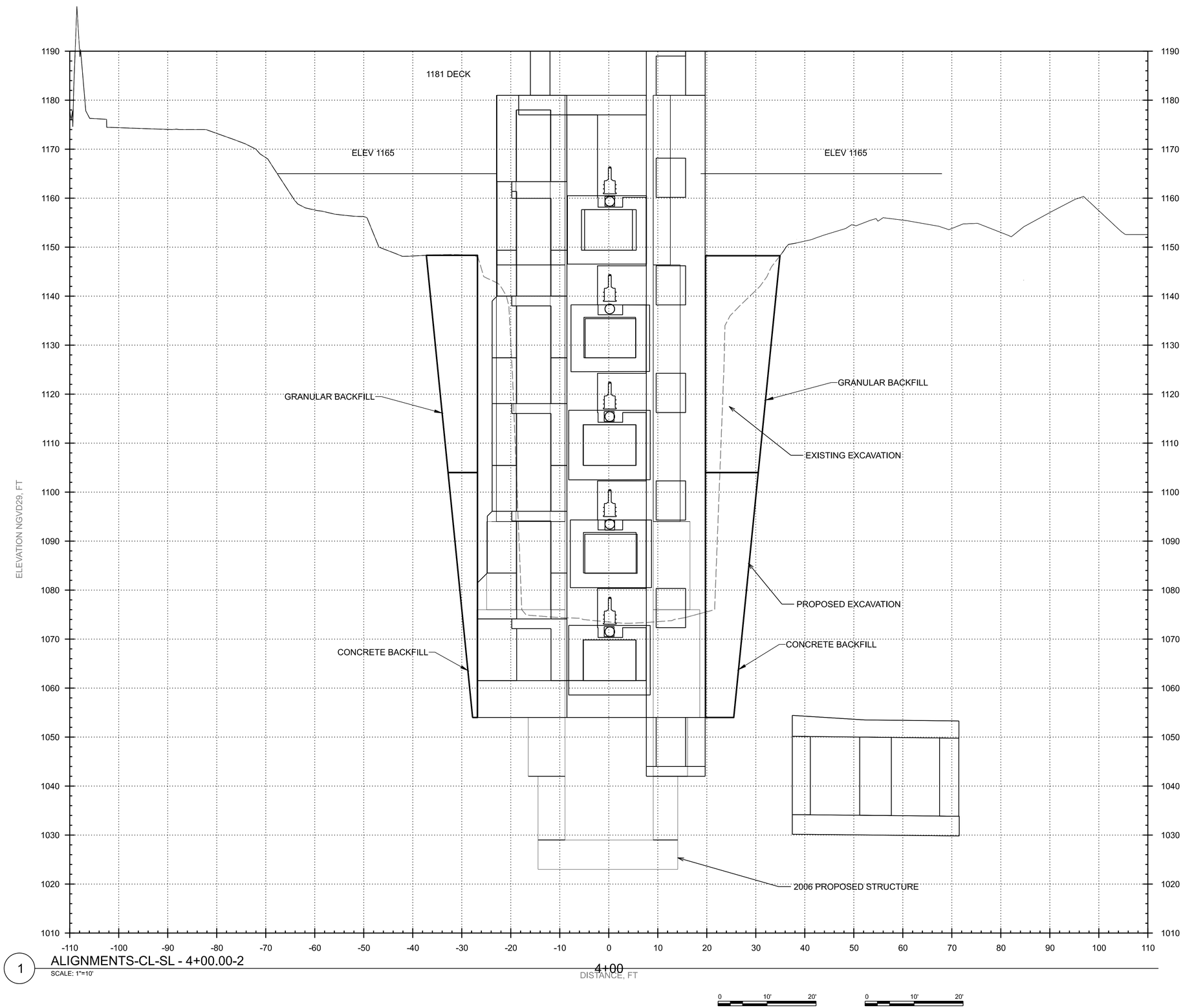

1 ALIGNMENTS-CL-SL - 4+00.00-2

SCALE: 1"=10'

US Army Corps of Engineers®

MARK	DESCRIPTION	DATE

DESIGNED BY:
DRAWN BY:
CHECKED BY:
SUBMITTED BY:
SIZE:
ISSUE DATE:
SOLICITATION NO.:
CONTRACT NO.:
E-56-14-22

U.S. ARMY CORPS OF ENGINEERS
SEATTLE DISTRICT
SEATTLE, WASHINGTON

FY25 P2-488932-HAHDFPF
HOWARD A HANSON DAM FISH PASSAGE FACILITY
GREEN RIVER, WASHINGTON

STRUCTURE EXCAVATION
SECTION 4+00

SHEET ID

35% DESIGN SUBMITTAL

FILE PATH: pw://PWINT-WPC.EIS.DS.USACE.ARMY.MIL:CENWS - Seattle District/Documents/Civil Works/Howard Hanson Dam, WA/FY25_P2-488932_HAHDFPF/Plan Sets/03_Sheets/Civil/Structure Excavation 4+00.dgn
PLOT DATE: 11:46:24 AM 10/26/2021

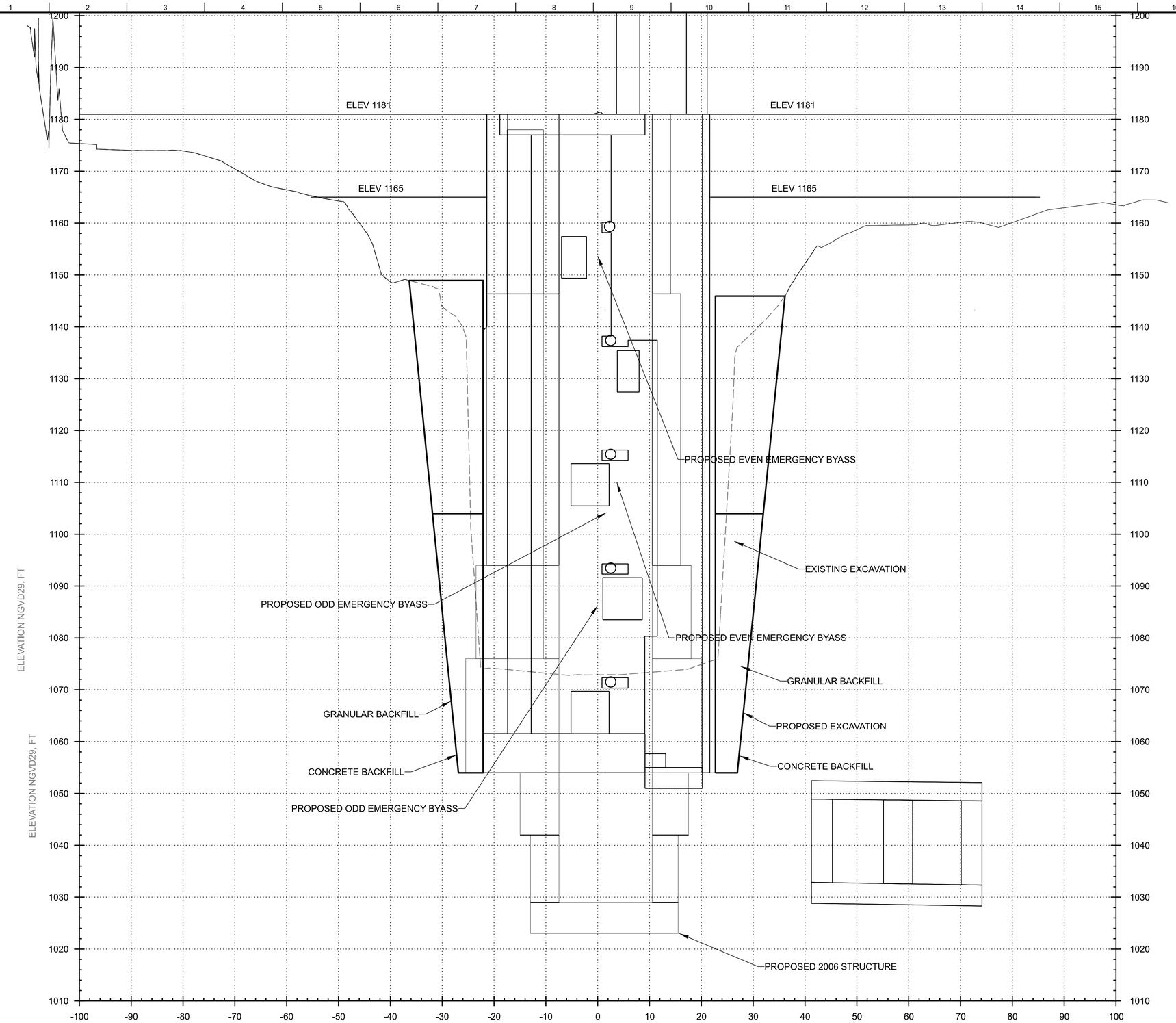

1 ALIGNMENTS-CL-SL - 4+15.00

SCALE: 1"=10'

4+15

0 10' 20'

0 10' 20'

US Army Corps of Engineers®

MARK	DESCRIPTION	DATE

DESIGNED BY:
DRAWN BY:
CHECKED BY:
SUBMITTED BY:
SIZE:

ISSUE DATE:
SOLICITATION NO.:
CONTRACT NO.:
E-56-14-22

U.S. ARMY CORPS OF ENGINEERS
SEATTLE DISTRICT
SEATTLE, WASHINGTON

FY25 P2-488932-HAHDFPF
HOWARD A HANSON DAM FISH PASSAGE FACILITY
GREEN RIVER, WASHINGTON

STRUCTURE EXCAVATION
SECTION 4+15

SHEET ID

35% DESIGN SUBMITTAL

FILE PATH: pw://PWINT-WPC.EIS.DS.USACE.ARMY.MIL:CENWS - Seattle District/Documents/Civil Works/Howard Hanson Dam, WA/FY25_P2-488932_HAHDFPF/Plan Sets/03_Sheets/Civil/Structure Excavation 4+15.dgn

PLOT DATE: 9:49:06 AM 11/4/2021

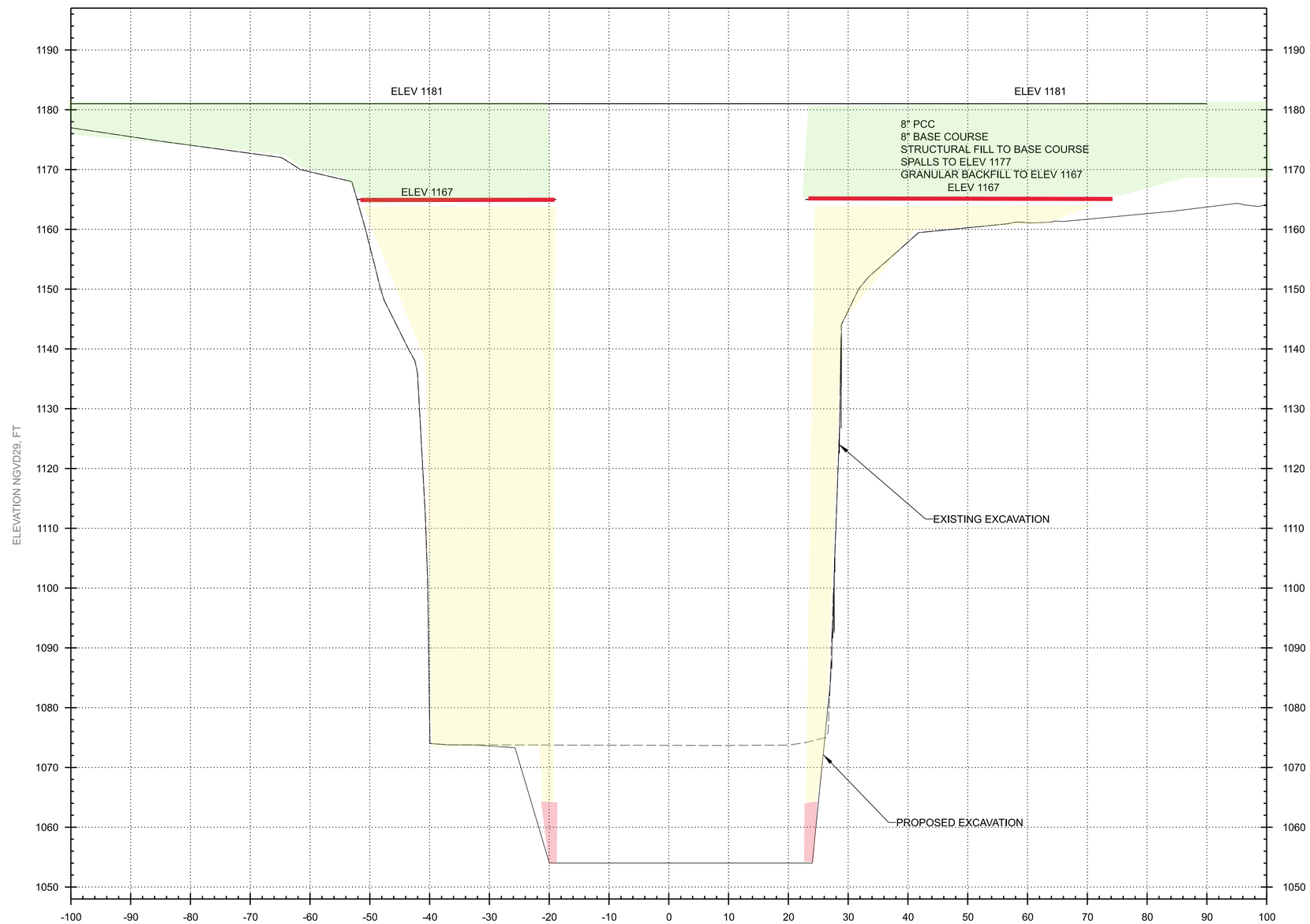

A1 CROSS SECTION 4+50

SCALE: 1"=10'

HORIZONTAL: 0 10' 20'

VERTICAL: 0 10' 20'

US Army Corps of Engineers®

MARK	DESCRIPTION	DATE

DESIGNED BY:
DRAWN BY:
CHECKED BY:
SUBMITTED BY: KATHERINE LaPOINTE
SIZE:
ISSUE DATE: 09 NOVEMBER 2021
SOLICITATION NO.:
CONTRACT NO.:
FILE NO.: E-36-14-22

U.S. ARMY CORPS OF ENGINEERS
SEATTLE DISTRICT
SEATTLE, WASHINGTON

FY25 P2-488932-HAHDFPF
HOWARD A HANSON DAM FISH PASSAGE FACILITY
GREEN RIVER, WASHINGTON

STRUCTURE EXCAVATION
SECTION 4+50

SHEET ID

DRAFT FEASIBILITY DESIGN

FILE PATH: pw://PWINT-WPC.EIS.DS.USACE.ARMY.MIL:CENWS - Seattle District/Documents/Civil Works/Howard Hanson Dam, WA/FY25_P2-488932_HAHDFPF/Plan Sets/03_Sheets/Civil/Structure Excavation 4+50.dgn
PLOT DATE: 7:15:54 AM 11/23/2021

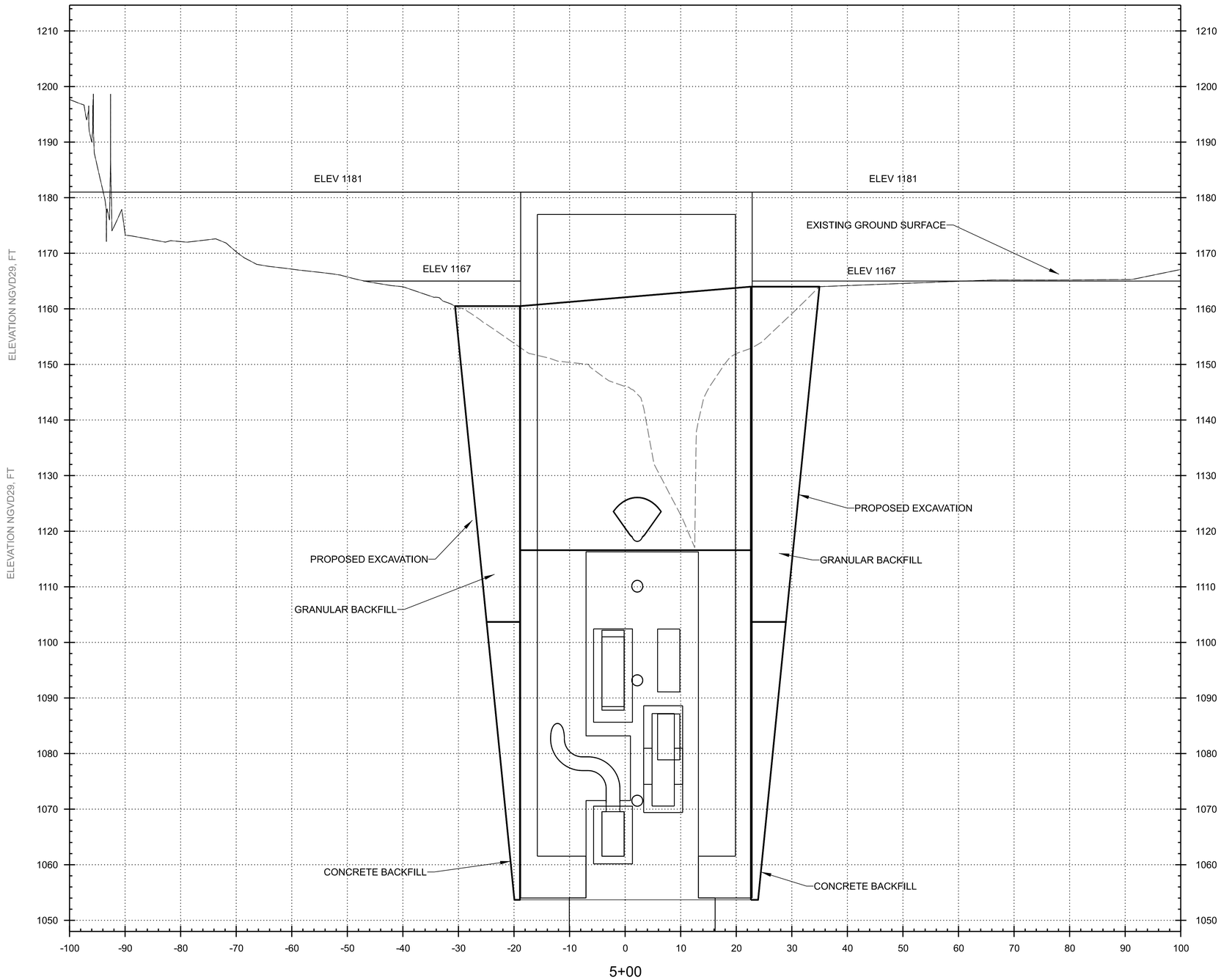

1 ALIGNMENTS-CL-SL - 5+00.00

SCALE: 1"=10'

0 10' 20'

0 10' 20'

US Army Corps of Engineers®

MARK	DESCRIPTION	DATE

DESIGNED BY:
DRAWN BY:
CHECKED BY:
SUBMITTED BY:
SIZE:
ISSUE DATE:
SOLICITATION NO.:
CONTRACT NO.:
E-56-14-22

U.S. ARMY CORPS OF ENGINEERS
SEATTLE DISTRICT
SEATTLE, WASHINGTON

FY25 P2-488932-HAHDFPF
HOWARD A HANSON DAM FISH PASSAGE FACILITY
GREEN RIVER, WASHINGTON

STRUCTURE EXCAVATION
SECTION 5+00

SHEET ID

35% DESIGN SUBMITTAL

FILE PATH: pw://PWINT-WPC.EIS.DS.USACE.ARMY.MIL:CENWS - Seattle District/Documents/Civil Works/Howard Hanson Dam, WA/FY25_P2-488932_HAHDFPF/Plan Sets/03_Sheets/Civil/Structure Excavation 5+00.dgn

PLOT DATE: 11:51:50 AM 10/26/2021

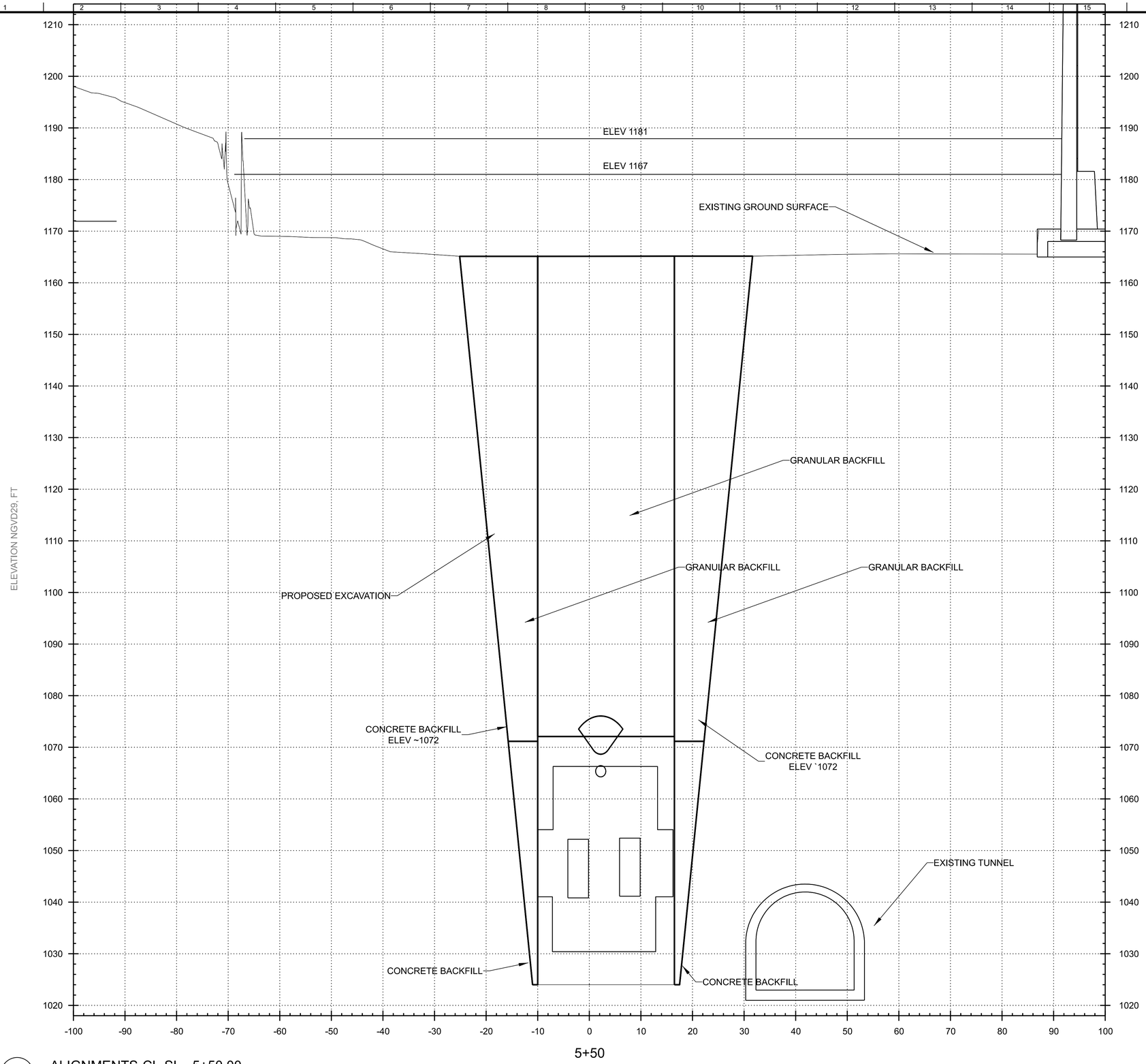

1 ALIGNMENTS-CL-SL - 5+50.00

SCALE: 1"=10'

US Army Corps of Engineers®

MARK	DESCRIPTION	DATE

DESIGNED BY:
DRAWN BY:
CHECKED BY:
SUBMITTED BY:
SIZE:
ISSUE DATE:
SOLICITATION NO.:
CONTRACT NO.:
E-56-14-22

U.S. ARMY CORPS OF ENGINEERS
SEATTLE DISTRICT
SEATTLE, WASHINGTON

FY25 P2-488932-HAHDFPF
HOWARD A HANSON DAM FISH PASSAGE FACILITY
GREEN RIVER, WASHINGTON

STRUCTURE EXCAVATION
SECTION 5+00

SHEET ID

35% DESIGN SUBMITTAL

FILE PATH: pw://PWINT-WPC.EIS.DS.USACE.ARMY.MIL:CENWS - Seattle District/Documents/Civil Works/Howard Hanson Dam, WA/FY25_P2-488932_HAHDFPF/Plan Sets/03_Sheets/Civil/Structure Excavation 5+50.dgn
PLOT DATE: 9:45:13 AM 11/4/2021

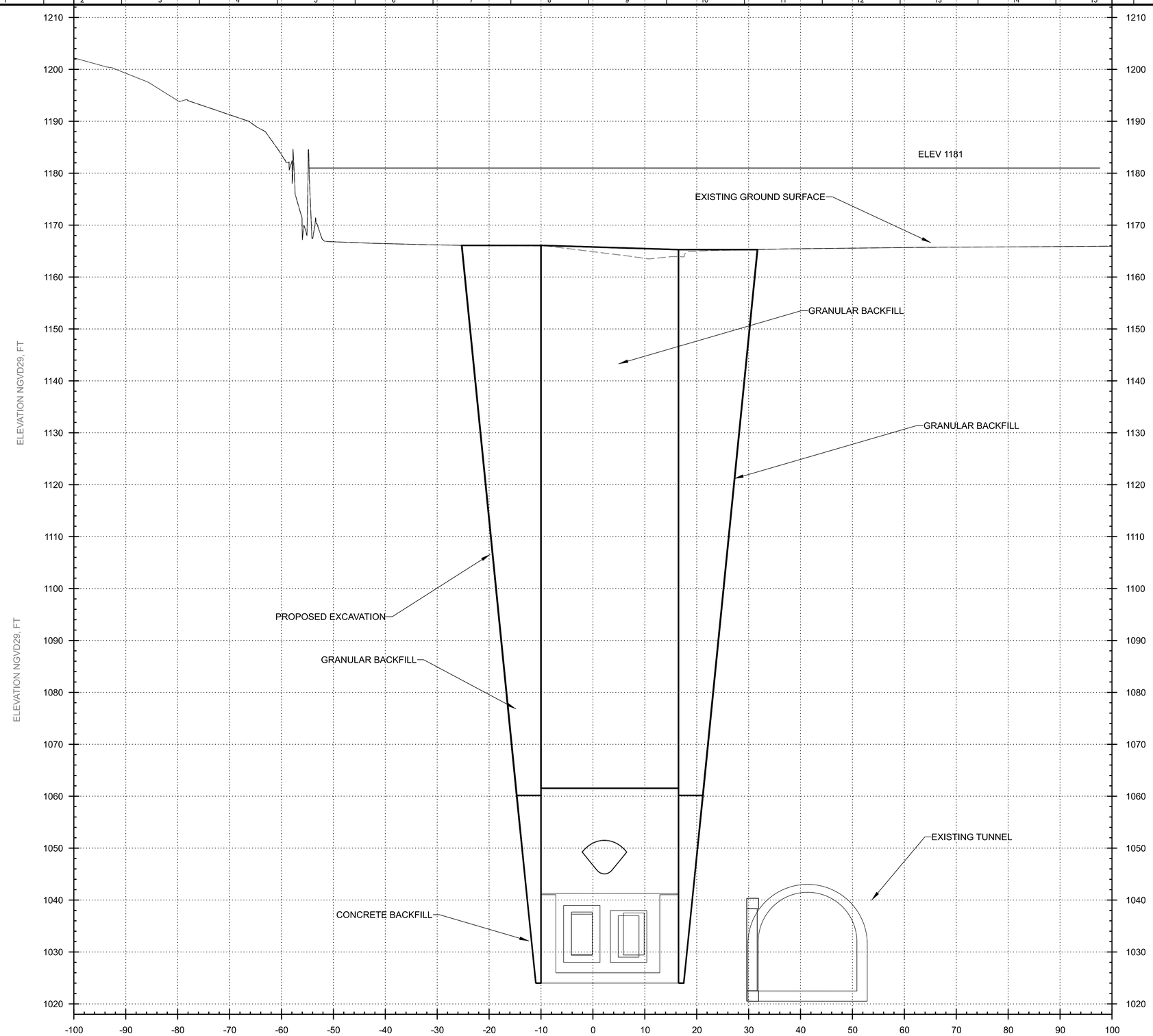

1 ALIGNMENTS-CL-SL - 5+75.00

SCALE: 1"=10'

US Army Corps of Engineers®

MARK	DESCRIPTION	DATE

DESIGNED BY:
DRAWN BY:
CHECKED BY:
SUBMITTED BY:
SIZE:
ISSUE DATE:
SOLICITATION NO.:
CONTRACT NO.:
E-56-14-22

U.S. ARMY CORPS OF ENGINEERS
SEATTLE DISTRICT
SEATTLE, WASHINGTON

FY25 P2-488932-HAHDFPF
HOWARD A HANSON DAM FISH PASSAGE FACILITY
GREEN RIVER, WASHINGTON

STRUCTURE EXCAVATION
SECTION 5+00

SHEET ID

35% DESIGN SUBMITTAL

FILE PATH: pw://PWINT-WPC.EIS.DS.USACE.ARMY.MIL:CENWS - Seattle District/Documents/Civil Works/Howard Hanson Dam, WA/FY25_P2-488932_HAHDFPF/Plan Sets/03_Sheets/Civil/Structure Excavation 5+75.dgn
PLOT DATE: 11:59:43 AM 10/26/2021

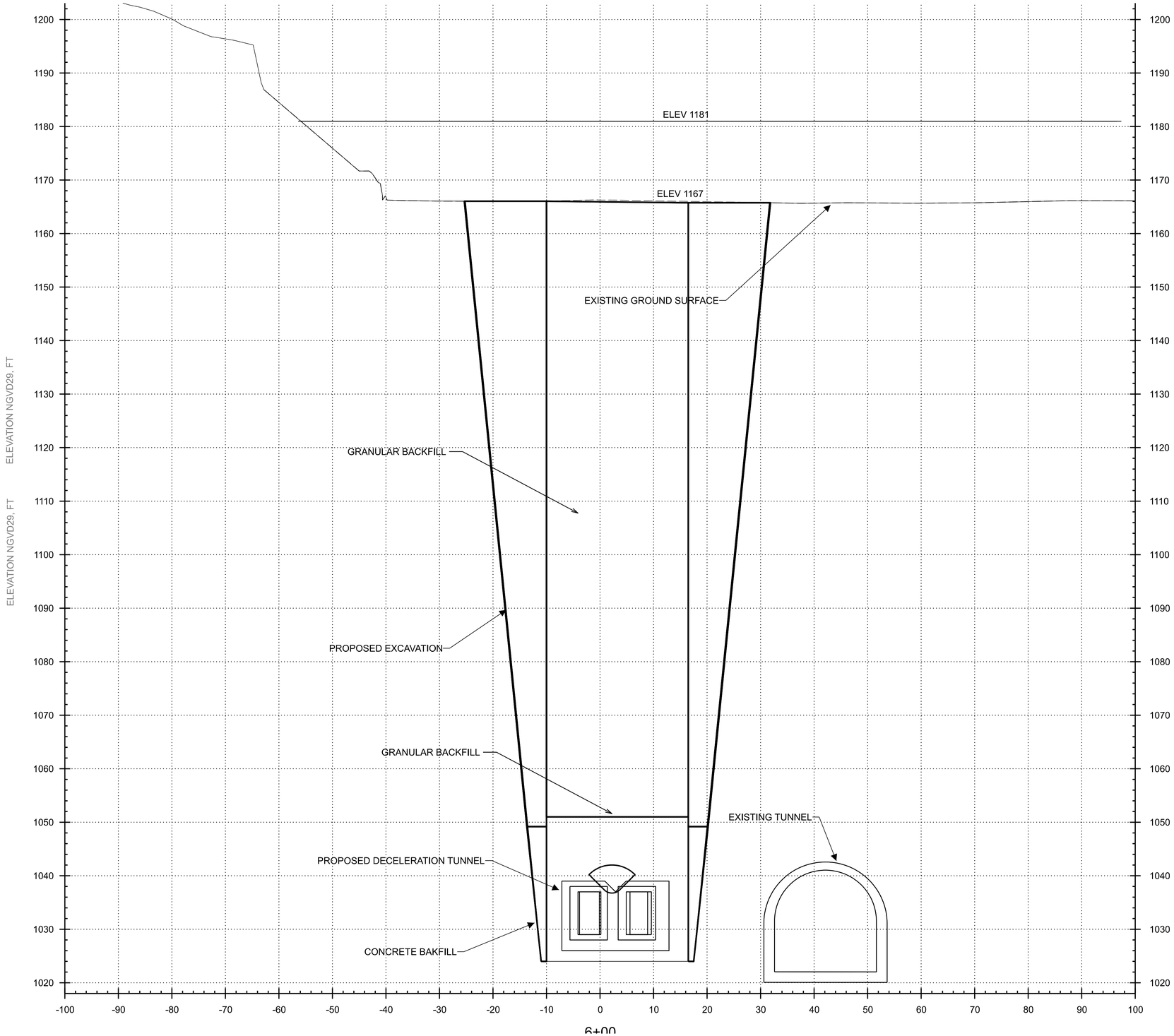

1 ALIGNMENTS-CL-SL - 6+00.00 [SHEET]

SCALE: 1"=1" FULL SIZE

US Army Corps of Engineers®

MARK	DESCRIPTION	DATE

DESIGNED BY:
DRAWN BY:
CHECKED BY:
SUBMITTED BY:
SIZE:
ISSUE DATE:
SOLICITATION NO.:
CONTRACT NO.:
E-56-14-22

U.S. ARMY CORPS OF ENGINEERS
SEATTLE DISTRICT
SEATTLE, WASHINGTON

FY25 P2-488932-HAHDFPF
HOWARD A HANSON DAM FISH PASSAGE FACILITY
GREEN RIVER, WASHINGTON

STRUCTURE EXCAVATION
SECTION 6+00

SHEET ID

35% DESIGN SUBMITTAL

FILE PATH: pw://PWINT-WPC.EIS.DS.USACE.ARMY.MIL:CENWS - Seattle District/Documents/Civil Works/Howard Hanson Dam, WA/FY25_P2-488932_HAHDFPF/Plan Sets/03_Sheets/Civil/Structure Excavation 6+00.dgn
PLOT DATE: 11:58:28 AM 10/26/2021

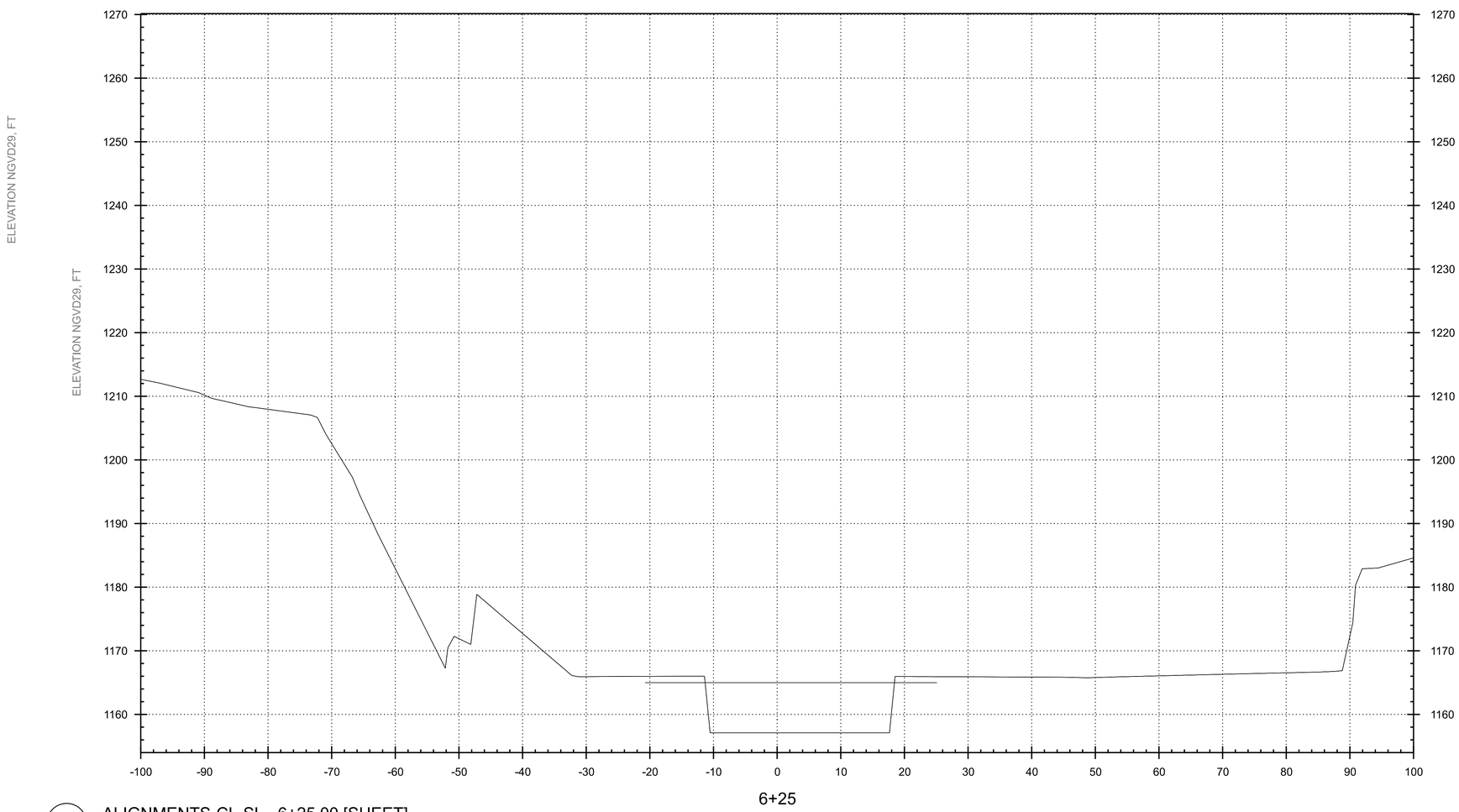

2 ALIGNMENTS-CL-SL - 6+25.00 [SHEET]

SCALE: 1"=1" FULL SIZE

US Army Corps of Engineers®

MARK	DESCRIPTION	DATE

DESIGNED BY:
DRAWN BY:
CHECKED BY:
SUBMITTED BY:
SIZE:
ISSUE DATE:
SOLICITATION NO.:
CONTRACT NO.:
E-56-14-22

U.S. ARMY CORPS OF ENGINEERS
SEATTLE DISTRICT
SEATTLE, WASHINGTON

FY25 P2-488932-HAHDFPF
HOWARD A HANSON DAM FISH PASSAGE FACILITY
GREEN RIVER, WASHINGTON

STRUCTURE EXCAVATION
SECTION 7+00

SHEET ID

35% DESIGN SUBMITTAL

FILE PATH: pw://PWINT-WPC.EIS.DS.USACE.ARMY.MIL:CENWS - Seattle District/Documents/Civil Works/Howard Hanson Dam, WA/FY25_P2-488932_HAHDFPF/Plan Sets/03_Sheets/Civil/Structure Excavation 6+25.dgn
PLOT DATE: 12:33:16 PM 10/26/2021

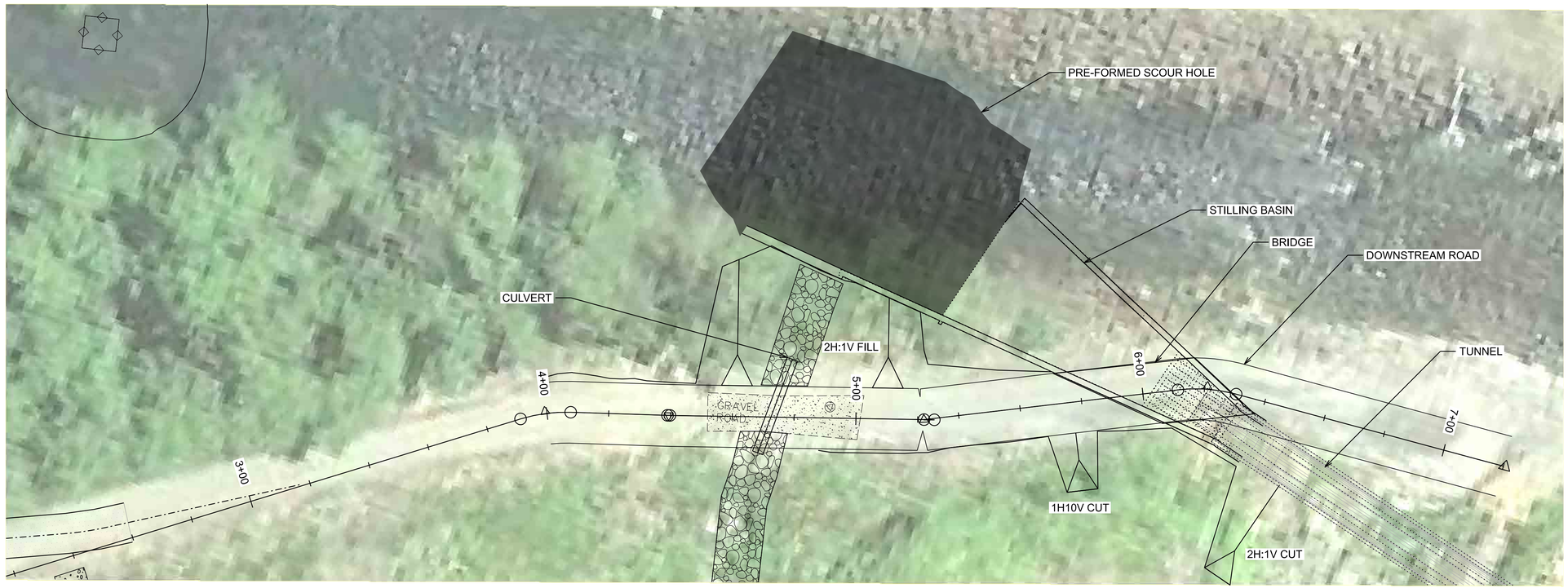

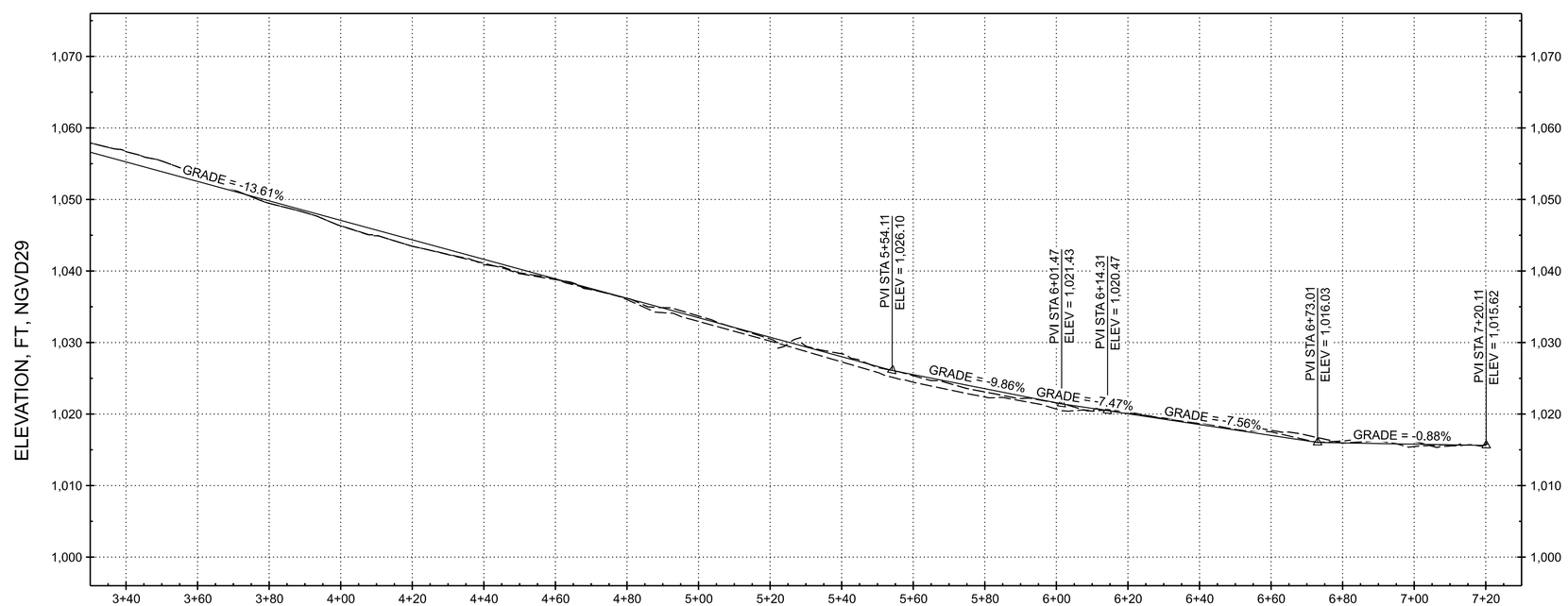

1 DOWNSTREAM ROAD - PLAN AND PROFILE

SCALE: 1"=20'

0 20' 40'

US Army Corps of Engineers®

MARK	DESCRIPTION	DATE

DESIGNED BY:
DRAWN BY:
CHECKED BY:
SUBMITTED BY: KATHERINE LaPONTE
SIZE:
ISSUE DATE: 09 NOVEMBER 2021
SOLICITATION NO.:
CONTRACT NO.:
FILE NO.: E-36-14-22

U.S. ARMY CORPS OF ENGINEERS
SEATTLE DISTRICT
SEATTLE, WASHINGTON

FY25 P2-488932-HAHDFPF
HOWARD A HANSON DAM FISH PASSAGE FACILITY
GREEN RIVER, WASHINGTON

DOWNSTREAM ROAD
PLAND AND PROFILE

SHEET ID

DRAFT FEASIBILITY DESIGN

FILE PATH: pw://PWINT-WPC.EIS.DS.USACE.ARMY.MIL:CENWS - Seattle District/Documents/Civil Works/Howard Hanson Dam, WA/FY25_P2-488932_HAHDFPF/Plan Sets/03_Sheets/Civil/Downstream Road - Plan and Profile.dgn
PLOT DATE: 8:52:19 AM 11/30/2021

2 DOWNSTREAM CHANNEL PLAN

SCALE: 1"=30'

0 30' 60'

US Army Corps of Engineers®

MARK	DESCRIPTION	DATE

ISSUE DATE: 09 NOVEMBER 2021
SOLICITATION NO.:
CONTRACT NO.:
FILE NO.: E-36-14-22

DESIGNED BY: KATO
DRAWN BY: KATO
CHECKED BY: PEELE
SUBMITTED BY: KATHERINE LaPONTE
SIZE: ANSI D

U.S. ARMY CORPS OF ENGINEERS
SEATTLE DISTRICT
SEATTLE, WASHINGTON

FY25 P2-488932-HAHDFPF
HOWARD A HANSON DAM FISH PASSAGE FACILITY
GREEN RIVER, WASHINGTON

DOWNSTREAM CHANNEL PLAN

SHEET ID
C-122

DRAFT FEASIBILITY DESIGN

FILE PATH: pw://PWINT-WPC.EIS.DS.USACE.ARMY.MIL:CENWS - Seattle District/Documents/Civil Works/Howard Hanson Dam, WA/FY25_P2-488932_HAHDFPF/Plan Sets/03_Sheets/Civil/C-122 DOWNSTREAM CHANNEL PLAN
PLOT DATE: 9:14:03 AM 3/11/2022

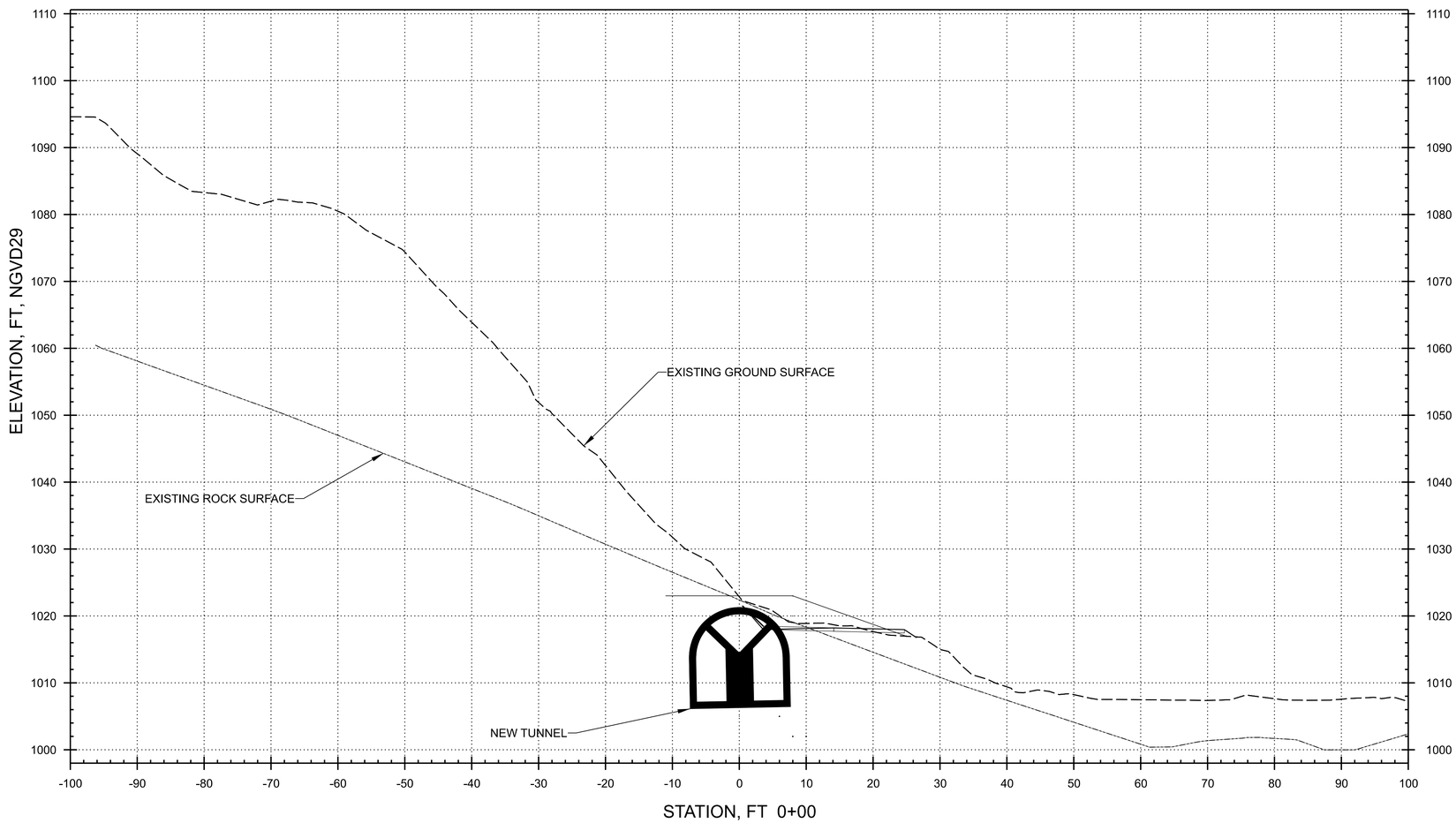

1 DOWNSTREAM CHANNEL 0+00.00

SCALE: 1"=10'

0 10' 20'

0 10' 20'

US Army Corps of Engineers®

MARK	DESCRIPTION	DATE

DESIGNED BY: KATO	ISSUE DATE:
DRAWN BY: KATO	SOLICITATION NO.:
CHECKED BY: PEELE	CONTRACT NO.:
SUBMITTED BY: WEST	E-56-14-22
SIZE: ANSI D	

U.S. ARMY CORPS OF ENGINEERS
U.S. ARMY CORPS OF ENGINEERS
SEATTLE DISTRICT
SEATTLE, WASHINGTON

FY25 P2-488932-HAHDFPF
HOWARD A HANSON DAM FISH PASSAGE FACILITY
GREEN RIVER, WASHINGTON

DOWNSTREAM CHANNEL
SECTION 1+00

SHEET ID

C-320

35% DESIGN SUBMITTAL

FILE PATH: pw://PWINT-WPC.EIS.DS.USACE.ARMY.MIL:CENWS - Seattle District/Documents/Civil Works/Howard Hanson Dam, WA/FY25_P2-488932_HAHDFPF/Plan Sets/03_Sheets/Civil/Downstream Channel 0+00.dgn

PLOT DATE: 3:07:27 PM 10/28/2021

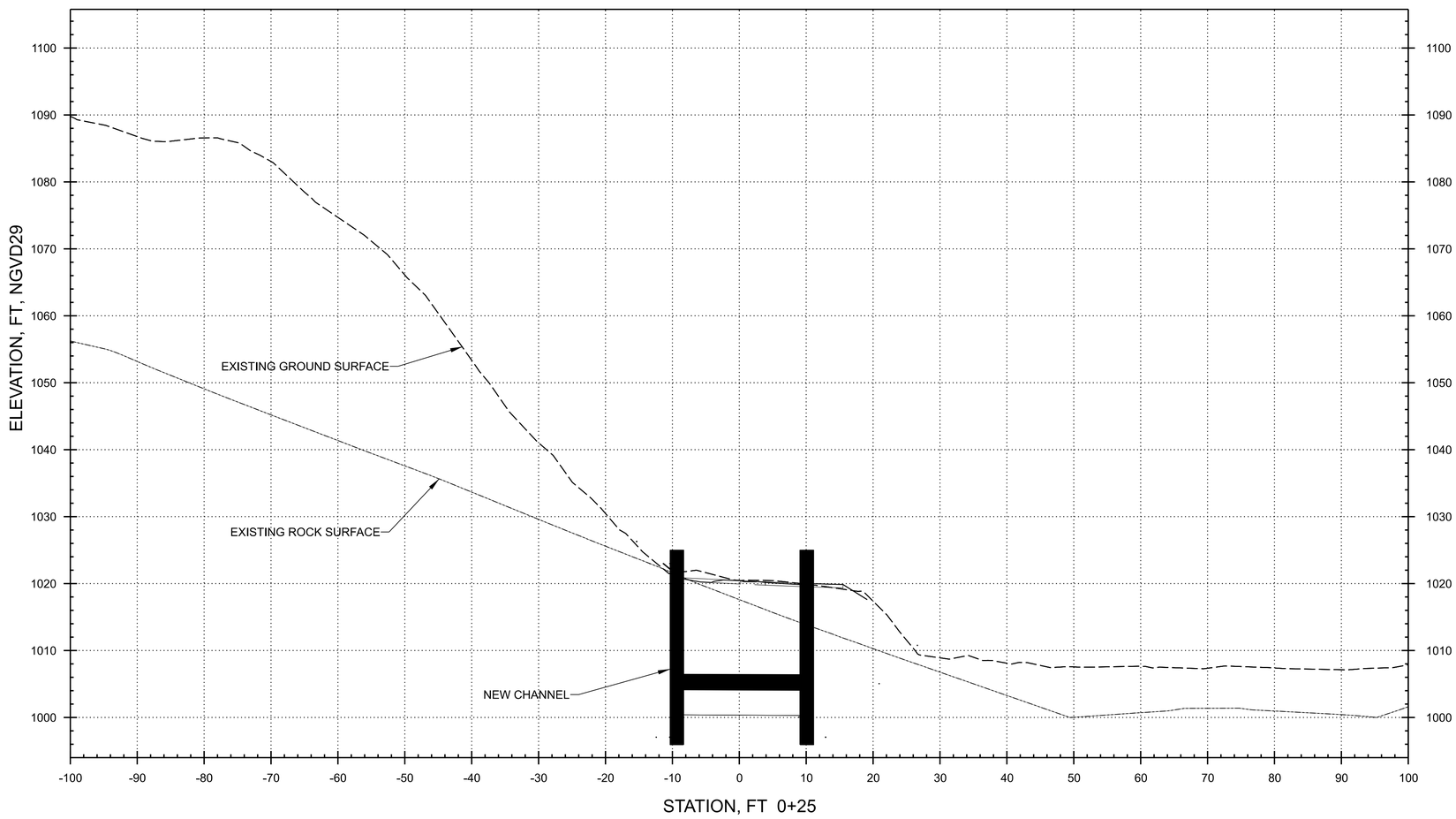

0 10' 20'

0 10' 20'

US Army Corps of Engineers®

MARK	DESCRIPTION	DATE

DESIGNED BY: KATO
DRAWN BY: KATO
CHECKED BY: PEELE
SUBMITTED BY: WEST
SIZE: ANSI D
ISSUE DATE:
SOLICITATION NO.:
CONTRACT NO.: E-56-14-22

U.S. ARMY CORPS OF ENGINEERS
U.S. ARMY CORPS OF ENGINEERS
SEATTLE DISTRICT
SEATTLE, WASHINGTON

FY25 P2-488932-HAHDFPF
HOWARD A HANSON DAM FISH PASSAGE FACILITY
GREEN RIVER, WASHINGTON

DOWNSTREAM CHANNEL
SECTION 2+00

SHEET ID
C-322

35% DESIGN SUBMITTAL

FILE PATH: pw://PWINT-WPC.EIS.DS.USACE.ARMY.MIL:CENWS - Seattle District/Documents/Civil Works/Howard Hanson Dam, WA/FY25_P2-488932_HAHDFPF/Plan Sets/03_Sheets/Civil/Downstream Channel 0+25.dgn
PLOT DATE: 3:34:14 PM 10/28/2021

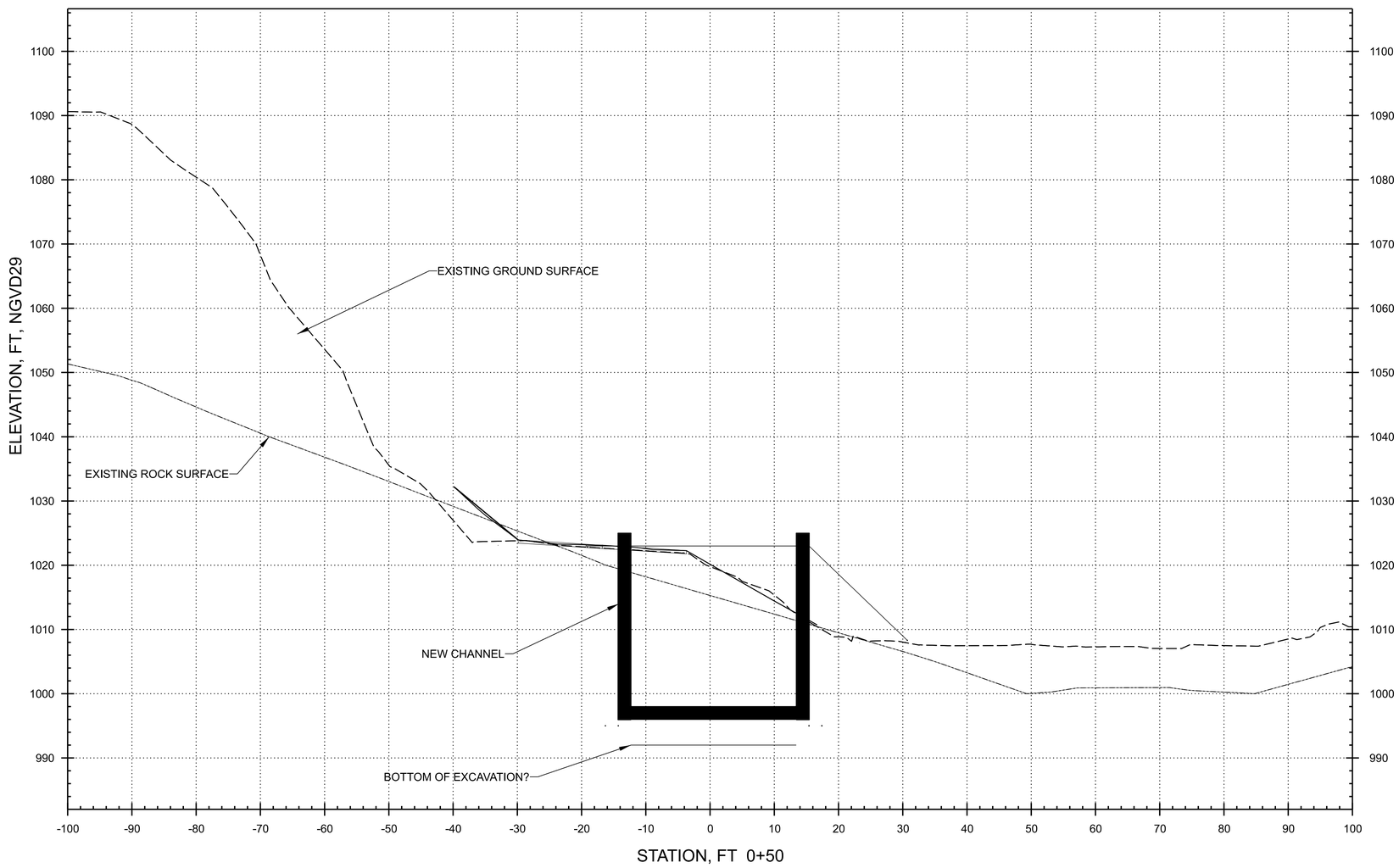

US Army Corps of Engineers®

MARK	DESCRIPTION	DATE

U.S. ARMY CORPS OF ENGINEERS
U.S. ARMY CORPS OF ENGINEERS
SEATTLE DISTRICT
SEATTLE, WASHINGTON

DESIGNED BY: KATO
DRAWN BY: KATO
CHECKED BY: PEELE
SUBMITTED BY: KATHERINE LaPOINTE
SIZE: ANSI D
ISSUE DATE: 09 NOVEMBER 2021
SOLICITATION NO.:
CONTRACT NO.:
FILE NO.: E-36-14-22
SCALE:

FY25 P2-488932-HAHDFPF
HOWARD A HANSON DAM FISH PASSAGE FACILITY
GREEN RIVER, WASHINGTON

DOWNSTREAM CHANNEL
SECTION 3+00

SHEET ID

DRAFT FEASIBILITY DESIGN

FILE PATH: pw://PWINT-WPC.EIS.DS.USACE.ARMY.MIL:CENWS - Seattle District/Documents/Civil Works/Howard Hanson Dam, WA/FY25_P2-488932_HAHDFPF/Plan Sets/03_Sheets/Civil/Downstream Channel 0+50.dgn
PLOT DATE: 1:40:17 PM 11/9/2021

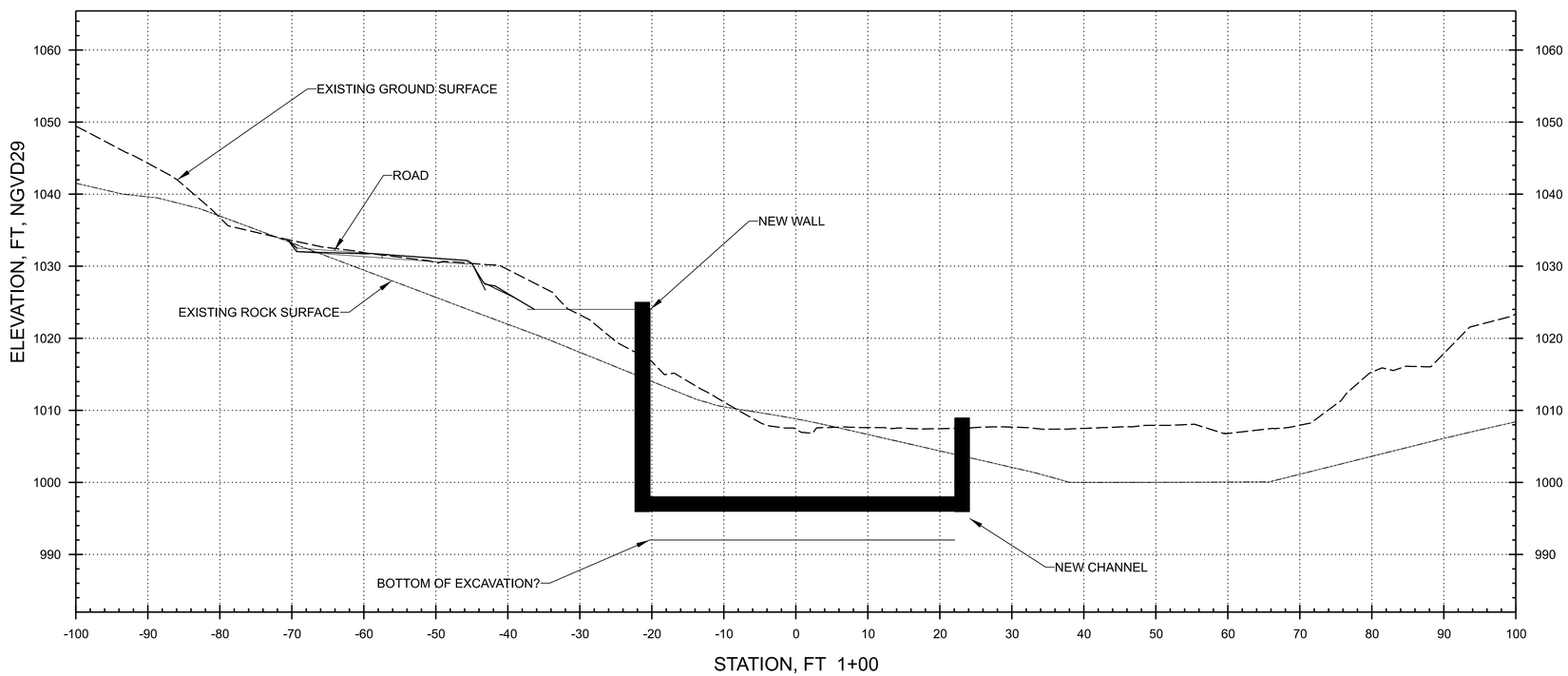

0 10' 20'

0 10' 20'

US Army Corps of Engineers®

MARK	DESCRIPTION	DATE

DESIGNED BY: KATO
DRAWN BY: KATO
CHECKED BY: PEELE
SUBMITTED BY: WEST
SIZE: ANSI D
ISSUE DATE:
SOLICITATION NO.:
CONTRACT NO.: E-56-14-22

U.S. ARMY CORPS OF ENGINEERS
U.S. ARMY CORPS OF ENGINEERS
SEATTLE DISTRICT
SEATTLE, WASHINGTON

FY25 P2-488932-HAHDFPF
HOWARD A HANSON DAM FISH PASSAGE FACILITY
GREEN RIVER, WASHINGTON

DOWNSTREAM CHANNEL
SECTION 1+00

SHEET ID
C-321

35% DESIGN SUBMITTAL

FILE PATH: pw://PWINT-WPC.EIS.DS.USACE.ARMY.MIL:CENWS - Seattle District/Documents/Civil Works/Howard Hanson Dam, WA/FY25_P2-488932_HAHDFPF/Plan Sets/03_Sheets/Civil/Downstream Channel 1+00.dgn
PLOT DATE: 3:18:45 PM 10/28/2021

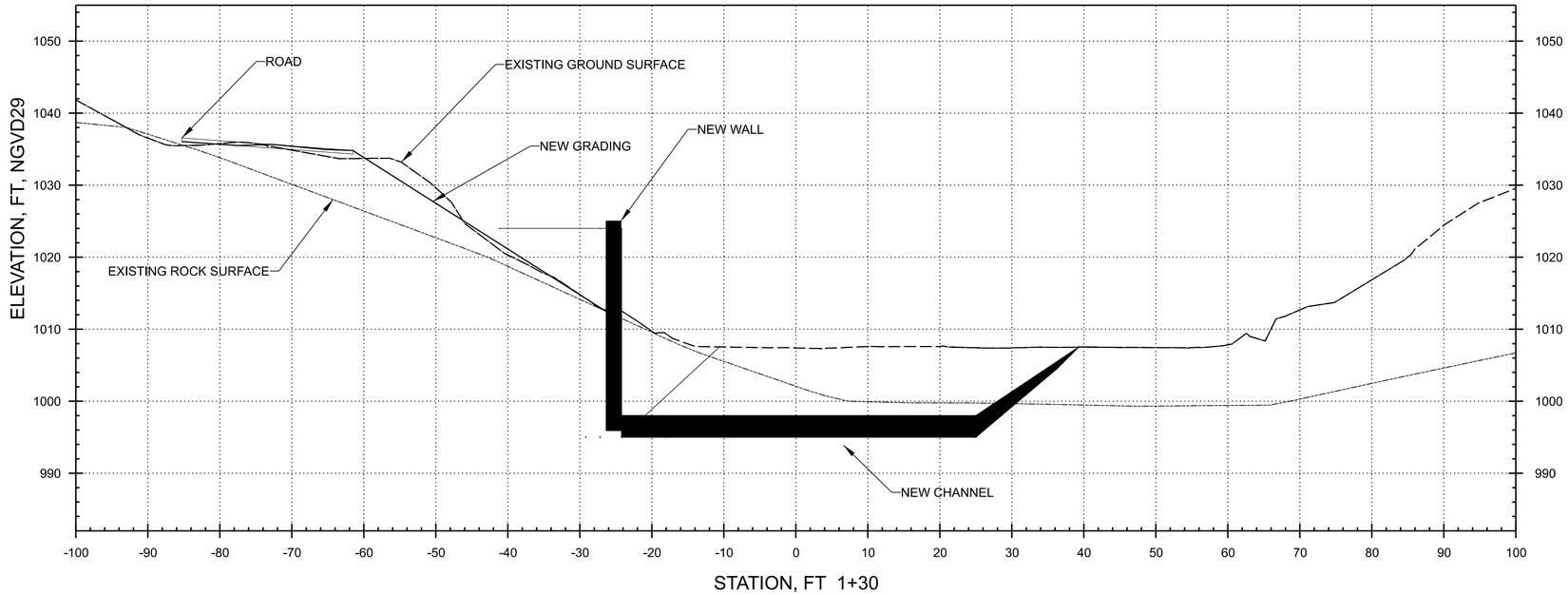

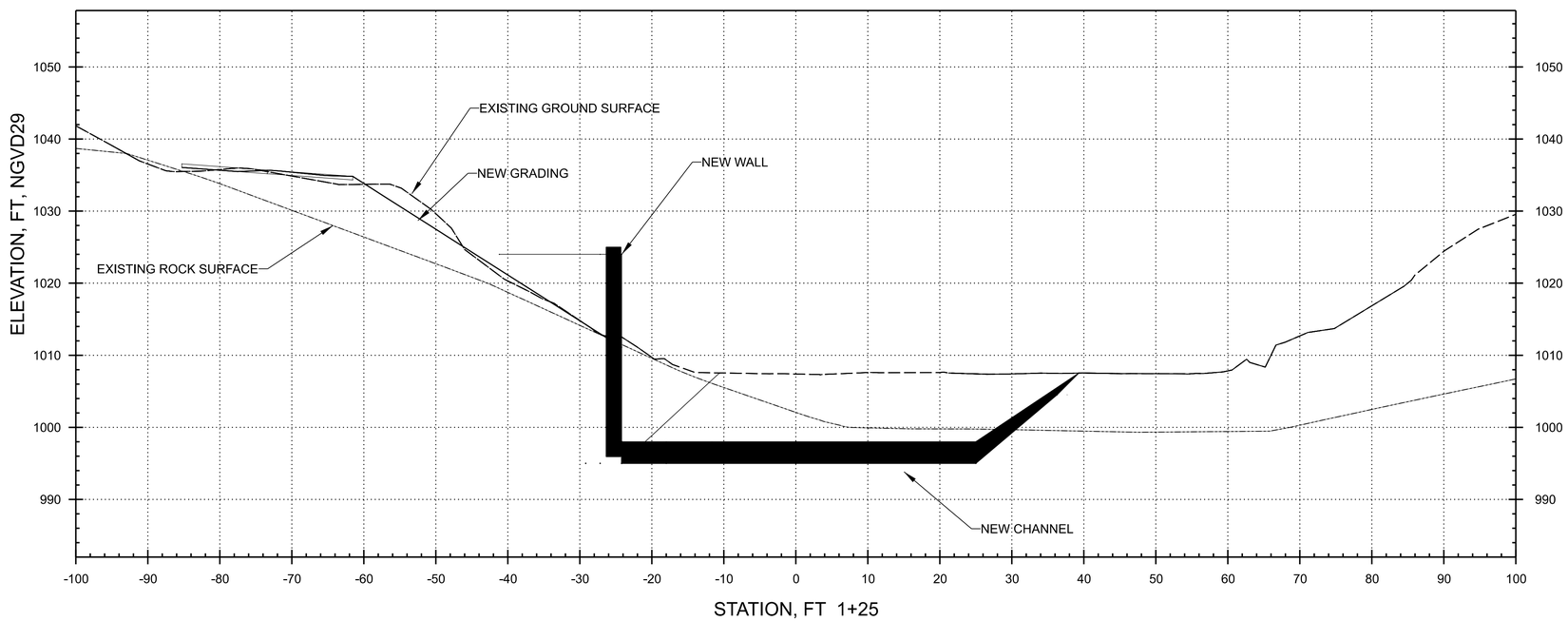

0 10' 20'

0 10' 20'

US Army Corps of Engineers®

MARK	DESCRIPTION	DATE

DESIGNED BY: KATO	ISSUE DATE:
DRAWN BY: KATO	SOLICITATION NO.:
CHECKED BY: PEELE	CONTRACT NO.:
SUBMITTED BY: WEST	E-56-14-22
SIZE: ANSI D	

U.S. ARMY CORPS OF ENGINEERS
U.S. ARMY CORPS OF ENGINEERS
SEATTLE DISTRICT
SEATTLE, WASHINGTON

FY25 P2-488932-HAHDFPF
HOWARD A HANSON DAM FISH PASSAGE FACILITY
GREEN RIVER, WASHINGTON

DOWNSTREAM CHANNEL
SECTION 5+00

SHEET ID

C-325

35% DESIGN SUBMITTAL

FILE PATH: pw://PWINT-WPC.EIS.DS.USACE.ARMY.MIL:CENWS - Seattle District/Documents/Civil Works/Howard Hanson Dam, WA/FY25_P2-488932_HAHDFPF/Plan Sets/03_Sheets/Civil/Downstream Channel 1+25.dgn
PLOT DATE: 3:21:10 PM 10/28/2021

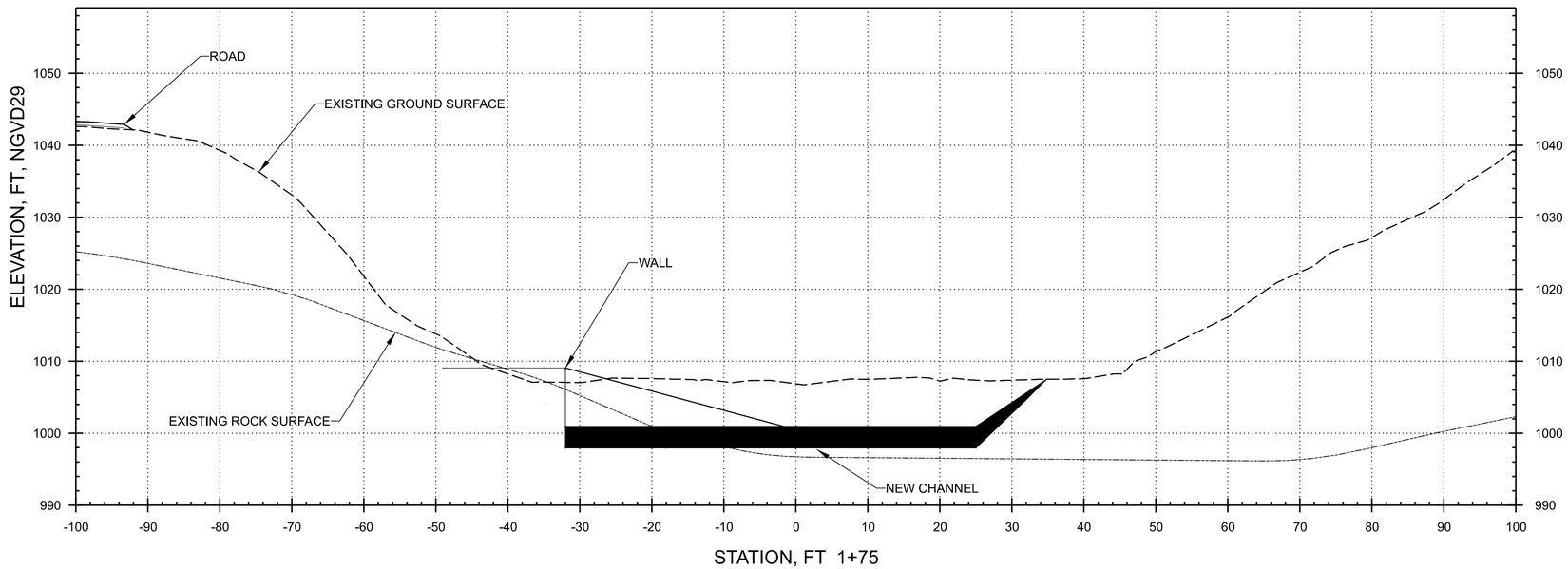

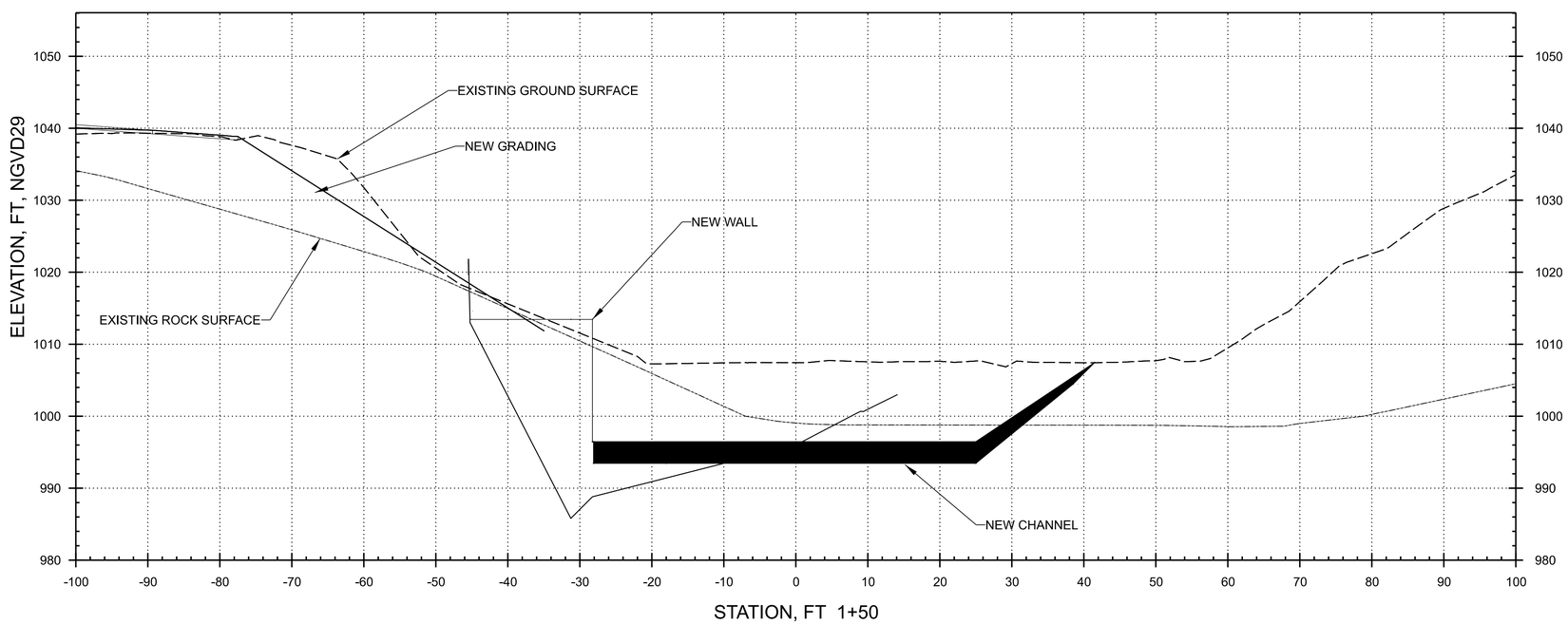

US Army Corps of Engineers®

MARK	DESCRIPTION	DATE

U.S. ARMY CORPS OF ENGINEERS
U.S. ARMY CORPS OF ENGINEERS
SEATTLE DISTRICT
SEATTLE, WASHINGTON

DESIGNED BY: KATO	ISSUE DATE:
DRAWN BY: KATO	SOLICITATION NO.:
CHECKED BY: PEELE	CONTRACT NO.:
SUBMITTED BY: WEST	E-56-14-22
SIZE: ANSI D	

FY25 P2-488932-HAHDFPF
HOWARD A HANSON DAM FISH PASSAGE FACILITY
GREEN RIVER, WASHINGTON

DOWNSTEAM CHANNEL
SECTION 6+00

SHEET ID
C-326

35% DESIGN SUBMITTAL

FILE PATH: pw://PWINT-WPC.EIS.DS.USACE.ARMY.MIL:CENWS - Seattle District/Documents/Civil Works/Howard Hanson Dam, WA/FY25_P2-488932_HAHDFPF/Plan Sets/03_Sheets/Civil/Downstream Channel 1+50.dgn
PLOT DATE: 3:25:16 PM 10/28/2021

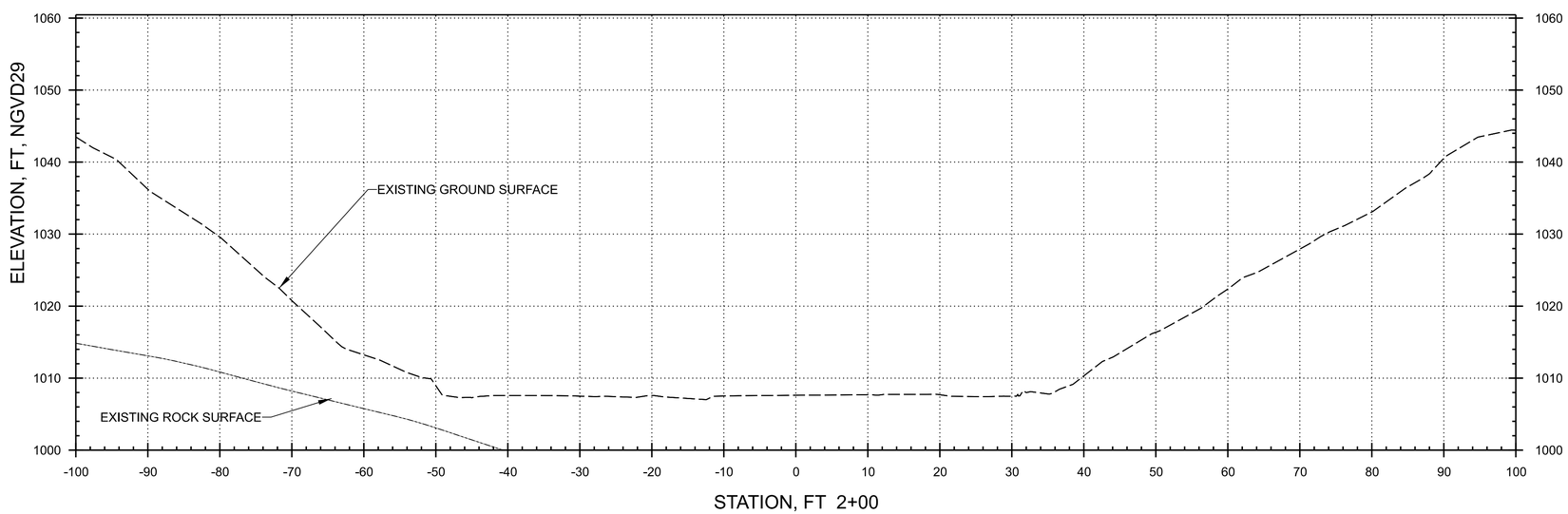

0 10' 20'

0 10' 20'

US Army Corps of Engineers®

MARK	DESCRIPTION	DATE

DESIGNED BY:
DRAWN BY:
CHECKED BY:
SUBMITTED BY:
SIZE:
ISSUE DATE:
SOLICITATION NO.:
CONTRACT NO.:
E-56-14-22

U.S. ARMY CORPS OF ENGINEERS
SEATTLE DISTRICT
SEATTLE, WASHINGTON

FY25 P2-488932-HAHDFPF
HOWARD A HANSON DAM FISH PASSAGE FACILITY
GREEN RIVER, WASHINGTON

SHEET ID

35% DESIGN SUBMITTAL

FILE PATH: pw://PWINT-WPC.EIS.DS.USACE.ARMY.MIL:CENWS - Seattle District/Documents/Civil Works/Howard Hanson Dam, WA/FY25_P2-488932_HAHDFPF/Plan Sets/03_Sheets/Civil/Downstream Channel 2+20.dgn
PLOT DATE: 3:31:30 PM 10/28/2021

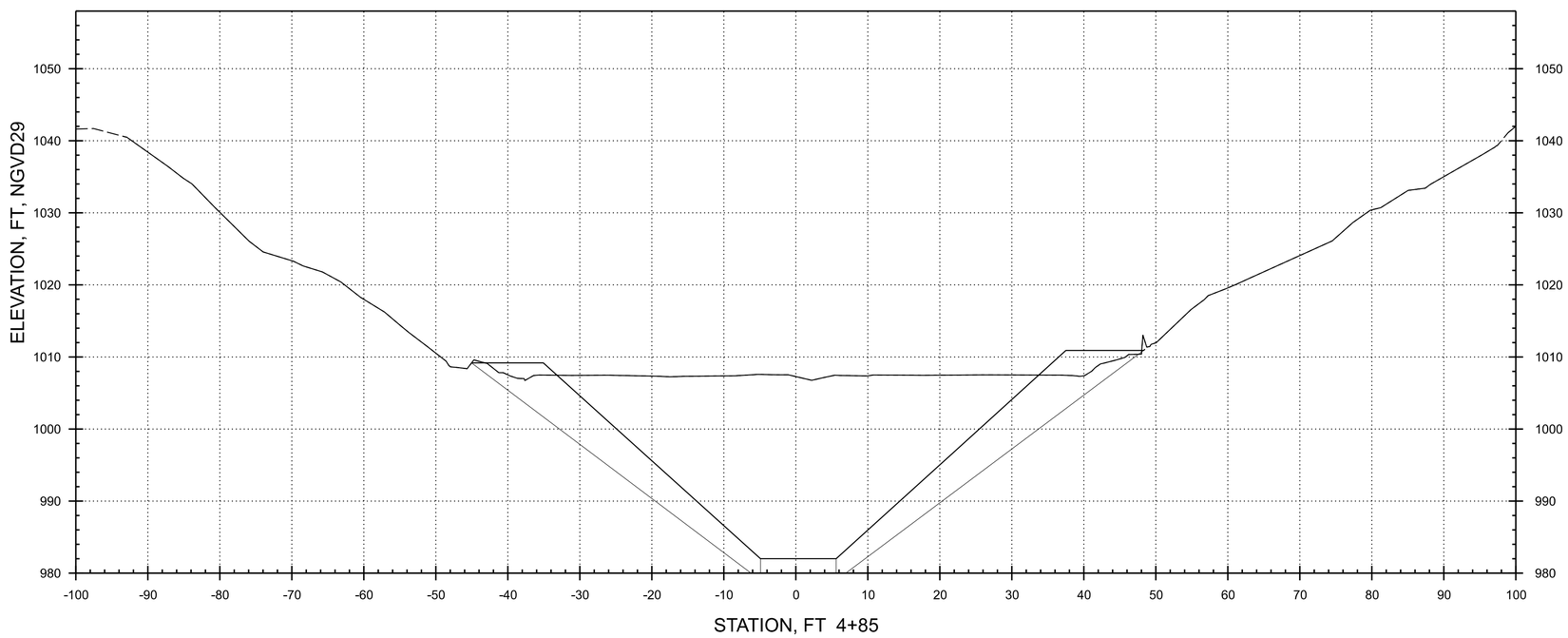

0 10' 20'

0 10' 20'

US Army Corps of Engineers®

MARK	DESCRIPTION	DATE

DESIGNED BY: KATO
DRAWN BY: KATO
CHECKED BY: PEELE
SUBMITTED BY: WEST
SIZE: ANSI D
ISSUE DATE: E-56-14-22
SOLICITATION NO.:
CONTRACT NO.:

U.S. ARMY CORPS OF ENGINEERS
U.S. ARMY CORPS OF ENGINEERS
SEATTLE DISTRICT
SEATTLE, WASHINGTON

FY25 P2-488932-HAHDFPF
HOWARD A HANSON DAM FISH PASSAGE FACILITY
GREEN RIVER, WASHINGTON

DOWNSTEAM PLUNGE POOL
SECTION 4+10

SHEET ID
C-3--

35% DESIGN SUBMITTAL

FILE PATH: pw://PWINT-WPC.EIS.DS.USACE.ARMY.MIL:CENWS - Seattle District/Documents/Civil Works/Howard Hanson Dam, WA/FY25_P2-488932_HAHDFPF/Plan Sets/03_Sheets/Civil/Downstream Channel Plunge Pool 4+10.dgn
PLOT DATE: 3:24:41 PM 10/27/2021

H1 TUNNEL ALIGNMENT PLAN

SCALE: 1"=80'

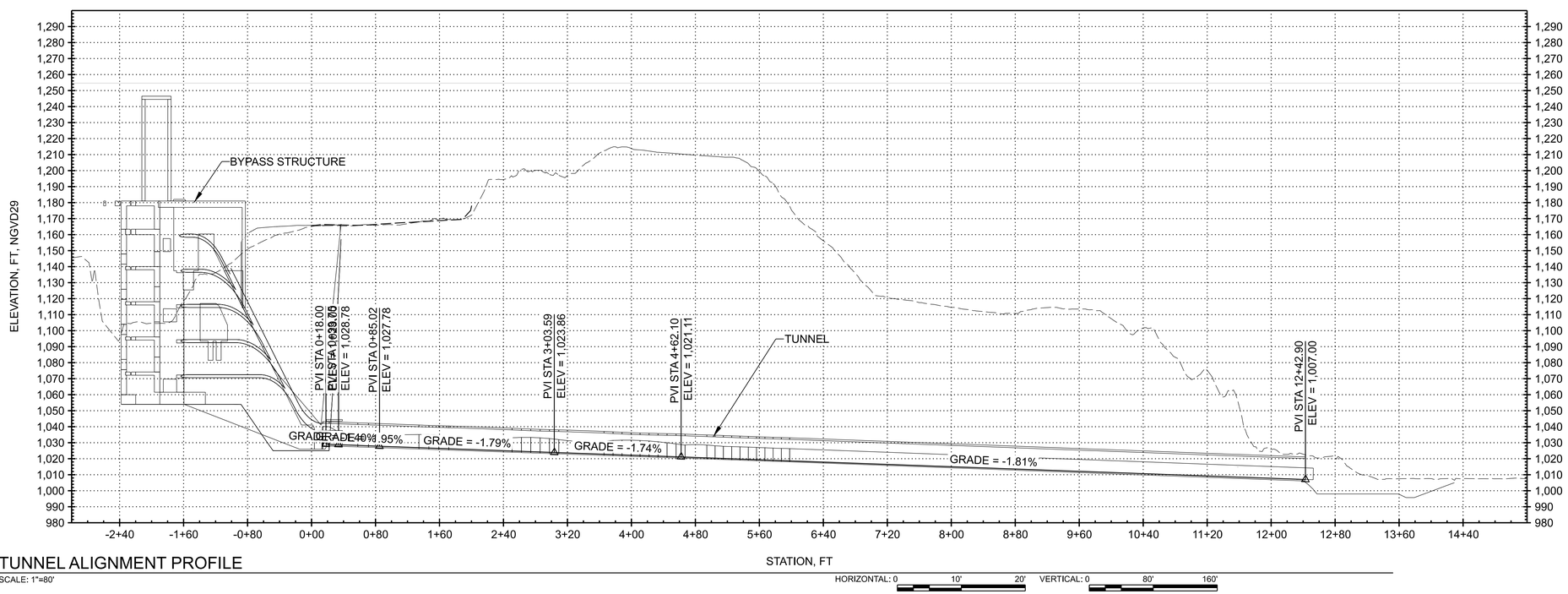

A1 TUNNEL ALIGNMENT PROFILE

SCALE: 1"=80'

US Army Corps of Engineers®

MARK	DESCRIPTION	DATE

DESIGNED BY:
DRAWN BY:
CHECKED BY:
SUBMITTED BY: KATHERINE LaPONTE
SIZE:
ISSUE DATE: 09 NOVEMBER 2021
SOLICITATION NO.:
CONTRACT NO.:
FILE NO.: E-36-14-22

U.S. ARMY CORPS OF ENGINEERS
SEATTLE DISTRICT
SEATTLE, WASHINGTON

FY25 P2-488932-HAHDFPF
HOWARD A HANSON DAM FISH PASSAGE FACILITY
GREEN RIVER, WASHINGTON

TUNNEL PLAN AND PROFILE

SHEET ID
G-124

DRAFT FEASIBILITY DESIGN

pw://PWINT-WPC.EIS.DS.USACE.ARMY.MIL:CENWS - Seattle District/Documents/Civil Works/Howard Hanson Dam, WA/FY25_P2-488932_HAHDFPF/Plan Sets/01_Models/Civil/ORD Files/HAHDFPF-C-DM-SITE_NAD27_Tunnel_Alignment.dgn
9:28:25 AM 3/11/2022
PD: AEC_pdf.pltcfg; NWS_AEC_Screen_FullSize.dscript

FILE PATH: pw://PWINT-WPC.EIS.DS.USACE.ARMY.MIL:CENWS - Seattle District/Documents/Civil Works/Howard Hanson Dam, WA/FY25_P2-488932_HAHDFPF/Plan Sets/01_Models/Civil/ORD Files/HAHDFPF-C-DM-SITE_NAD27_Tunnel_Alignment.dgn
PLOT DATE: 9:28:25 AM 3/11/2022

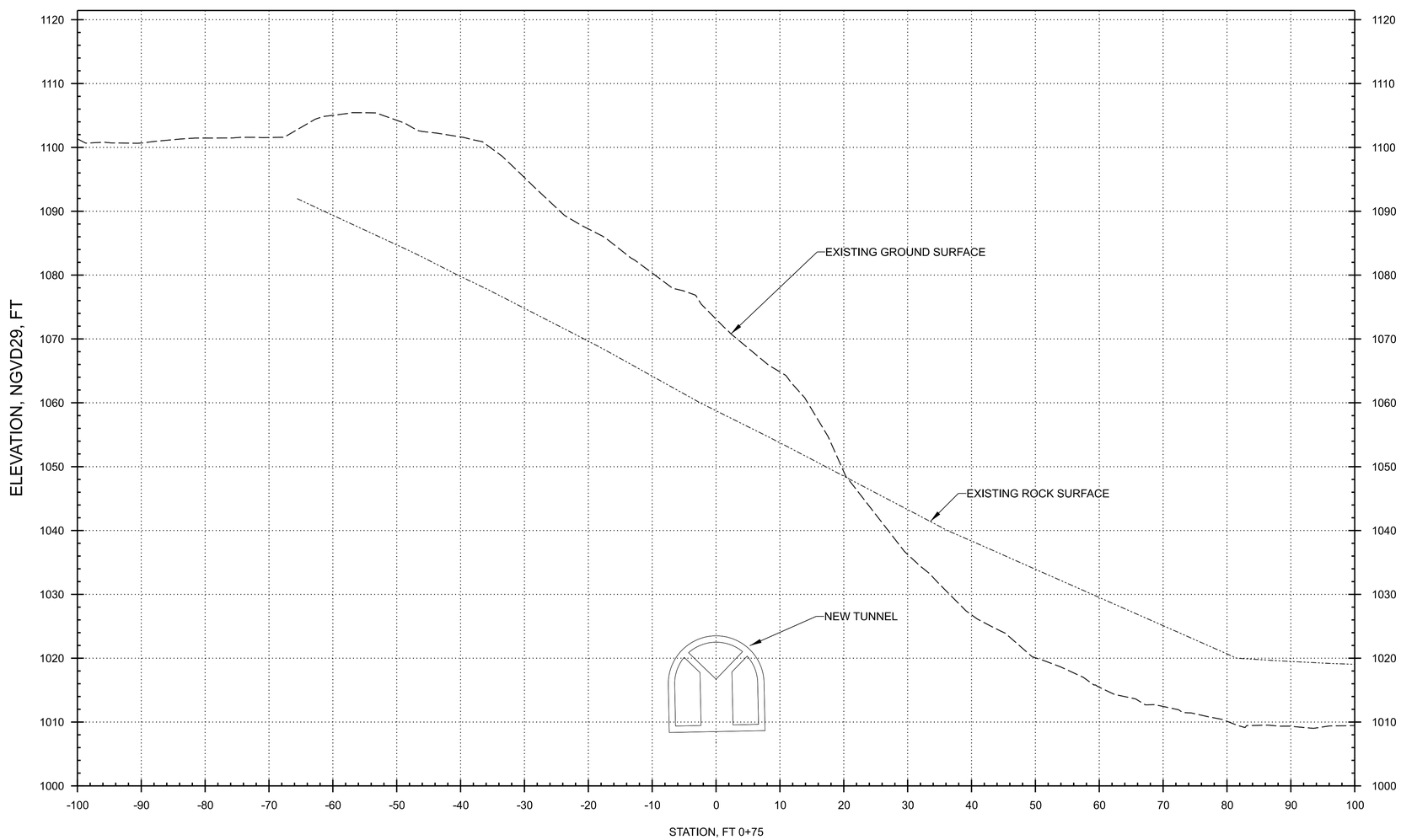

1 TUNNEL EXIT 0+75

SCALE: 1"=10'

0 10' 20'

0 10' 20'

US Army Corps of Engineers®

MARK	DESCRIPTION	DATE

DESIGNED BY:
DRAWN BY:
CHECKED BY:
SUBMITTED BY:
SIZE:
ISSUE DATE:
SOLICITATION NO.:
CONTRACT NO.:
E-56-14-22

U.S. ARMY CORPS OF ENGINEERS
SEATTLE DISTRICT
SEATTLE, WASHINGTON

FY25 P2-488932-HAHDFPF
HOWARD A HANSON DAM FISH PASSAGE FACILITY
GREEN RIVER, WASHINGTON

TUNNEL EXIT
CROSS SECTION 0+75

SHEET ID

G-

35% DESIGN SUBMITTAL

FILE PATH: pw://PWINT-WPC.EIS.DS.USACE.ARMY.MIL:CENWS - Seattle District/Documents/Civil Works/Howard Hanson Dam, WA/FY25_P2-488932_HAHDFPF/Plan Sets/03_Sheets/Civil/Tunnel Exit 0+75.dgn
PLOT DATE: 3:58:48 PM 11/2/2021

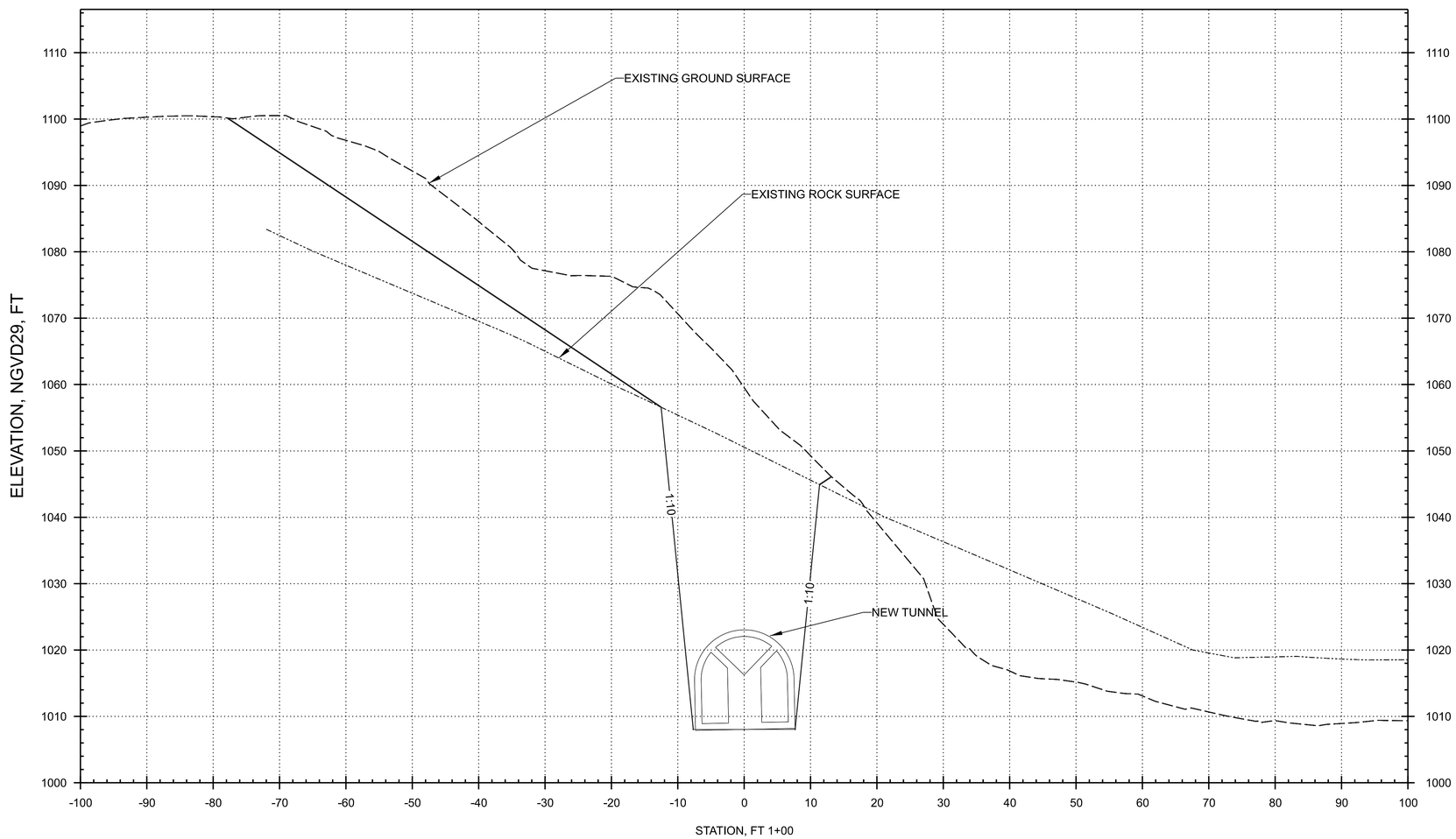

1 TUNNEL EXIT 1+00

SCALE: 1"=10'

0 10' 20'

0 10' 20'

US Army Corps of Engineers®

MARK	DESCRIPTION	DATE

DESIGNED BY:
DRAWN BY:
CHECKED BY:
SUBMITTED BY: KATHERINE LaPONTE
SIZE:
ISSUE DATE: 09 NOVEMBER 2021
SOLICITATION NO.:
CONTRACT NO.:
FILE NO.: E-36-14-22

U.S. ARMY CORPS OF ENGINEERS
SEATTLE DISTRICT
SEATTLE, WASHINGTON

FY25 P2-488932-HAHDFPF
HOWARD A HANSON DAM FISH PASSAGE FACILITY
GREEN RIVER, WASHINGTON

TUNNEL EXIT
CROSS SECTION 1+00

SHEET ID

DRAFT FEASIBILITY DESIGN

FILE PATH: pw://PWINT-WPC.EIS.DS.USACE.ARMY.MIL:CENWS - Seattle District/Documents/Civil Works/Howard Hanson Dam, WA/FY25_P2-488932_HAHDFPF/Plan Sets/03_Sheets/Civil/Tunnel Exit 1+00.dgn
PLOT DATE: 8:11:47 AM 11/8/2021

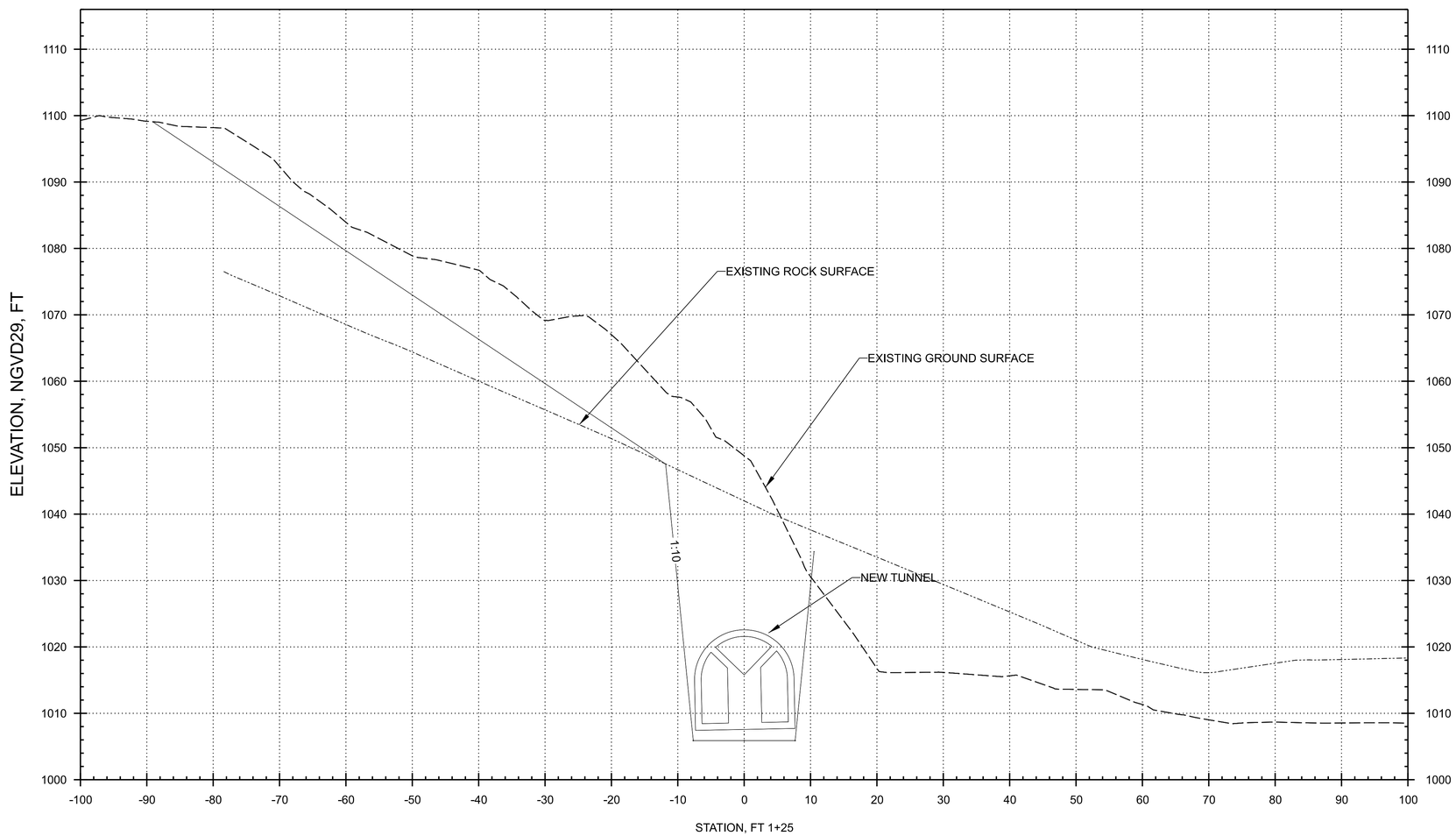

1 TUNNEL EXIT 1+25

SCALE: 1"=10'

0 10' 20'

0 10' 20'

US Army Corps of Engineers®

MARK	DESCRIPTION	DATE

DESIGNED BY:
DRAWN BY:
CHECKED BY:
SUBMITTED BY:
SIZE:

ISSUE DATE:
SOLICITATION NO.:
CONTRACT NO.:
E-56-14-22

U.S. ARMY CORPS OF ENGINEERS
SEATTLE DISTRICT
SEATTLE, WASHINGTON

FY25 P2-488932-HAHDFPF
HOWARD A HANSON DAM FISH PASSAGE FACILITY
GREEN RIVER, WASHINGTON

TUNNEL EXIT
CROSS SECTION 1+25

SHEET ID

G-

35% DESIGN SUBMITTAL

FILE PATH: pw://PWINT-WPC.EIS.DS.USACE.ARMY.MIL:CENWS - Seattle District/Documents/Civil Works/Howard Hanson Dam, WA/FY25_P2-488932_HAHDFPF/Plan Sets/03_Sheets/Civil/Tunnel Exit 1+25.dgn
PLOT DATE: 4:01:01 PM 10/29/2021

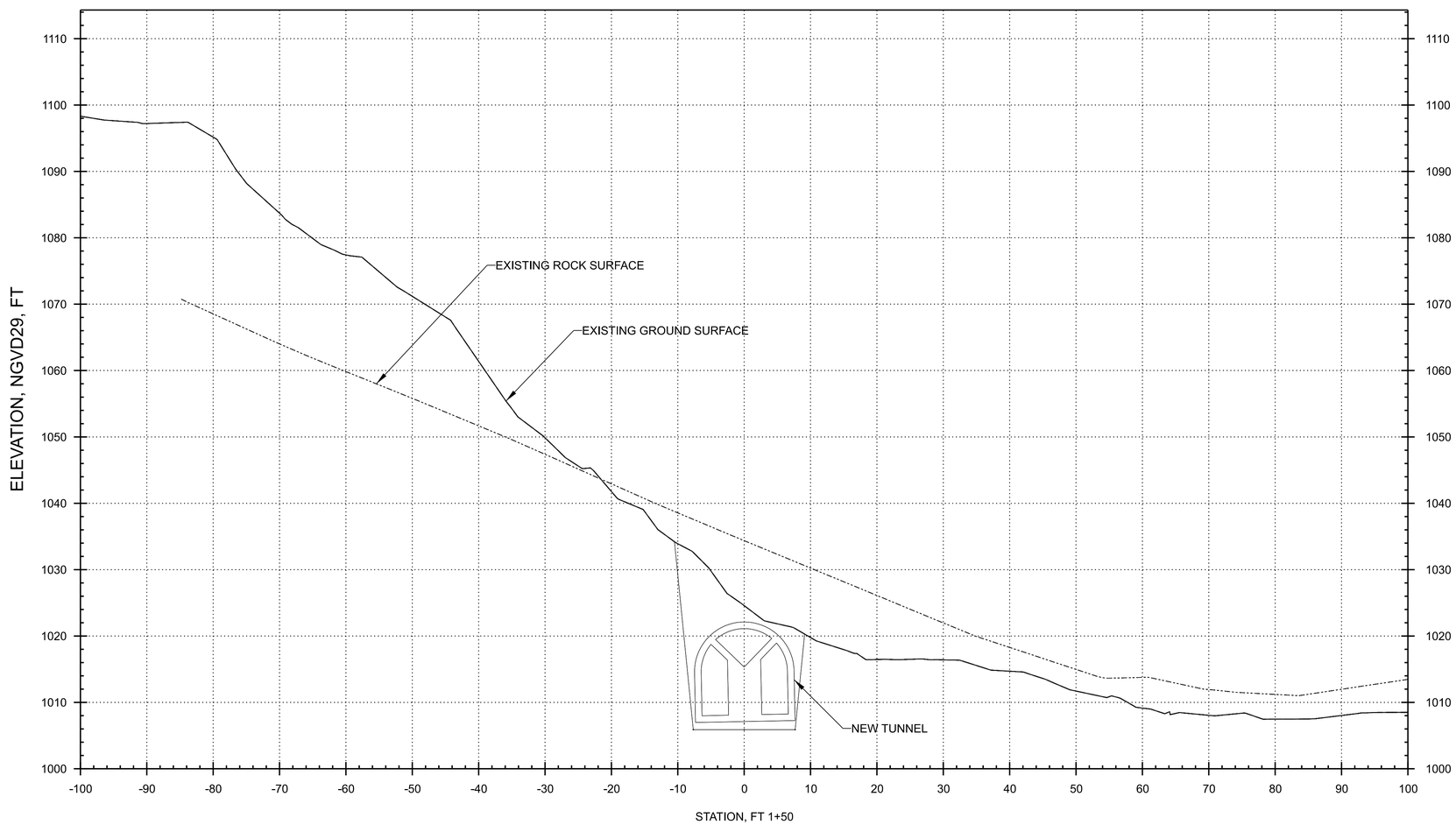

1 TUNNEL EXIT 1+50

SCALE: 1"=10'

0 10' 20'

0 10' 20'

US Army Corps of Engineers®

MARK	DESCRIPTION	DATE

DESIGNED BY:
DRAWN BY:
CHECKED BY:
SUBMITTED BY:
SIZE:
ISSUE DATE:
SOLICITATION NO.:
CONTRACT NO.:
E-56-14-22

U.S. ARMY CORPS OF ENGINEERS
SEATTLE DISTRICT
SEATTLE, WASHINGTON

FY25 P2-488932-HAHDFPF
HOWARD A HANSON DAM FISH PASSAGE FACILITY
GREEN RIVER, WASHINGTON

TUNNEL EXIT
CROSS SECTION 1+50

SHEET ID

G-

35% DESIGN SUBMITTAL

FILE PATH: pw://PWINT-WPC.EIS.DS.USACE.ARMY.MIL:CENWS - Seattle District/Documents/Civil Works/Howard Hanson Dam, WA/FY25_P2-488932_HAHDFPF/Plan Sets/03_Sheets/Civil/Tunnel Exit 1+50.dgn

PLOT DATE: 4:16:06 PM 10/29/2021

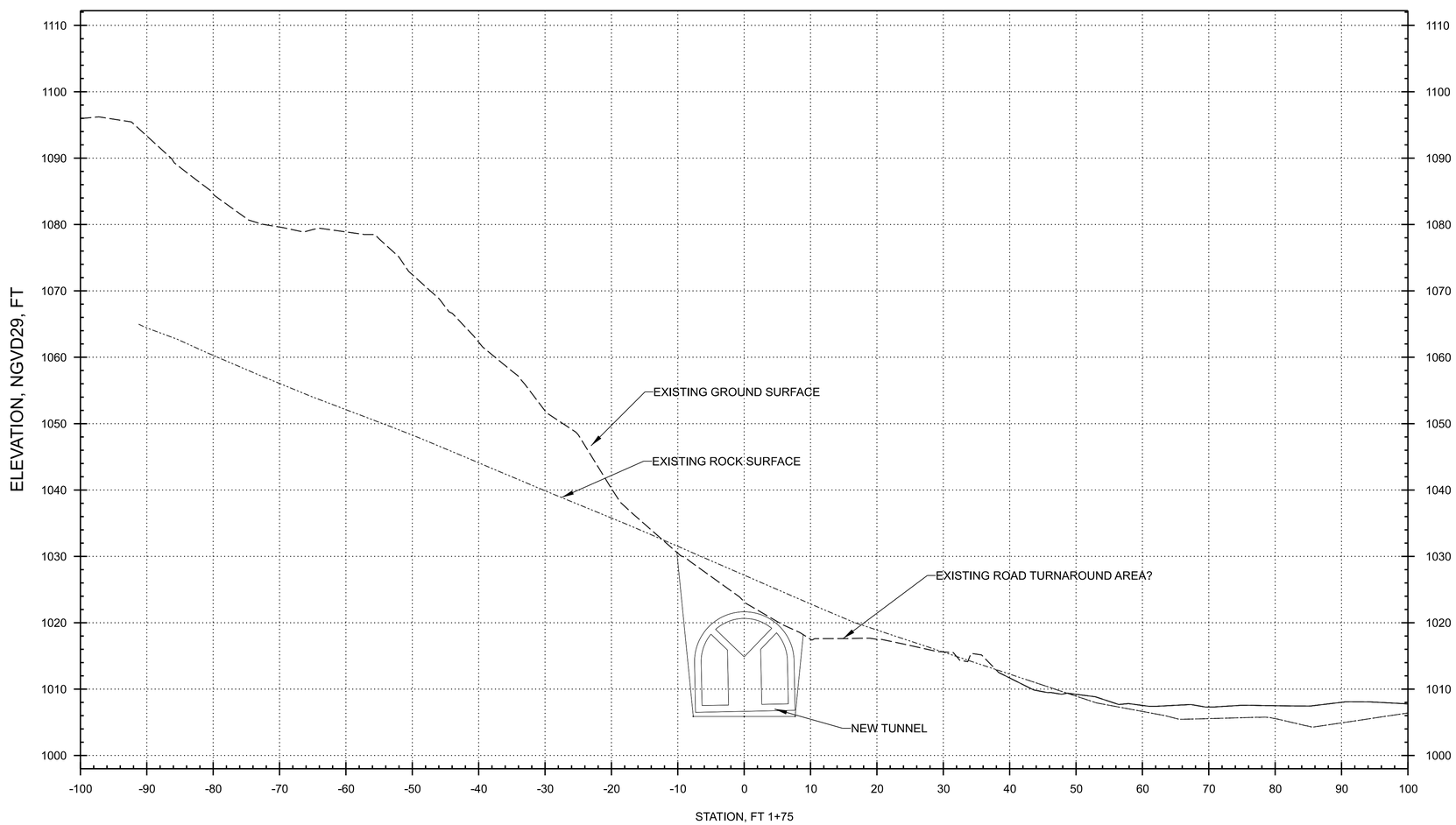

1 TUNNEL EXIT 1+75

SCALE: 1"=10'

US Army Corps of Engineers®

MARK	DESCRIPTION	DATE

DESIGNED BY:
DRAWN BY:
CHECKED BY:
SUBMITTED BY:
SIZE:
ISSUE DATE:
SOLICITATION NO.:
CONTRACT NO.:
E-56-14-22

U.S. ARMY CORPS OF ENGINEERS
SEATTLE DISTRICT
SEATTLE, WASHINGTON

FY25 P2-488932-HAHDFPF
HOWARD A HANSON DAM FISH PASSAGE FACILITY
GREEN RIVER, WASHINGTON

TUNNEL EXIT
CROSSS SECTION 1+75

SHEET ID
G-

35% DESIGN SUBMITTAL

FILE PATH: pw://PWINT-WPC.EIS.DS.USACE.ARMY.MIL:CENWS - Seattle District/Documents/Civil Works/Howard Hanson Dam, WA/FY25_P2-488932_HAHDFPF/Plan Sets/03_Sheets/Civil/Tunnel Exit 1+75.dgn
PLOT DATE: 4:20:30 PM 10/29/2021

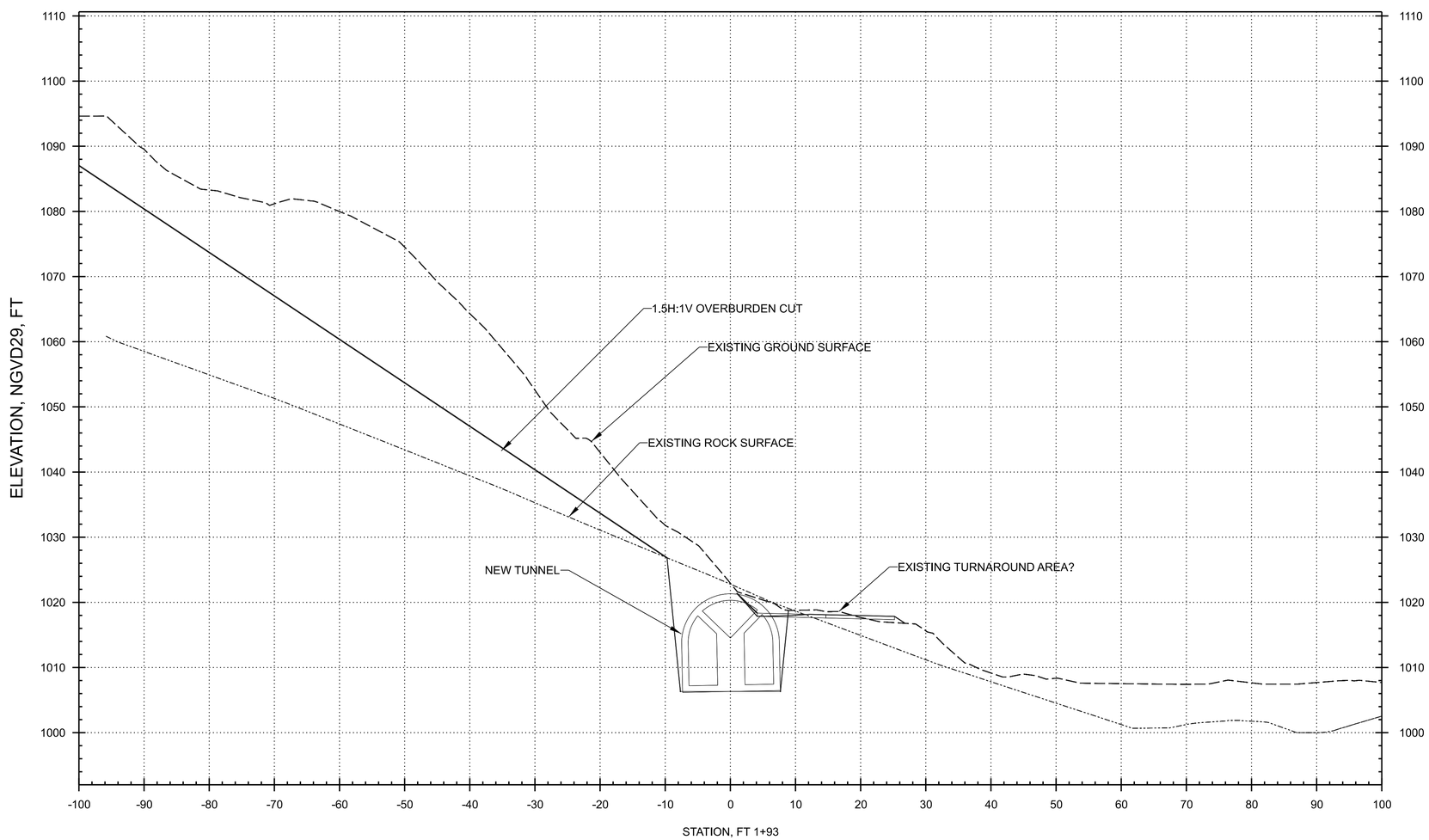

1 TUNNEL EXIT 1+93

SCALE: 1"=10'

0 10' 20'

0 10' 20'

US Army Corps of Engineers®

MARK	DESCRIPTION	DATE

DESIGNED BY:
DRAWN BY:
CHECKED BY:
SUBMITTED BY: KATHERINE LaPONTE
SIZE:
ISSUE DATE: 09 NOVEMBER 2021
SOLICITATION NO.:
CONTRACT NO.:
FILE NO.: E-36-14-22

U.S. ARMY CORPS OF ENGINEERS
SEATTLE DISTRICT
SEATTLE, WASHINGTON

FY25 P2-488932-HAHDFPF
HOWARD A HANSON DAM FISH PASSAGE FACILITY
GREEN RIVER, WASHINGTON

TUNNEL EXIT
CROSS SECTION 1+93

SHEET ID

DRAFT FEASIBILITY DESIGN

FILE PATH: pw://PWINT-WPC.EIS.DS.USACE.ARMY.MIL:CENWS - Seattle District/Documents/Civil Works/Howard Hanson Dam, WA/FY25_P2-488932_HAHDFPF/Plan Sets/03_Sheets/Civil/Tunnel Exit 1+93.dgn
PLOT DATE: 8:24:27 AM 11/8/2021

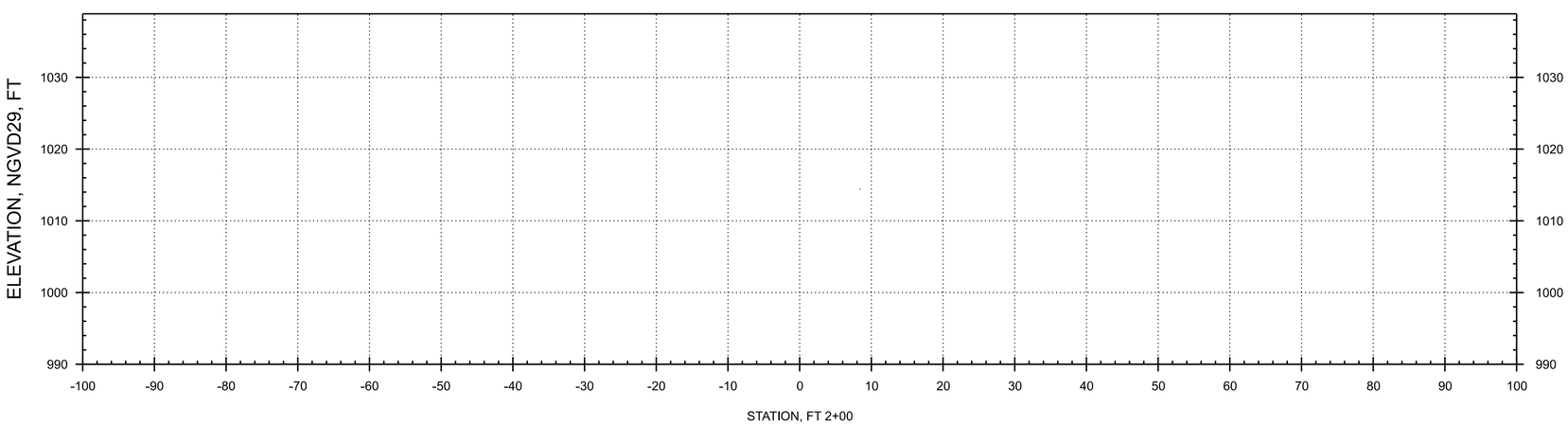

1 TUNNEL EXIT 2+00

SCALE: 1"=10'

0 10' 20'

0 10' 20'

US Army Corps of Engineers®

MARK	DESCRIPTION	DATE

DESIGNED BY:
DRAWN BY:
CHECKED BY:
SUBMITTED BY:
SIZE:
ISSUE DATE:
SOLICITATION NO.:
CONTRACT NO.:
E-56-14-22

U.S. ARMY CORPS OF ENGINEERS
SEATTLE DISTRICT
SEATTLE, WASHINGTON

FY25 P2-488932-HAHDFPF
HOWARD A HANSON DAM FISH PASSAGE FACILITY
GREEN RIVER, WASHINGTON

TUNNEL EXIT
CROSS SECTION 2+00

SHEET ID

G-

35% DESIGN SUBMITTAL

FILE PATH: pw://PWINT-WPC.EIS.DS.USACE.ARMY.MIL:CENWS - Seattle District/Documents/Civil Works/Howard Hanson Dam, WA/FY25_P2-488932_HAHDFPF/Plan Sets/03_Sheets/Civil/Tunnel Exit 2+00.dgn
PLOT DATE: 12:26:51 PM 10/29/2021

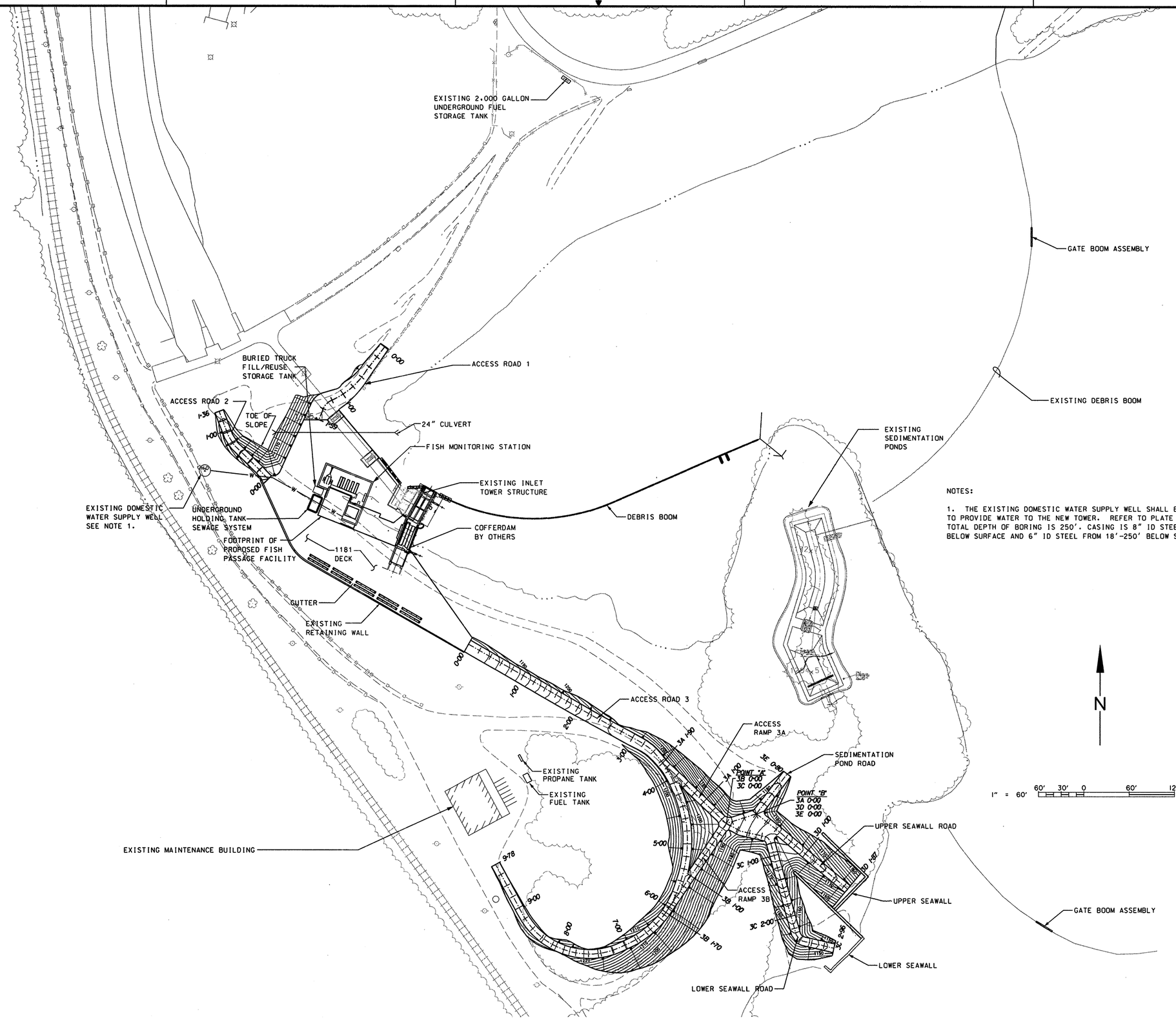

NOTES:

1. THE EXISTING DOMESTIC WATER SUPPLY WELL SHALL BE USED TO PROVIDE WATER TO THE NEW TOWER. REFER TO PLATE M-110. TOTAL DEPTH OF BORING IS 250'. CASING IS 8" ID STEEL FROM 0'-18' BELOW SURFACE AND 6" ID STEEL FROM 18'-250' BELOW SURFACE.

US Army Corps of Engineers
Seattle District

Symbol	Description	Date	App.	Symbol	Description
		/ /			

U.S. ARMY ENGINEER DISTRICT, SEATTLE
CORPS OF ENGINEERS
SEATTLE, WASHINGTON

Designed by: STONE
Drawn by: BARRETT
Checked by: FISCHER
Prepared by:
Date: 16 MAR 06
File #: E-56-14-19
Rev.

ADDITIONAL WATER STORAGE PROJECT
HOWARD HANSON DAM
GREEN RIVER WASHINGTON

UTILITY PLAN

Plate number: C-014
Sheet of

DATE AND TIME PLOTTED: 3/16/2006 4:17:36 PM DESIGN FILE: I:\aecdesigns\hhaw\Civil\HHAWCU01-01.DGN

2009 CIVIL PLATES

CIVIL LEGEND

SURVEY

THEOR./ EXIST.	FOUND/ PROP.	DESCRIPTION (ABBR)
		ANGLE POINT
		BENCH MARK
		REBAR/IRON PIPE
		MONUMENT (IN CASE)
		MONUMENT (SURFACE)
× ELEV	× ELEV	SPOT ELEVATION

EXISTING		THIS CONTRACT
W 8"	WATER LINE & PIPE SIZE	W 8"
SAN 6"	SANITARY SEWER & PIPE SIZE	SS 6"
ST 10"	STORM DRAIN & PIPE SIZE	ST 12"
	STORM DRAIN MANHOLE W/ TOP & INVERT ELEVATIONS	D EL 8.65 IE 6.00
	CATCH BASIN W/ TOP & INVERT ELEVATIONS	CB EL 8.65 IE 6.00
	FIRE HYDRANT W/ OUTLET DIRECTION	
	GATE VALVE	
	PIV GATE VALVE	
	CHECK VALVE	
	BUILDING OR STRUCTURE	
101 1M	INSTRUMENTATION	
	PROPOSED GROUND	
	PROJECT CONSTRUCTION LIMITS	
	TREE	
	VEGETATION	
	LIGHT POLE	
	CONCRETE PAVEMENT	
	LANDSCAPE/HYDROSEED	
250	CONTOUR	250
250.9	SPOT ELEVATION	250.9
	GRAVEL ROAD/SURFACING	

STANDARD LEGEND FOR PAVEMENTS

CONTRACTION JOINTS
- SAWED

CONSTRUCTION JOINTS
- DOWELED, THICKENED EDGE
- DOWELED

THICKENED EDGE BUTT
- ONE SIDE — T T T T
- BOTH SIDES — T T T T / T T T T

EXPANSION JOINTS
- DOWELED — E E E E
- THICKENED EDGE — TE TE TE TE

REINFORCED ODD SHAPED SLABS — R

DRAFTING

SYMBOL	DESCRIPTION (ABBR)
1 T2 C1	DETAIL CALLOUT ON PLAN SHEET
	SECTION CALLOUT ON PLAN SHEET

DETAIL CALLOUT

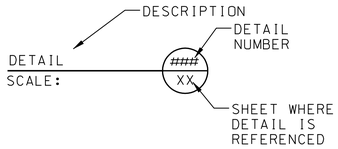

SECTION/ELEVATION CALLOUT

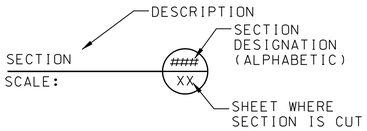

ALTERNATE DETAIL/SECTION/ELEV CALLOUT

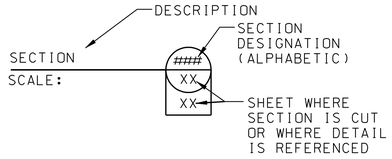

90 DEGREE ANGLE

CIVIL ABBREVIATIONS

AC	ASPHALT
A/G	ABOVEGROUND
BRDG	BRIDGE
CLF	CHAIN LINK FENCE
COR	USACE CONTRACTING OFFICER REPRESENTATIVE
D	DELTA
Dc	DEGREE OF CURVATURE
E	EAST
EL, ELEV	ELEVATION
EMB	EMBANKMENT
EO	EDGE OF
EOA	EDGE OF ASPHALT
EOC	EDGE OF CONCRETE
EOG	EDGE OF GRAVEL
EP	EDGE OF PAVEMENT
EXC	EXCAVATION
EXIST	EXISTING
FIG	FIGURE
FT	FEET/FOOT
H, HORIZ	HORIZONTAL
IE	INVERT
IN	INCH/INCHES
INV	INVERT ELEVATION
L	LENGTH
LF	LINEAL FOOT/FEET
LT	LEFT
MIN	MINIMUM
MISC	MISCELLANEOUS
N	NORTH
NTS	NOT TO SCALE
O/W	OIL/WATER
PCC	PORTLAND CEMENT CONCRETE
PI	POINT OF INTERSECTION
PC	POINT OF CURVATURE
PT	POINT OF TANGENCY
POB	POINT OF BEGINING
POE	POINT OF ENDING
R	RADIUS
STA	STATION
PVMT	PAVEMENT
REQD	REQUIRED
SECT	SECTION
SPEC	SPECIFICATION
STA	STATION
STD	STANDARD
S1	LAYOUT SURVEY CASE AND MONUMENT AND NUMBER
T	TANGENT
TEMP	TEMPORARY
TYP	TYPICAL
U/G	UNDERGROUND
VAR	VARIES
V, VERT	VERTICAL
VPI	VERTICAL POINT OF INTERSECTION
W/	WITH
W.S.	WATER SURFACE
WSDOT	WASHINGTON STATE DEPARTMENT OF TRANSPORTATION

GENERAL NOTES:

1. ELEVATIONS SHOWN ON THESE DRAWINGS ARE BASED ON NGVD 1929 GA., SA., 47., VERTICAL DATUM

2. HORIZONTAL COORDINATES ON THESE DRAWINGS ARE BASED ON THE WASHINGTON STATE PLANE COORDINATE SYSTEM - NAD 27, NORTH ZONE.

3. CONTRACTOR SHALL VERIFY ALL DIMENSIONS BEFORE STARTING WORK AND SHALL IMMEDIATELY NOTIFY THE ENGINEER OF ANY DISCREPANCIES.

4. BEFORE EXCAVATION OR TRENCHING, CONTRACTOR SHALL CALL 1-800-424-5555 TO LOCATE UNDERGROUND UTILITIES. ANY DAMAGE TO EXISTING FACILITIES SHALL BE REPAIRED BY THE CONTRACTOR AT NO COST TO THE OWNER.

5. THE HORIZONTAL AND VERTICAL LOCATION OF EXISTING UTILITIES AND IMPROVEMENTS ARE APPROXIMATE. THE CONTRACTOR SHALL VERIFY THE EXACT LOCATION OF ALL UTILITIES AND IMPROVEMENTS PRIOR TO EXCAVATION TO AVOID DAMAGE AND DISTURBANCE. THE CONTRACTOR IS RESPONSIBLE FOR PROTECTING AND PRESERVING THE INTEGRITY OF ALL EXISTING UTILITIES DURING CONSTRUCTION.

6. ALL DISTANCES SHOWN ON THE DRAWINGS AND DESCRIBED IN THE SPECIFICATIONS SHALL BE INTERPRETED TO REFER TO HORIZONTALLY AND VERTICALLY PROJECTED PLANES UNLESS OTHERWISE NOTED.

7. SITE ACCESS DURING CONSTRUCTION IS LIMITED TO STABILIZED CONSTRUCTION ENTRANCES.

8. ALL SURFACES DISTURBED DURING CONSTRUCTION AND NOT SCHEDULED TO RECEIVE GRAVEL, QUARRY SPALLS, OR OTHER SURFACING SHALL BE SEEDED, FERTILIZED, AND MULCHED IN ACCORDANCE WITH THE SPECIFICATIONS OR AS DIRECTED BY THE COR.

9. THE CONTRACTOR SHALL BE RESPONSIBLE FOR FULL RESTORATION OF ALL EXISTING FEATURES DISTURBED DURING CONSTRUCTION TO THEIR ORIGINAL CONDITION UNLESS OTHERWISE INDICATED BY THE COR.

10. OTHER WORK ON-SITE MAY BE PERFORMED BY OTHER CONTRACTORS IN CONJUNCTION WITH THIS PROJECT. THE CONTRACTOR SHALL BE RESPONSIBLE FOR COORDINATING ALL WORK.

11. EXPECT ROCK FOR EXCAVATIONS BELOW ELEVATION 1165 FEET.

STA NAME	CONTROL POINTS NORTHING	EASTING	ELEVATION	DESCRIPTION
2200	102044.617	1763714.473	1229.962	SET 3 1/2" BRASS CAP STAMPED "CORPS OF ENGINEERS - US ARMY 2200 2008", IN NE CORNER OF CONCRETE PAD FOR PROPANE TANK
2201	103066.831	1763800.796	1227.812	SET 3 1/2" BRASS CAP STAMPED "CORPS OF ENGINEERS - US ARMY 2201 2008", IN CONCRETE
2202	102382.384	1763337.380	1201.535	SET 3 1/2" BRASS CAP STAMPED "CORPS OF ENGINEERS - US ARMY 2202 2008", IN CONCRETE RETAINING WALL
2203 (HOWH)	102647.199	1763137.437	1227.754	FOUND 2 1/2" KING COUNTY BRASS CAP IN CONCRETE.
2204 (5M)	102829.060	1763446.509	1228.874	FOUND 3 1/2" BRASS CAP IN CONC

US Army Corps of Engineers Seattle District

Symbol	Description	Date	Appr.	Symbol	Description
		/ /			

Designed by: KATO
Drawn by: KATO
Checked by: FISCHER
Date: OCT 2009
File: E-56-14-19
Rev.

U.S.ARMY ENGINEER DISTRICT,SEATTLE
CORPS OF ENGINEERS
SEATTLE, WASHINGTON
Prepared by:

ADDITIONAL WATER STORAGE PROJECT
HOWARD HANSON DAM
SYMBOLS, ABBREVIATIONS & GENERAL NOTES
GREEN RIVER WASHINGTON

Plate number: C-001
Sheet of

DATE AND TIME PLOTTED: 1/20/10 11:15:39 AM DESIGN FILE: J:\AECDESIGNS\HHAW\Civil\HHAWC-001C01.DGN

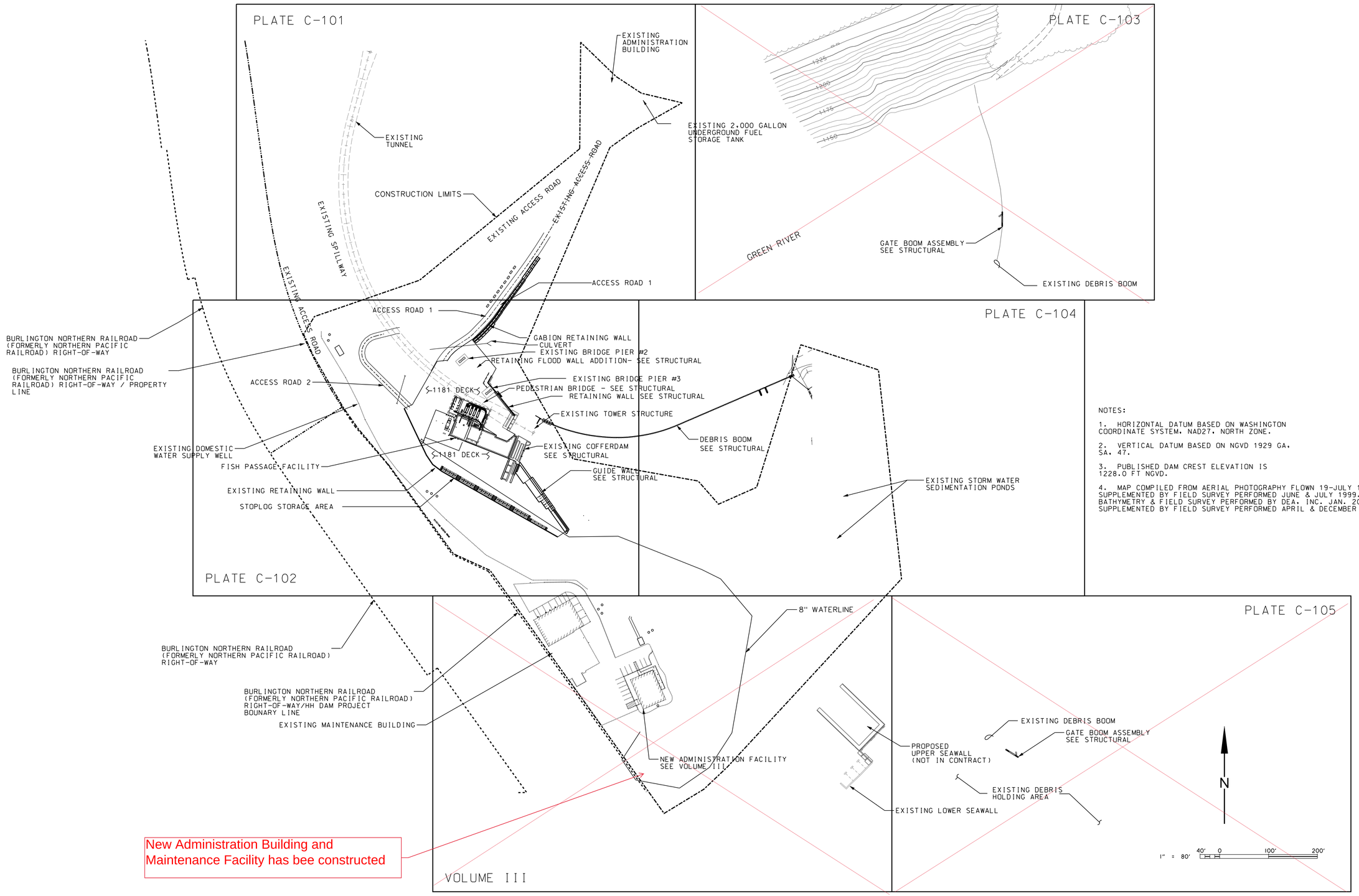

New Administration Building and Maintenance Facility has bee constructed

NOTES:

1. HORIZONTAL DATUM BASED ON WASHINGTON COORDINATE SYSTEM. NAD27. NORTH ZONE.

2. VERTICAL DATUM BASED ON NGVD 1929 GA. SA. 47.

3. PUBLISHED DAM CREST ELEVATION IS 1228.0 FT NGVD.

4. MAP COMPILED FROM AERIAL PHOTOGRAPHY FLOWN 19-JULY 1999. SUPPLEMENTED BY FIELD SURVEY PERFORMED JUNE & JULY 1999. BATHYMETRY & FIELD SURVEY PERFORMED BY DEA. INC. JAN. 2000. SUPPLEMENTED BY FIELD SURVEY PERFORMED APRIL & DECEMBER 2008.

US Army Corps of Engineers
Seattle District

Symbol	Description	Date	Appr.	Symbol	Description
		/ /			

Designed by: KATO
Drawn by: KATO
Checked by: FISCHER
Date: OCT 2009
File: E-56-14-19
Rev.

U.S.ARMY ENGINEER DISTRICT,SEATTLE
CORPS OF ENGINEERS
SEATTLE, WASHINGTON
Prepared by:

ADDITIONAL WATER STORAGE PROJECT
HOWARD HANSON DAM
GENERAL SITE PLAN
GREEN RIVER WASHINGTON

Plate number:
C-002
Sheet of

DATE AND TIME PLOTTED: 1/20/10 11:16:15 AM DESIGN FILE: I:\AECDESIGNS\HHAW\Civil\HHAWC-002G02.DGN

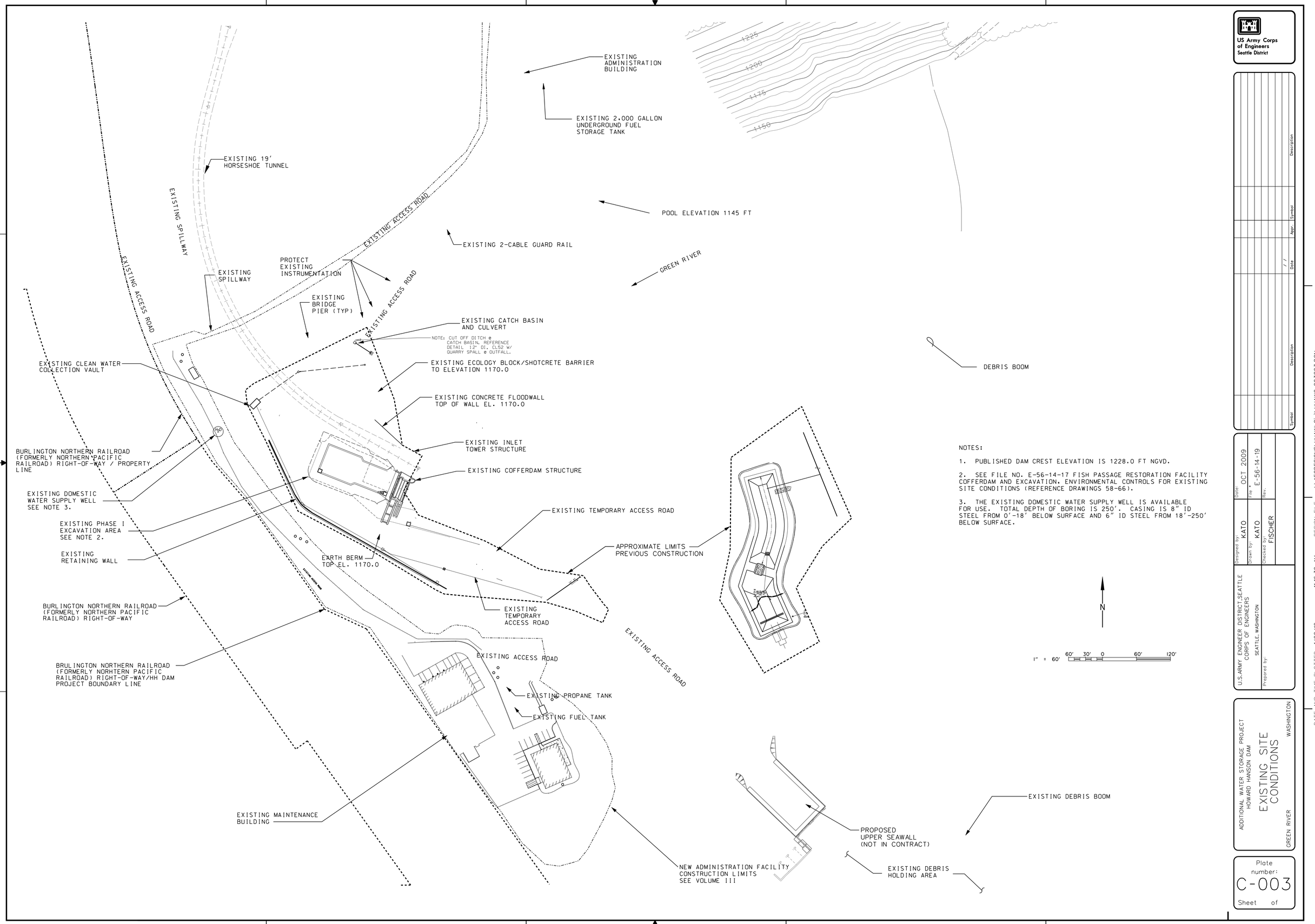

NOTES:

1. PUBLISHED DAM CREST ELEVATION IS 1228.0 FT NGVD.

2. SEE FILE NO. E-56-14-17 FISH PASSAGE RESTORATION FACILITY COFFERDAM AND EXCAVATION, ENVIRONMENTAL CONTROLS FOR EXISTING SITE CONDITIONS (REFERENCE DRAWINGS 58-66).

3. THE EXISTING DOMESTIC WATER SUPPLY WELL IS AVAILABLE FOR USE. TOTAL DEPTH OF BORING IS 250'. CASING IS 8" ID STEEL FROM 0'-18' BELOW SURFACE AND 6" ID STEEL FROM 18'-250' BELOW SURFACE.

US Army Corps of Engineers
Seattle District

Symbol	Description	Date	Appr.	Symbol	Description
		/ /			

Designed by: KATO
Drawn by: KATO
Checked by: FISCHER
Date: OCT 2009
File: E-56-14-19
Rev.

U.S.ARMY ENGINEER DISTRICT,SEATTLE
CORPS OF ENGINEERS
SEATTLE, WASHINGTON
Prepared by:

ADDITIONAL WATER STORAGE PROJECT
HOWARD HANSON DAM
EXISTING SITE CONDITIONS
GREEN RIVER WASHINGTON

Plate number:
C-003
Sheet of

ELEVATION (FT)

DATE AND TIME PLOTTED: 1/20/10 11:16:30 AM DESIGN FILE: I:\AECDESIGNS\HHAW\Civil\HHAWC-003G03.DGN

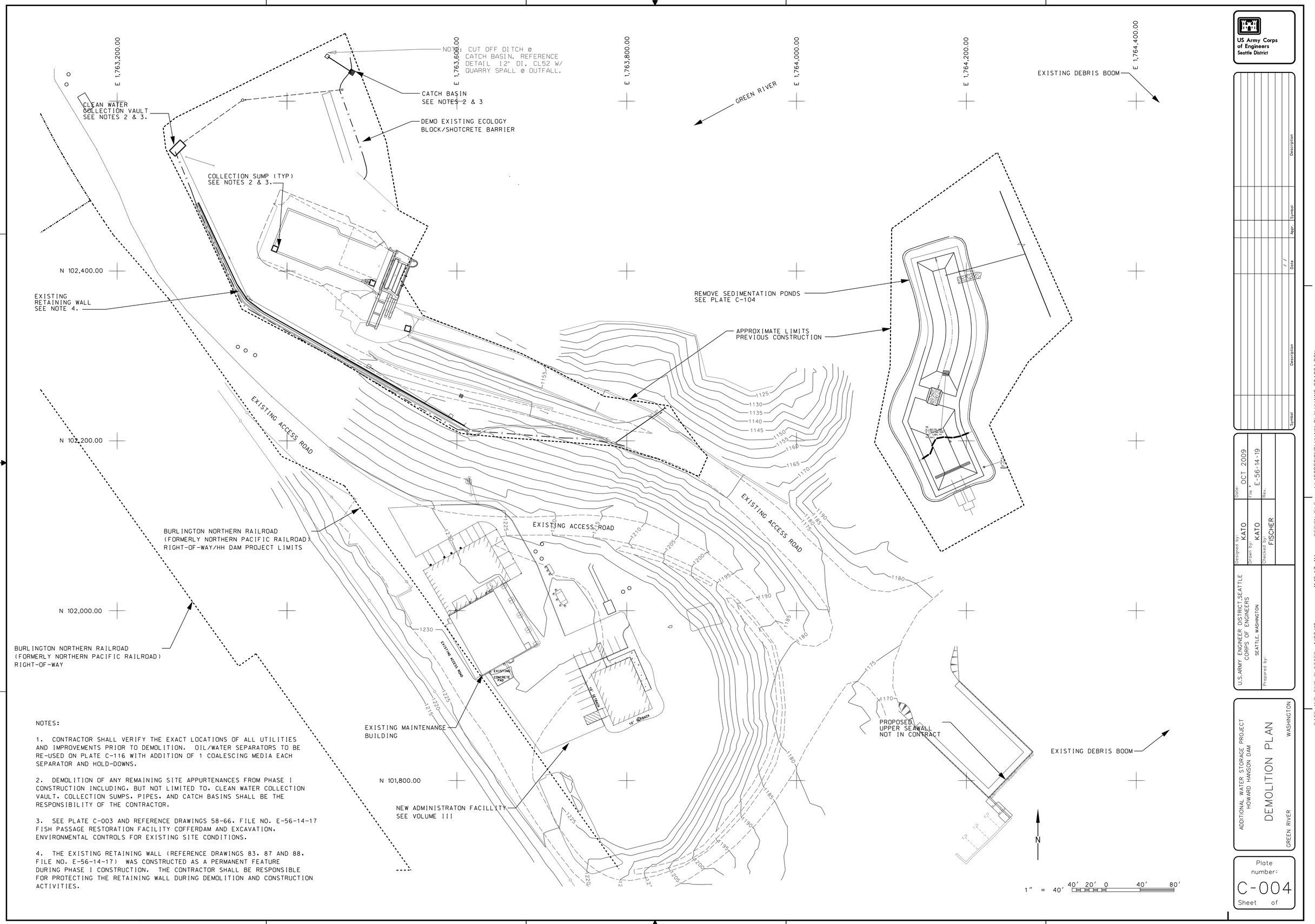

NOTES:

1. CONTRACTOR SHALL VERIFY THE EXACT LOCATIONS OF ALL UTILITIES AND IMPROVEMENTS PRIOR TO DEMOLITION. OIL/WATER SEPARATORS TO BE RE-USED ON PLATE C-116 WITH ADDITION OF 1 COALESCING MEDIA EACH SEPARATOR AND HOLD-DOWNS.

2. DEMOLITION OF ANY REMAINING SITE APPURTENANCES FROM PHASE I CONSTRUCTION INCLUDING, BUT NOT LIMITED TO, CLEAN WATER COLLECTION VAULT, COLLECTION SUMPS, PIPES, AND CATCH BASINS SHALL BE THE RESPONSIBILITY OF THE CONTRACTOR.

3. SEE PLATE C-003 AND REFERENCE DRAWINGS 58-66, FILE NO. E-56-14-17 FISH PASSAGE RESTORATION FACILITY COFFERDAM AND EXCAVATION, ENVIRONMENTAL CONTROLS FOR EXISTING SITE CONDITIONS.

4. THE EXISTING RETAINING WALL (REFERENCE DRAWINGS 83, 87 AND 88, FILE NO. E-56-14-17) WAS CONSTRUCTED AS A PERMANENT FEATURE DURING PHASE I CONSTRUCTION. THE CONTRACTOR SHALL BE RESPONSIBLE FOR PROTECTING THE RETAINING WALL DURING DEMOLITION AND CONSTRUCTION ACTIVITIES.

US Army Corps of Engineers
Seattle District

Symbol	Description	Date	Appr.	Symbol	Description
		/ /			

Designed by: KATO
Drawn by: KATO
Checked by: FISCHER
Date: OCT 2009
File #: E-56-14-19
Rev.

U.S.ARMY ENGINEER DISTRICT,SEATTLE
CORPS OF ENGINEERS
SEATTLE, WASHINGTON
Prepared by:

ADDITIONAL WATER STORAGE PROJECT
HOWARD HANSON DAM
DEMOLITION PLAN
GREEN RIVER WASHINGTON

Plate number:
C-004
Sheet of

DATE AND TIME PLOTTED: 1/20/10 11:16:47 AM DESIGN FILE: I:\AECDESIGNS\HHAW\Civil\HHAWC-004C004.DGN

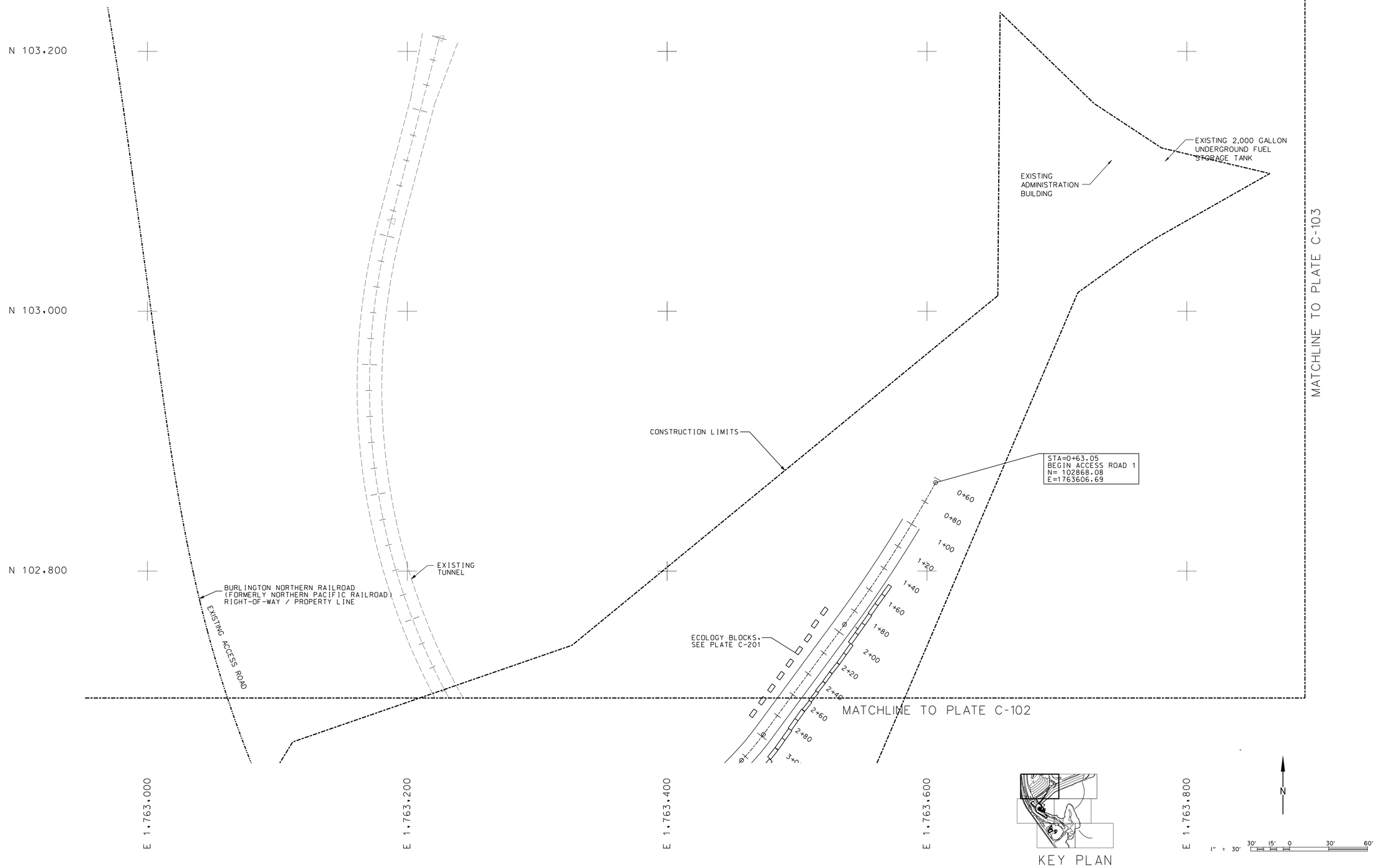

US Army Corps of Engineers
Seattle District

Symbol	Description	Date	Appr.	Symbol	Description
		/ /			

Designed by: KATO
Drawn by: KATO
Checked by: FISCHER
Date: OCT 2009
File: E-56-14-19
Rev.

U.S. ARMY ENGINEER DISTRICT, SEATTLE
CORPS OF ENGINEERS
SEATTLE, WASHINGTON
Prepared by:

ADDITIONAL WATER STORAGE PROJECT
HOWARD HANSON DAM
GREEN RIVER WASHINGTON

SITE PLAN 1
ACCESS ROAD 1

Plate number:
C-101
Sheet of

DATE AND TIME PLOTTED: 1/20/10 11:17:13 AM DESIGN FILE: F:\AECDESIGNS\HHAW\Civil\HHAWC-101S01.DGN

MATCHLINE TO PLATE C-101

CONSTRUCTION LIMITS

STA=2+55.00
END ACCESS ROAD 2
N= 102632.44
E=1763252.13

STA=4+38.43
END ACCESS ROAD 1
N= 102576.97
E=1763374.74

STA=0+40.00
BEGIN ACCESS ROAD 2
N= 102482.88
E=1763306.93

EXISTING ACCESS ROAD

ACCESS ROAD 1
SEE PLATE C-201

EXISTING BRIDGE PIER #2

GABION RETAINING WALL
SEE PLATE C-202

CONCRETE FLOOD RETAINING WALL ADDITION
SEE PLATE S-253

FISH MONITORING STATION
SEE FISHPRO PLATES SF1 - EF4

EXISTING BRIDGE PIER #3

STAIRS AND CONCRETE FLOOD
RETAINING WALL ADDITION
SEE PLATE S-253

CATWALK

EXISTING INLET
TOWER STRUCTURE

DEBRIS BOOM
SEE PLATE S-100

1181
DECK

FISH TRUCK RAMP
SEE PLATE C-204

EXISTING DOMESTIC
WATER SUPPLY WELL

MONITORING STATION
UNDERGROUND VAULT
SEE FISHPRO

SEWAGE HOLDING TANK
SEE PLATE C-507

FISH PASSAGE
FACILITY SEE STRUCTURAL

STOPLOG STORAGE RACK
SEE PLATE C-106

FISH PASSAGE FACILITY

EXISTING
COFFERDAM

DEWATERING
STOPLOG STOP
SEE REFERENCE DRAWINGS

1181 DECK
SEE NOTE 2.

GUIDE WALL, SEE PLATE S-255
GANTRY CRANE RAILS
SEE PLATE S-130
EXTENT OF GANTRY CRANE RAILS

EXTENT OF CRANE ENVELOPE

EXISTING
RETAINING WALL

EXISTING ACCESS ROAD

ACCESS ROAD 3
NOT IN CONTRACT

NORTHERN PACIFIC RAILROAD
RIGHT-OF-WAY / PROPERTY LINE

NORTHERN PACIFIC RAILROAD
RIGHT-OF-WAY

MATCHLINE TO PLATE C-104

N 102,600

N 102,400

N 102,200

E 1,763,000

E 1,763,200

E 1,763,400

E 1,763,600

NOTES:

1. ROADWAY SURFACES SHALL BE GRAVEL WEARING COURSE UNLESS OTHERWISE SHOWN ON THE DRAWINGS.

2. THE 1181 DECK SURFACE SHALL BE 8" PORTLAND CEMENT CONCRETE PAVEMENT. SEE PLATES C-109 AND C-110.

KEY PLAN

1" = 30' 30' 15' 0 30' 60'

N

US Army Corps of Engineers
Seattle District

Symbol	Description	Date	Appr.	Symbol	Description
		/ /			

Designed by: KATO
Drawn by: KATO
Checked by: FISCHER
Date: OCT 2009
File: E-56-14-19
Rev.

U.S.ARMY ENGINEER DISTRICT,SEATTLE
CORPS OF ENGINEERS
SEATTLE, WASHINGTON
Prepared by:

ADDITIONAL WATER STORAGE PROJECT
HOWARD HANSON DAM
SITE PLAN 2
1181 DECK
GREEN RIVER WASHINGTON

Plate number:
C-102
Sheet of

DATE AND TIME PLOTTED: 1/20/10 11:17:45 AM DESIGN FILE: I:\AECDESIGNS\HHAW\Civil\HHAWC-102S02.DGN

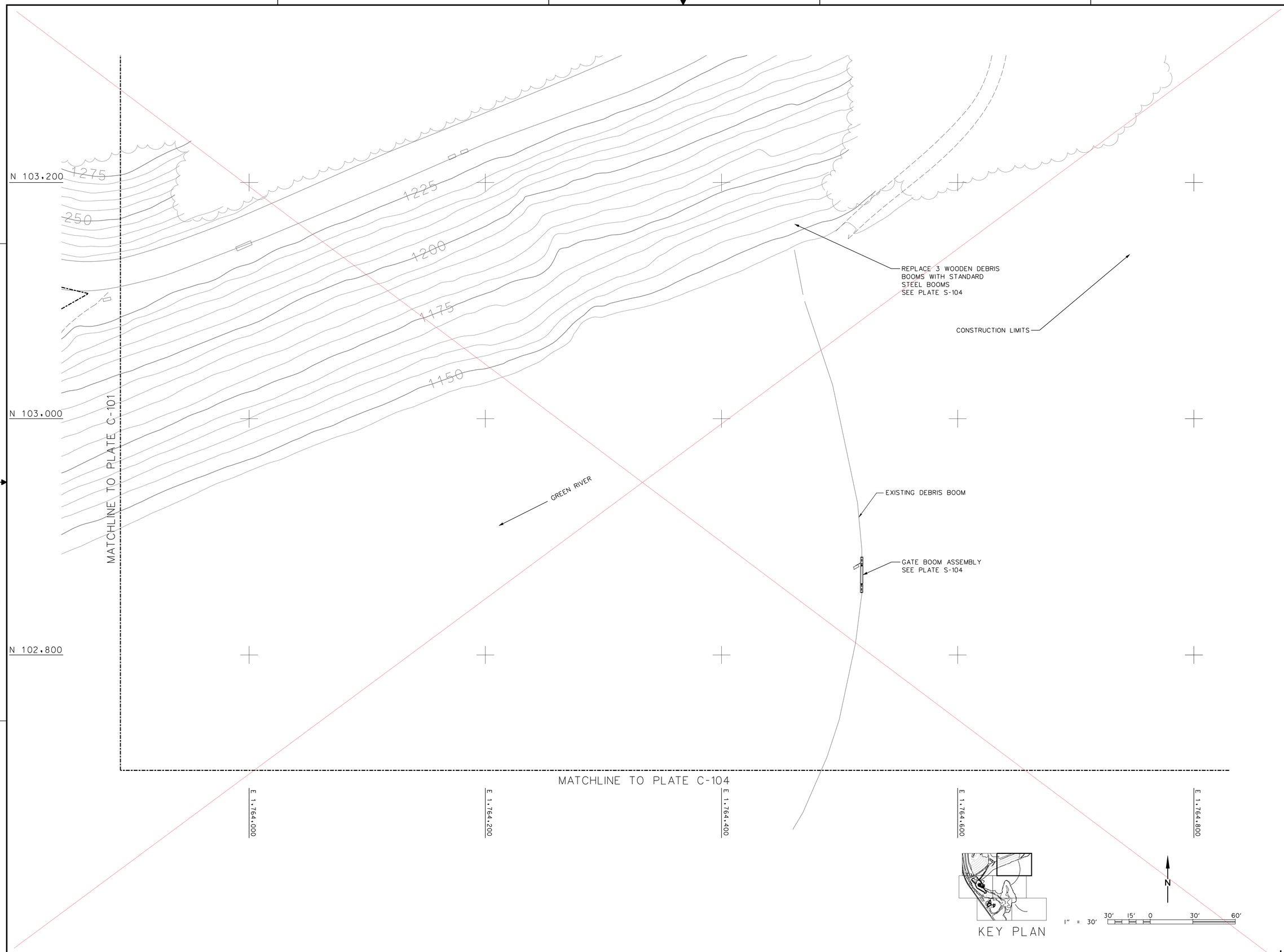

US Army Corps of Engineers
Seattle District

Symbol	Description	Date	Appr.	Symbol	Description
		/ /			

Designed by: KATO
Drawn by: KATO
Checked by: FISCHER
Date: OCT 2009
File #: E-56-14-19
Rev.

U.S. ARMY ENGINEER DISTRICT, SEATTLE
CORPS OF ENGINEERS
SEATTLE, WASHINGTON
Prepared by:

ADDITIONAL WATER STORAGE PROJECT
HOWARD HANSON DAM
SITE PLAN 3
EAST LOG BOOM
GREEN RIVER WASHINGTON

Plate number:
C-103
Sheet of

DATE AND TIME PLOTTED: 1/20/10 11:18:21 AM DESIGN FILE: I:\AECDESIGNS\HHAW\Civil\HHAWC-103S03.DGN

Ponds have been abandoned since the 2009 construction

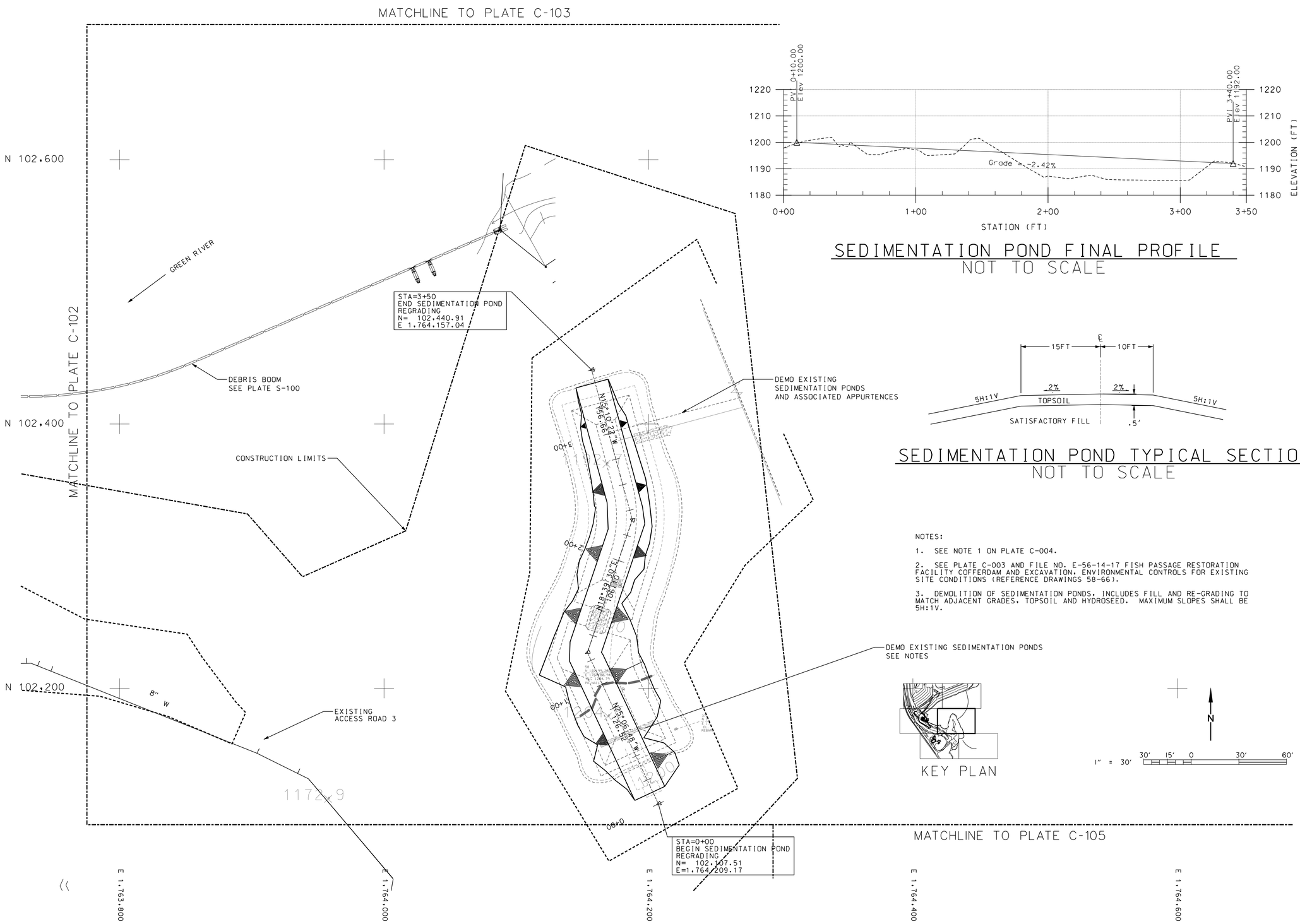

SEDIMENTATION POND FINAL PROFILE
NOT TO SCALE

SEDIMENTATION POND TYPICAL SECTION
NOT TO SCALE

NOTES:

1. SEE NOTE 1 ON PLATE C-004.

2. SEE PLATE C-003 AND FILE NO. E-56-14-17 FISH PASSAGE RESTORATION FACILITY COFFERDAM AND EXCAVATION. ENVIRONMENTAL CONTROLS FOR EXISTING SITE CONDITIONS (REFERENCE DRAWINGS 58-66).

3. DEMOLITION OF SEDIMENTATION PONDS. INCLUDES FILL AND RE-GRADING TO MATCH ADJACENT GRADES. TOPSOIL AND HYDROSEED. MAXIMUM SLOPES SHALL BE 5H:1V.

KEY PLAN

N

1" = 30' 30' 15' 0 30' 60'

US Army Corps of Engineers
Seattle District

Symbol	Description	Date	Appr.	Description
		/ /		

U.S.ARMY ENGINEER DISTRICT,SEATTLE
CORPS OF ENGINEERS
SEATTLE, WASHINGTON

Designed by: KATO
Drawn by: KATO
Checked by: FISCHER
Prepared by:
Date: OCT 2009
File: E-56-14-19
Rev.

ADDITIONAL WATER STORAGE PROJECT
HOWARD HANSON DAM
SITE PLAN 4
SEDIMENTATION POND
DEMOLITION
GREEN RIVER WASHINGTON

Plate number:
C-104
Sheet of

DATE AND TIME PLOTTED: 1/20/10 11:18:43 AM DESIGN FILE: I:\AECDESIGNS\HHAW\Civil\HHAWC-104S04.DGN

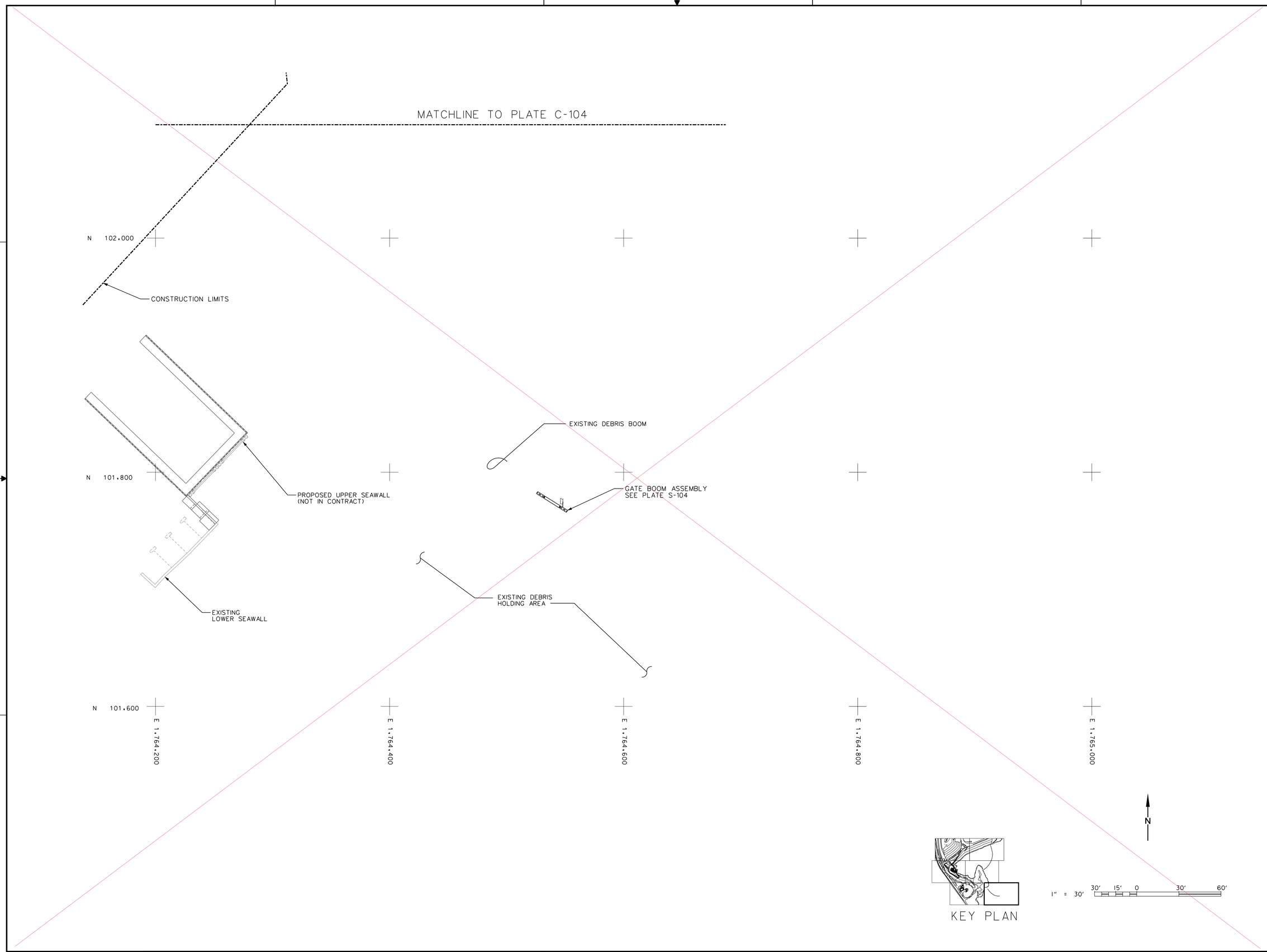

US Army Corps of Engineers
Seattle District

Symbol	Description	Date	Appr.	Symbol	Description
		/ /			

U.S. ARMY ENGINEER DISTRICT, SEATTLE
CORPS OF ENGINEERS
SEATTLE, WASHINGTON

Prepared by:

Designed by: KATO
Drawn by: KATO
Checked by: FISCHER
Date: OCT 2009
File #: E-56-14-19
Rev.

ADDITIONAL WATER STORAGE PROJECT
HOWARD HANSON DAM
GREEN RIVER

SITE PLAN 5
SEAWALL LOG BOOM

WASHINGTON

Plate number:
C-105
Sheet of

DATE AND TIME PLOTTED: 1/20/10 11:19:00 AM DESIGN FILE: I:\AECDESIGNS\HHAW\Civil\HHAWC-105S05.DGN

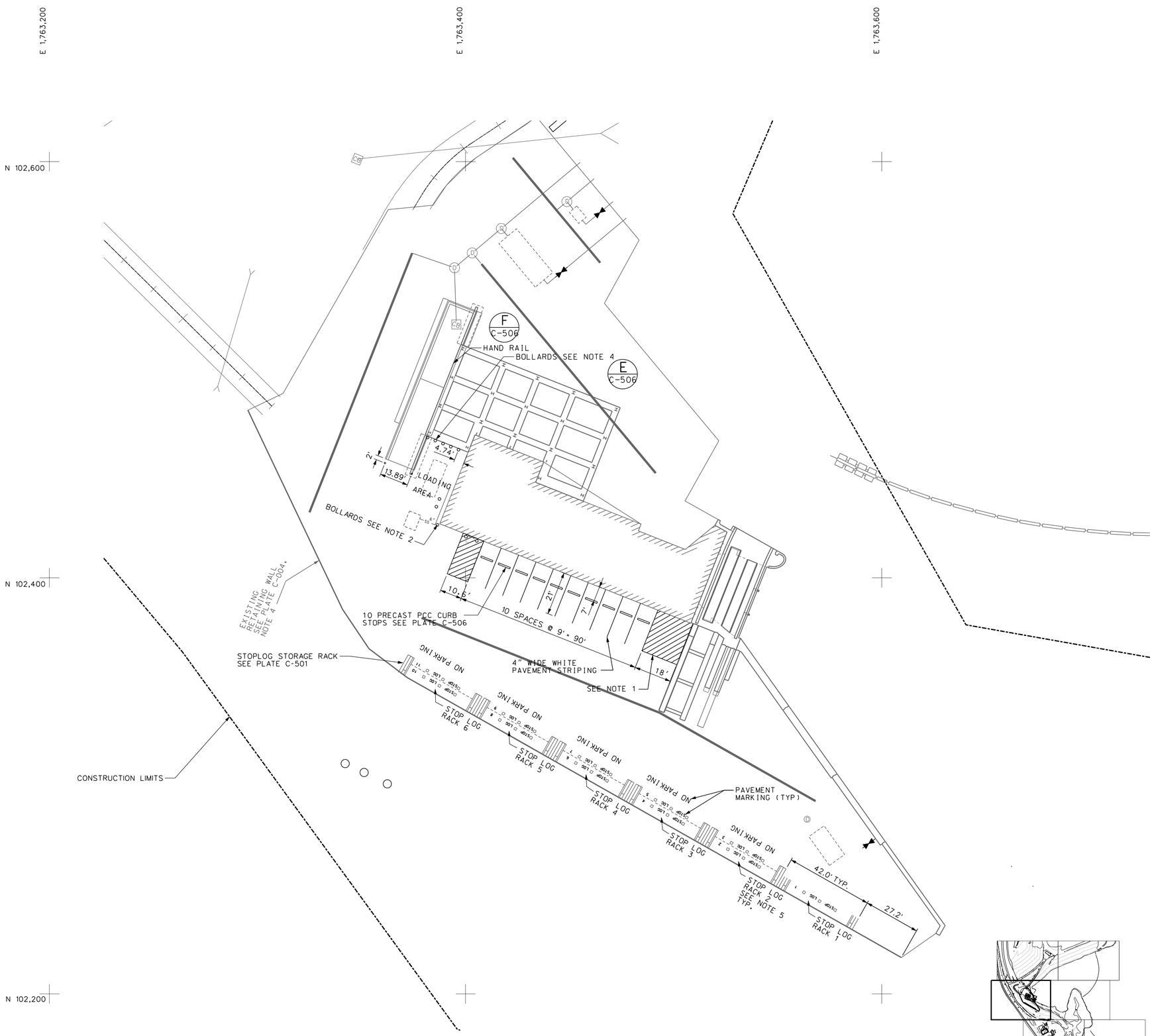

NOTES:

1. PAINTED ISLAND STRIPING SHALL BE 4" WHITE STRIPING AT 45 DEGREES, 2' OC.
2. BOLLARDS 7" AWAY FROM STRUCTURES, UNLESS OTHERWISE NOTED.
3. BOLLARDS 4 @ 10' EACH WAY.
4. BOLLARDS 5 @ 4' 0.6' AWAY FROM BUILDING.
5. LABEL STOPLOG RACKS ON CONCRETE RETAINING WALL. SEE TABLE 1 AND LETTERING SHALL BE AS SHOWN THIS PLATE.

TABLE 1
STOPLOG RACK 1 STOPLOG 1
STOPLOG RACK 2 STOPLOG 2 STOPLOG 3
STOPLOG RACK 3 STOPLOG 4 STOPLOG 5
STOPLOG RACK 4 STOPLOG 6 STOPLOG 7
STOPLOG RACK 5 STOPLOG 8 STOPLOG 9
STOPLOG RACK 6 STOPLOG 10 STOPLOG 11

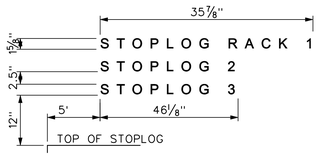

STOP LOG RACK LABEL
NOT TO SCALE

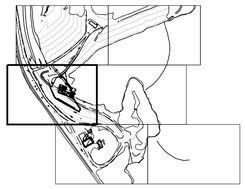

KEY PLAN

N

1" = 20' 10' 5' 0 20' 40'

US Army Corps of Engineers
Seattle District

Symbol	Description	Date	Appr.	Symbol	Description
		/ /			

Designed by: KATO
Drawn by: KATO
Checked by: FISCHER
Date: OCT 2009
File # E-56-14-19
Rev.

U.S. ARMY ENGINEER DISTRICT, SEATTLE
CORPS OF ENGINEERS
SEATTLE, WASHINGTON
Prepared by:

ADDITIONAL WATER STORAGE PROJECT
HOWARD HANSON DAM
GREEN RIVER WASHINGTON

PAVEMENT MARKING PLAN

Plate number: C-106
Sheet of

DATE AND TIME PLOTTED: 1/20/10 11:19:22 AM DESIGN FILE: I:\AECDESIGNS\HHAW\Civil\HHAWC-106S06.DGN

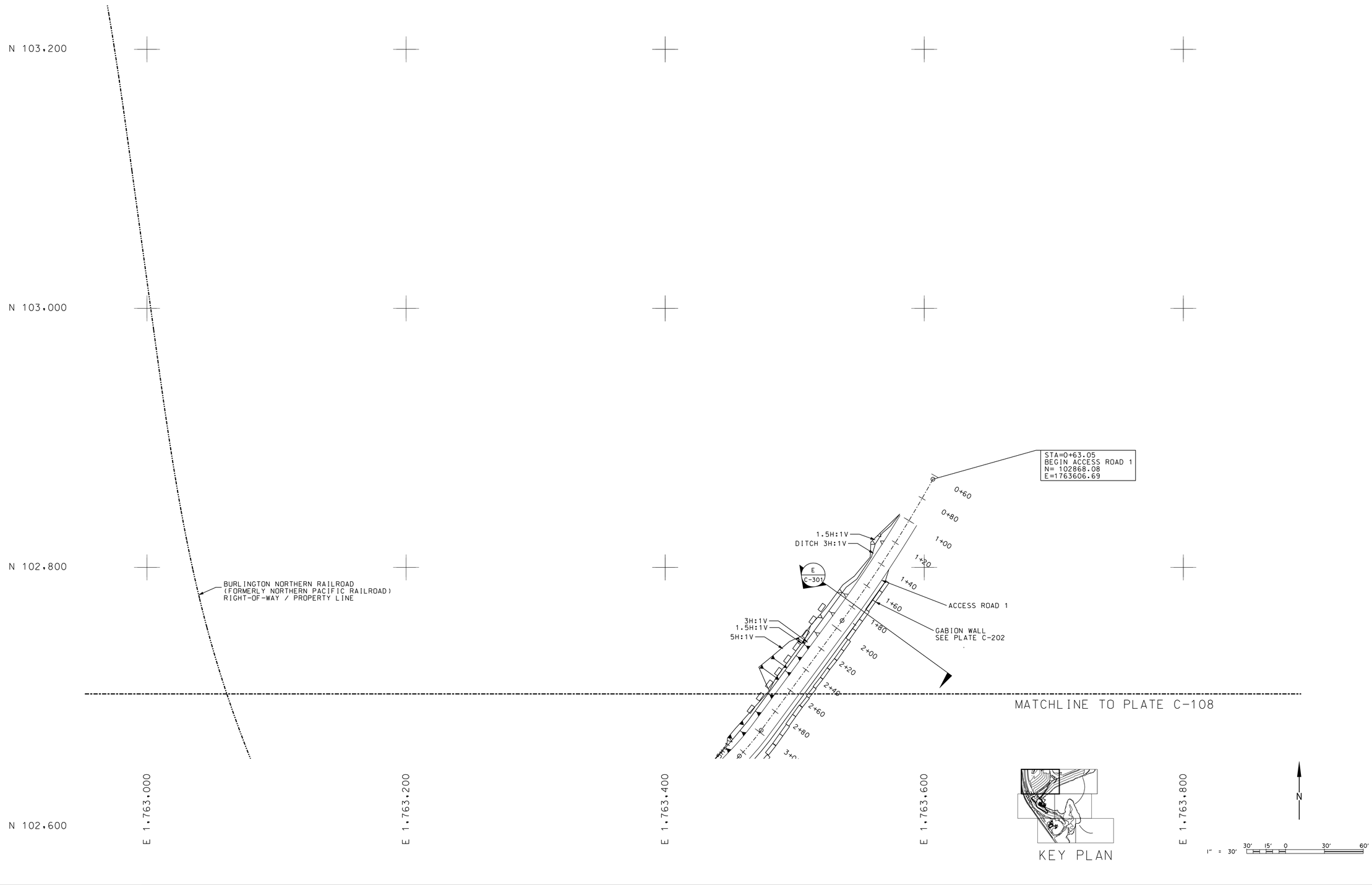

US Army Corps of Engineers
Seattle District

Symbol	Description	Date	Appr.	Symbol	Description
		/ /			

Designed by: KATO
Drawn by: KATO
Checked by: FISCHER
Date: OCT 2009
File # E-56-14-19
Rev.

U.S. ARMY ENGINEER DISTRICT, SEATTLE
CORPS OF ENGINEERS
SEATTLE, WASHINGTON
Prepared by:

ADDITIONAL WATER STORAGE PROJECT
HOWARD HANSON DAM
GRADING PLAN 1
GREEN RIVER WASHINGTON

Plate number:
C-107
Sheet of

DATE AND TIME PLOTTED: 1/20/10 11:19:31 AM DESIGN FILE: I:\AECDESIGNS\HHAW\Civil\HHAWC-107G01.DGN

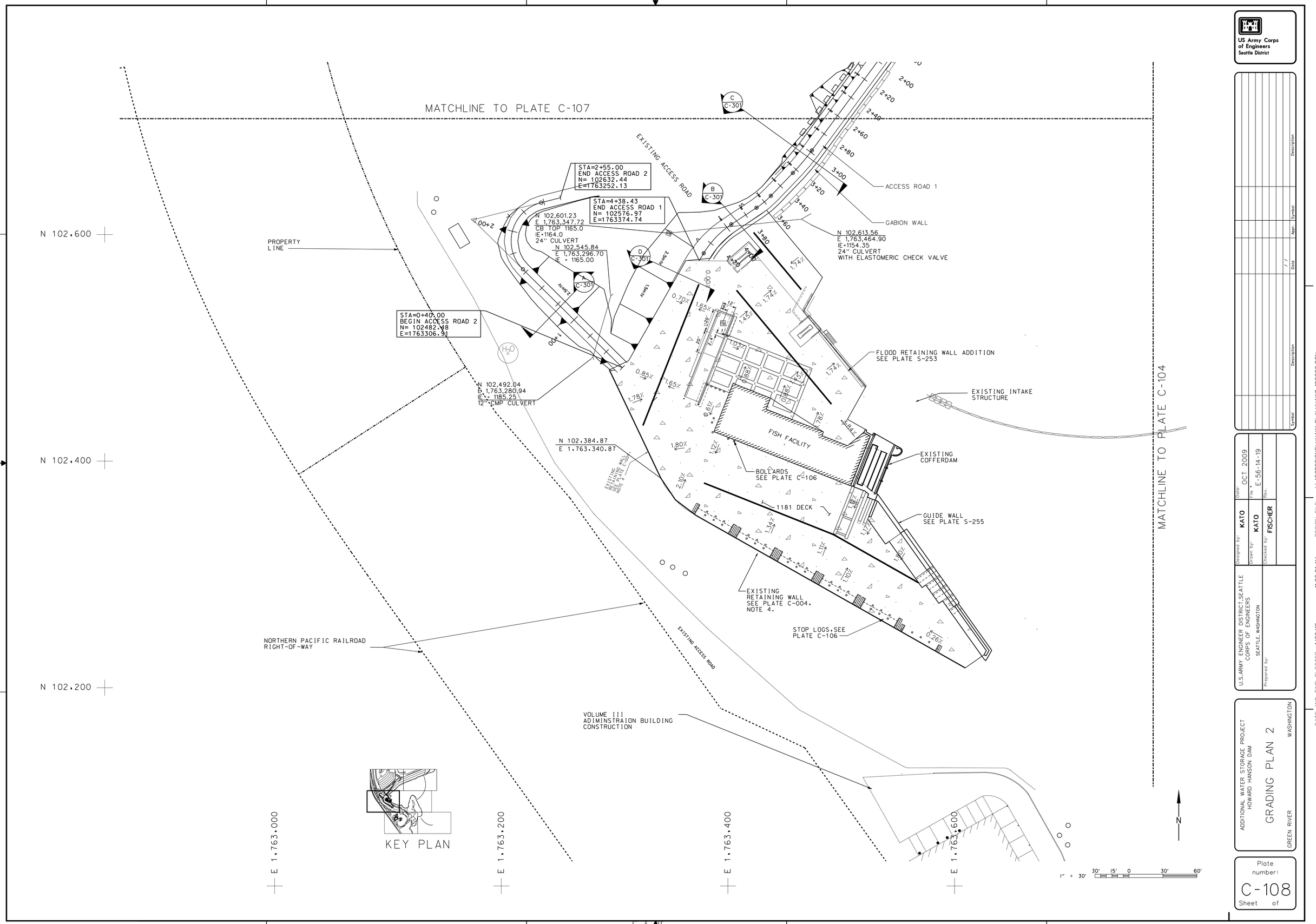
MATCHLINE TO PLATE C-107
MATCHLINE TO PLATE C-104
EXISTING ACCESS ROAD
STA=2+55.00
END ACCESS ROAD 2
N= 102632.44
E=1763252.13
STA=4+38.43
END ACCESS ROAD 1
N= 102576.97
E=1763374.74
N 102,601.23
E 1,763,347.72
CB TOP 1165.0
IE=1164.0
24" CULVERT
N 102,545.84
E 1,763,296.70
IE = 1165.00
STA=0+40.00
BEGIN ACCESS ROAD 2
N= 102482.48
E=1763306.91
N 102,492.04
E 1,763,280.94
IE = 1185.25
12" CMP CULVERT
N 102,384.87
E 1,763,340.87
PROPERTY LINE
ACCESS ROAD 1
GABION WALL
N 102,613.56
E 1,763,464.90
IE=1154.35
24" CULVERT
WITH ELASTOMERIC CHECK VALVE
FLOOD RETAINING WALL ADDITION
SEE PLATE S-253
EXISTING INTAKE STRUCTURE
FISH FACILITY
EXISTING COFFERDAM
BOLLARDS
SEE PLATE C-106
1181 DECK
GUIDE WALL
SEE PLATE S-255
EXISTING RETAINING WALL
SEE PLATE C-004,
NOTE 4.
STOP LOGS,SEE
PLATE C-106
NORTHERN PACIFIC RAILROAD
RIGHT-OF-WAY
VOLUME III
ADIMINSTRAION BUILDING
CONSTRUCTION
N 102,600
N 102,400
N 102,200
E 1,763,000
E 1,763,200
E 1,763,400
E 1,763,600
KEY PLAN
1" = 30'
30' 15' 0 30' 60'
US Army Corps of Engineers
Seattle District
Designed by: KATO
Drawn by: KATO
Checked by: FISCHER
Date: OCT 2009
File: E-56-14-19
Rev.
U.S.ARMY ENGINEER DISTRICT,SEATTLE
CORPS OF ENGINEERS
SEATTLE, WASHINGTON
Prepared by:
ADDITIONAL WATER STORAGE PROJECT
HOWARD HANSON DAM
GRADING PLAN 2
GREEN RIVER
WASHINGTON
Plate number:
C-108
Sheet of
DATE AND TIME PLOTTED: 1/20/10
11:20:01 AM
DESIGN FILE: I:\AECDESIGNS\HHAW\Civil\HHAWC-108G02.DGN

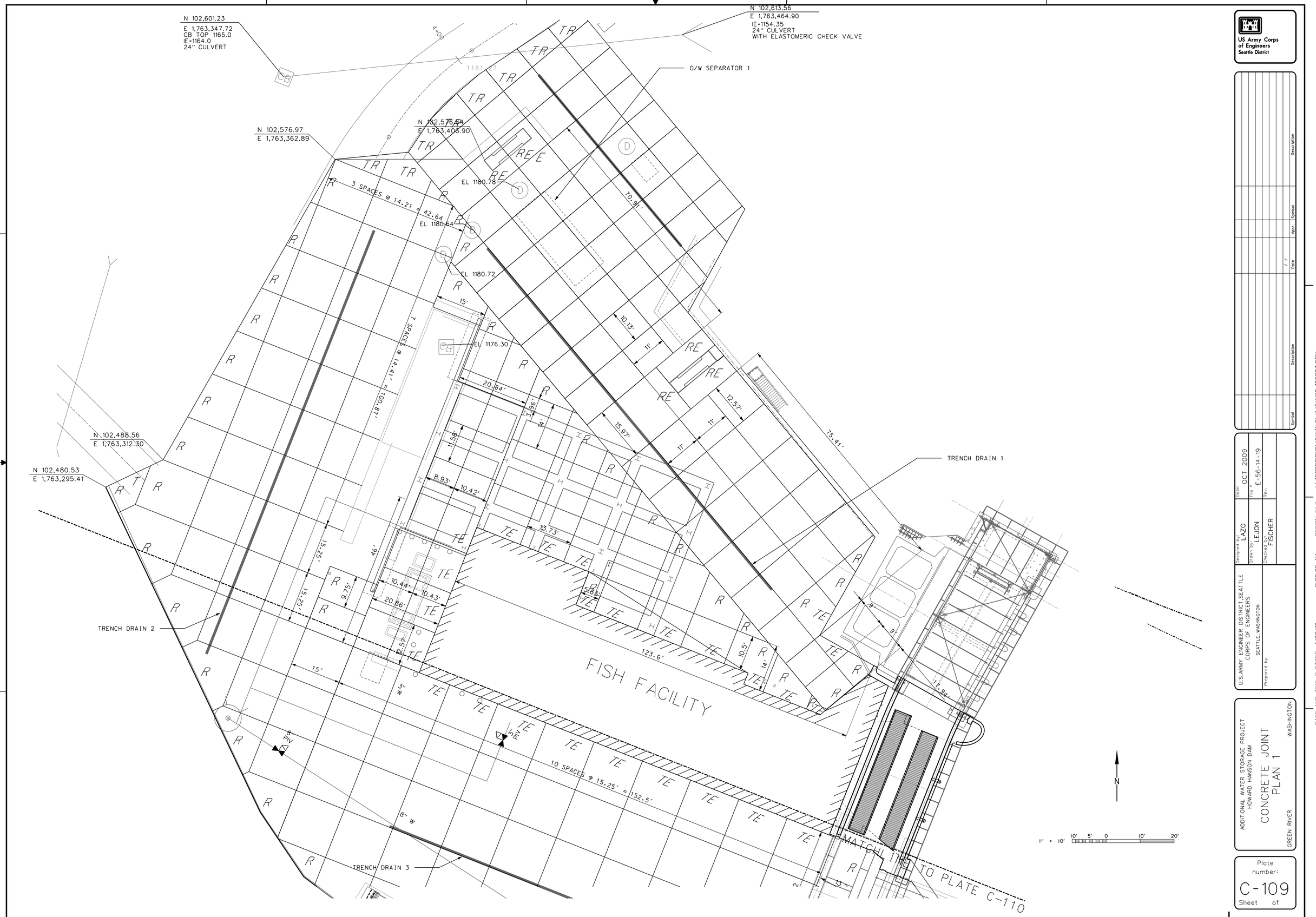
N 102,601.23
E 1,763,347.72
CB TOP 1165.0
IE=1164.0
24" CULVERT
N 102,613.56
E 1,763,464.90
IE=1154.35
24" CULVERT
WITH ELASTOMERIC CHECK VALVE
O/W SEPARATOR 1
N 102,576.97
E 1,763,362.89
N 102,576.64
E 1,763,408.90
EL 1180.78
3 SPACES @ 14.21' = 42.64'
EL 1180.64
EL 1180.72
7 SPACES @ 14.41' = 100.87'
EL 1176.30
N 102,488.56
E 1,763,312.30
N 102,480.53
E 1,763,295.41
TRENCH DRAIN 1
TRENCH DRAIN 2
TRENCH DRAIN 3
FISH FACILITY
10 SPACES @ 15.25' = 152.5'
MATCH LINE TO PLATE C-110
1" = 10'
US Army Corps of Engineers
Seattle District
U.S. ARMY ENGINEER DISTRICT, SEATTLE
CORPS OF ENGINEERS
SEATTLE, WASHINGTON
Designed by: LAZO
Drawn by: LEJON
Checked by: FISCHER
Date: OCT 2009
File: E-56-14-19
Rev.
ADDITIONAL WATER STORAGE PROJECT
HOWARD HANSON DAM
CONCRETE JOINT
PLAN 1
GREEN RIVER
WASHINGTON
Plate number:
C-109
Sheet of
DATE AND TIME PLOTTED: 1/20/10 11:20:26 AM
DESIGN FILE: I:\AECDESIGNS\HHAW\Civil\HHAWC-109C03.DGN

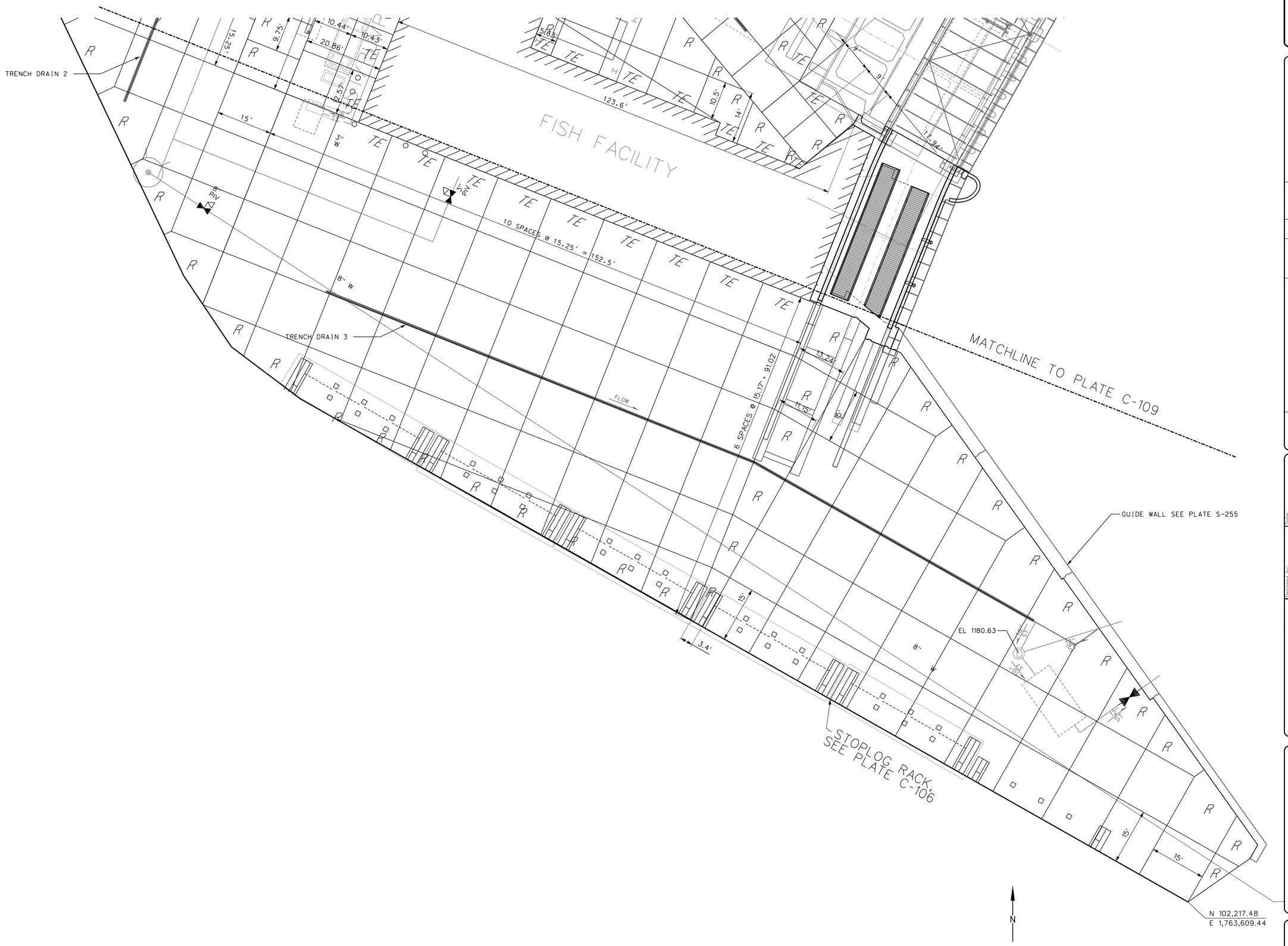

US Army Corps of Engineers
Seattle District

Symbol	Description	Date	Appr.	Symbol	Description
		/ /			

Designed by: LAZO
Drawn by: LEJON
Checked by: FISCHER
Date: OCT 2009
File: E-56-14-19
Rev.

U.S. ARMY ENGINEER DISTRICT, SEATTLE
CORPS OF ENGINEERS
SEATTLE, WASHINGTON
Prepared by:

ADDITIONAL WATER STORAGE PROJECT
HOWARD HANSON DAM
CONCRETE JOINT
PLAN 2
GREEN RIVER WASHINGTON

Plate number:
C-110
Sheet of

DATE AND TIME PLOTTED: 1/20/10 11:20:40 AM DESIGN FILE: F:\AECDESIGNS\HHAW\Civil\HHAWC-110C04.DGN

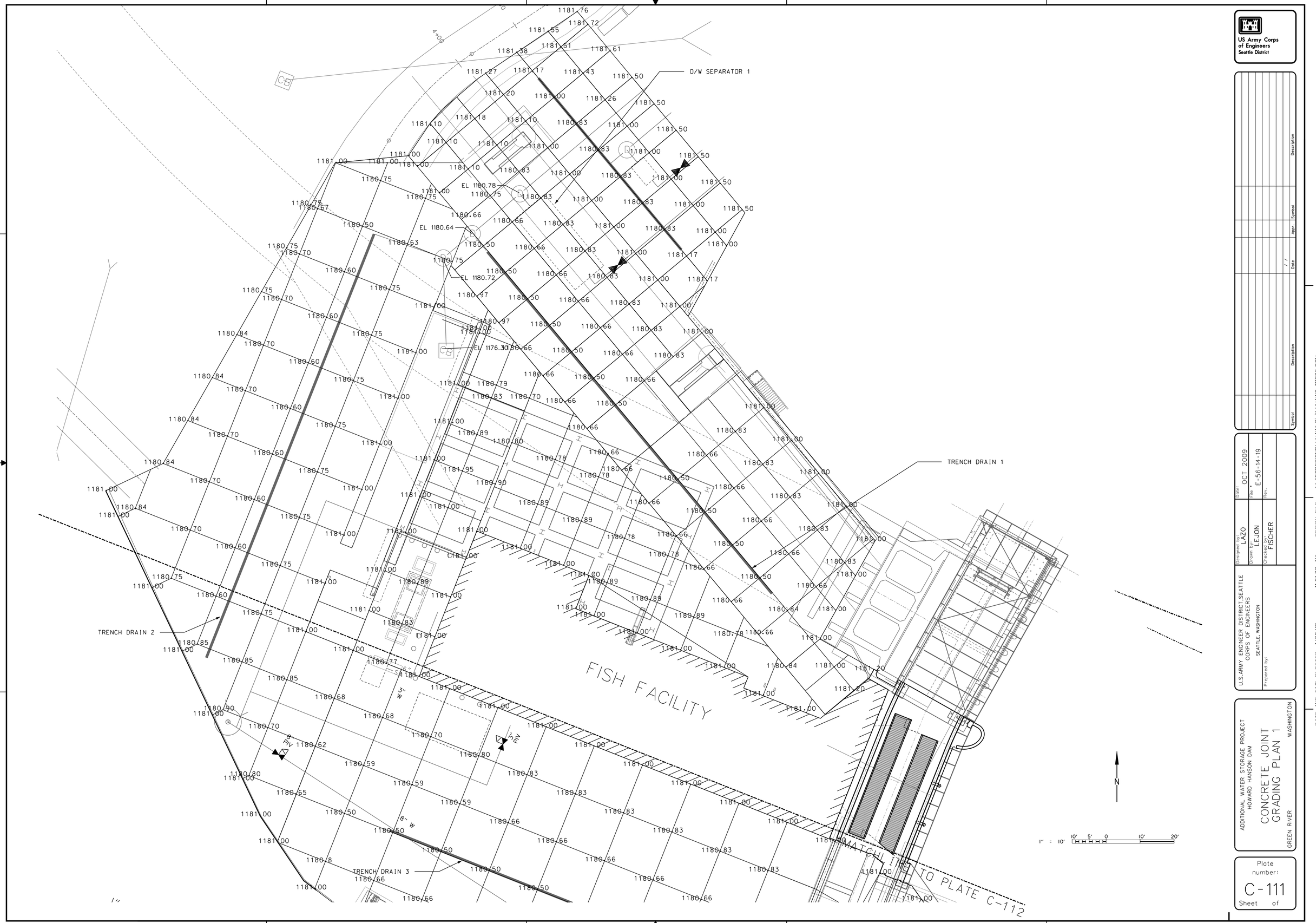

US Army Corps of Engineers
Seattle District

Symbol	Description	Date	Appr.	Symbol	Description
		/ /			

Designed by: LAZO
Drawn by: LEJON
Checked by: FISCHER
Date: OCT 2009
File: E-56-14-19
Rev.

U.S.ARMY ENGINEER DISTRICT,SEATTLE
CORPS OF ENGINEERS
SEATTLE, WASHINGTON

Prepared by:

ADDITIONAL WATER STORAGE PROJECT
HOWARD HANSON DAM

CONCRETE JOINT GRADING PLAN 1

GREEN RIVER WASHINGTON

Plate number:
C-111
Sheet of

DATE AND TIME PLOTTED: 1/20/10 11:21:02 AM DESIGN FILE: F:\AECDESIGNS\HHAW\Civil\HHAWC-111C05.DGN

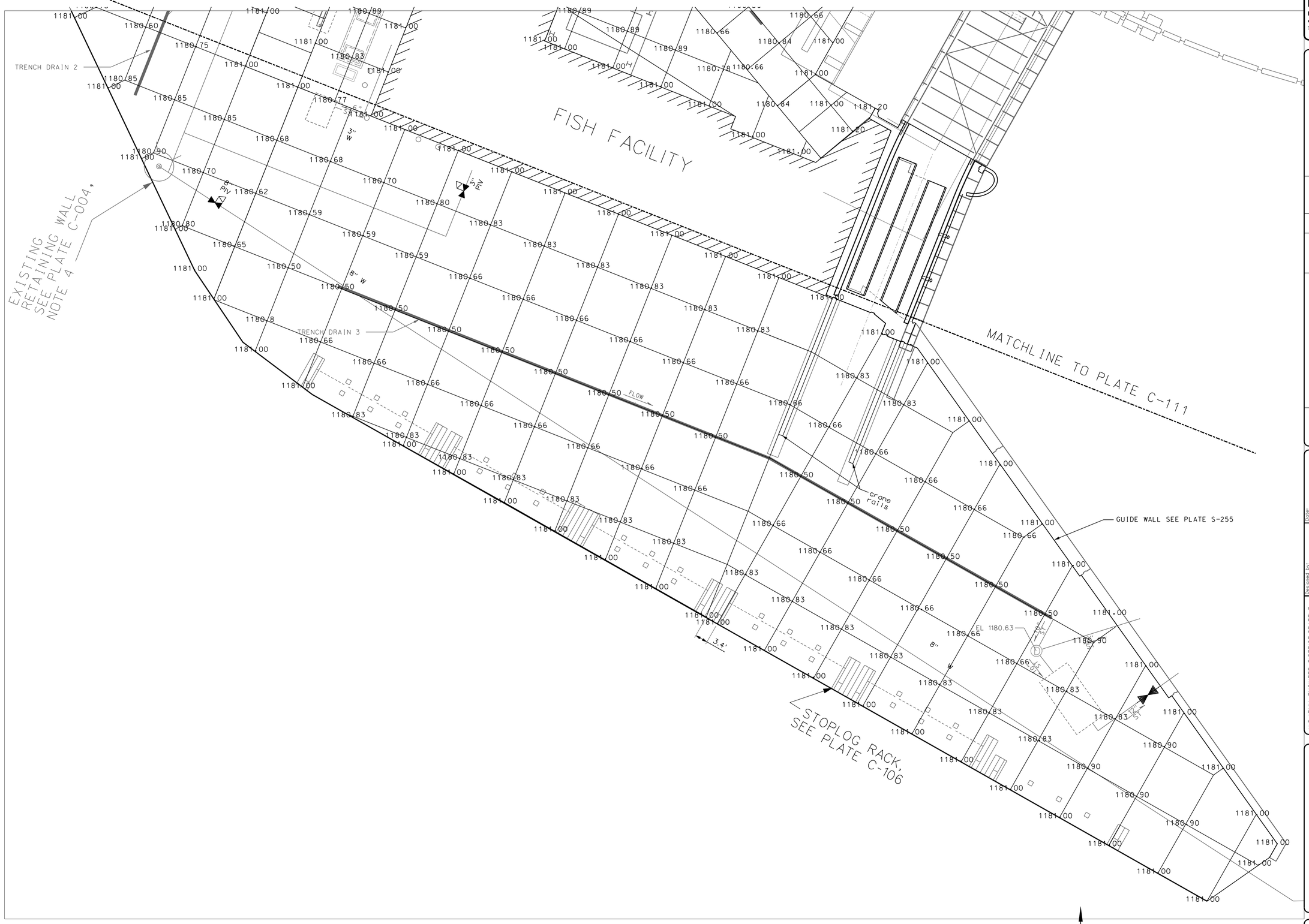

US Army Corps of Engineers
Seattle District

Symbol	Description	Appr.	Date
			/ /

Designed by: LAZO
Drawn by: LEJON
Checked by: FISCHER
Date: OCT 2009
File: E-56-14-19
Rev.

U.S.ARMY ENGINEER DISTRICT SEATTLE
CORPS OF ENGINEERS
SEATTLE, WASHINGTON
Prepared by:

ADDITIONAL WATER STORAGE PROJECT
HOWARD HANSON DAM
CONCRETE JOINT GRADING PLAN 2
GREEN RIVER WASHINGTON

Plate number:
C-112
Sheet of

DATE AND TIME PLOTTED: 1/20/10 11:21:20 AM DESIGN FILE: I:\AECDESIGNS\HHAW\Civil\HHAWC-112C06.DGN

TABLE 1			
PAVEMENT THICKNESS INCHES h_d	MINIMUM DOWEL LENGTH (INCHES)	MAXIMUM DOWEL SPACING (INCHES)	DOWEL DIAMETER (d) AND TYPE
8	16	12	3/4 INCH BAR

NOTES:

1. NONABSORPTIVE "SEPARATING TAPE" REQUIRED TO PREVENT JOINT SEALANT FROM FLOWING INTO THE SAWCUT, TO BREAK BOND AT THE BOTTOM OF SEALANT AND TO SEPARATE NONCOMPATIBLE MATERIALS.

2. JOINT DETAILS SHOWN REPRESENT CONTRACTION JOINT REQUIREMENTS. CONSTRUCTION JOINTS ARE SIMILAR EXCEPT NO INITIAL SAWCUT IS REQUIRED.

3. THE DEPTH OF INITIAL SAWCUT "T" IS EQUAL TO 1/4 PAVEMENT THICKNESS AND NOT LESS THAN 2 INCHES.

4. D= DEPTH OF SEALANT, 1 1/2 TIMES THE WIDTH OF SEALANT BUT NOT LESS THAN 3/4 INCH.

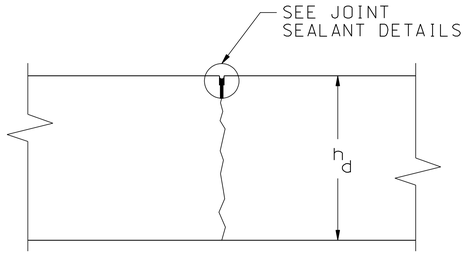

SAWED CONSTRUCTION JOINT

NO SCALE

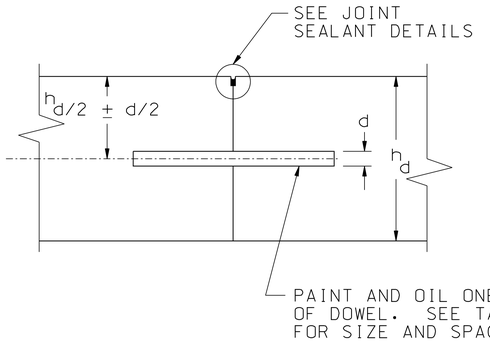

DOWELED CONSTRUCTION JOINT

NO SCALE

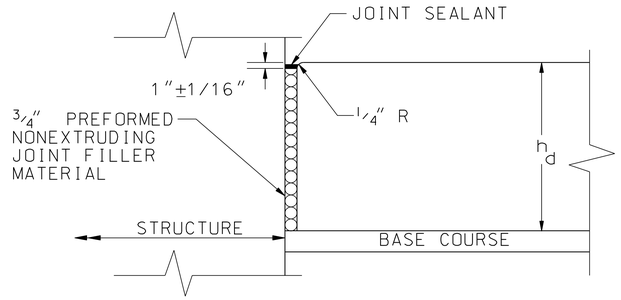

EXPANSION JOINT AT STRUCTURE

NO SCALE

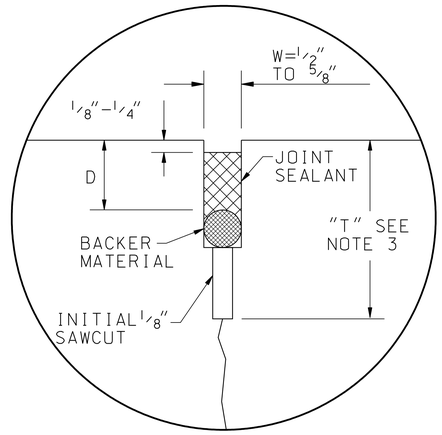

SAWED JOINT-POURED SEALANT WITH BACKER MATERIAL

NO SCALE

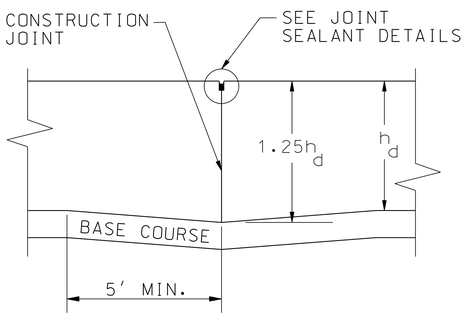

THICKENED-EDGE JOINT

NO SCALE

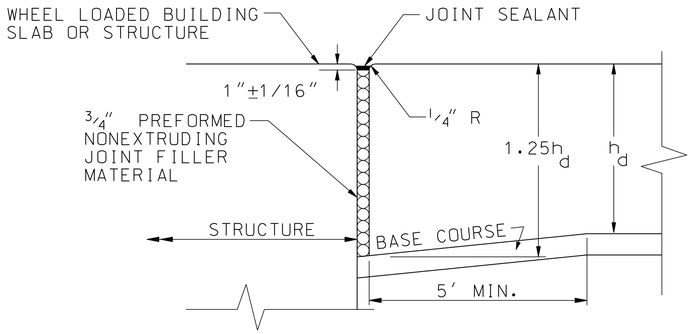

THICKENED EDGE TYPE EXPANSION JOINT AT STRUCTURE

NO SCALE

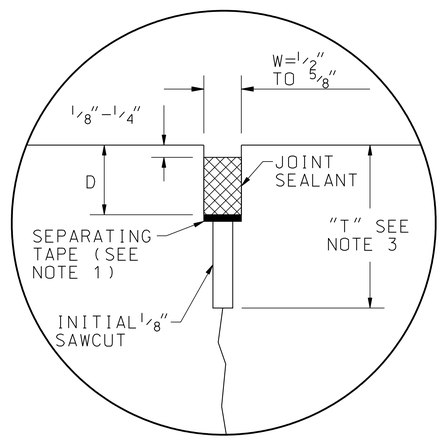

SAWED JOINT-POURED SEALANT WITH SEPARATING TAPE

NO SCALE

US Army Corps of Engineers
Seattle District

Symbol	Description	Date	Appr.	Symbol	Description
		/ /			

Designed by: LAZO
Drawn by: LEJON
Checked by: FISCHER
Date: OCT 2009
File: E-56-14-19
Rev.

U.S.ARMY ENGINEER DISTRICT,SEATTLE
CORPS OF ENGINEERS
SEATTLE, WASHINGTON
Prepared by:

ADDITIONAL WATER STORAGE PROJECT
HOWARD HANSON DAM
CONCRETE JOINT
LEGEND AND DETAILS
GREEN RIVER WASHINGTON

Plate number: C-113
Sheet of

DATE AND TIME PLOTTED: 1/20/10 11:21:26 AM DESIGN FILE: I:\AECDESIGNS\HHAW\Civil\HHAWC-113C007.DGN

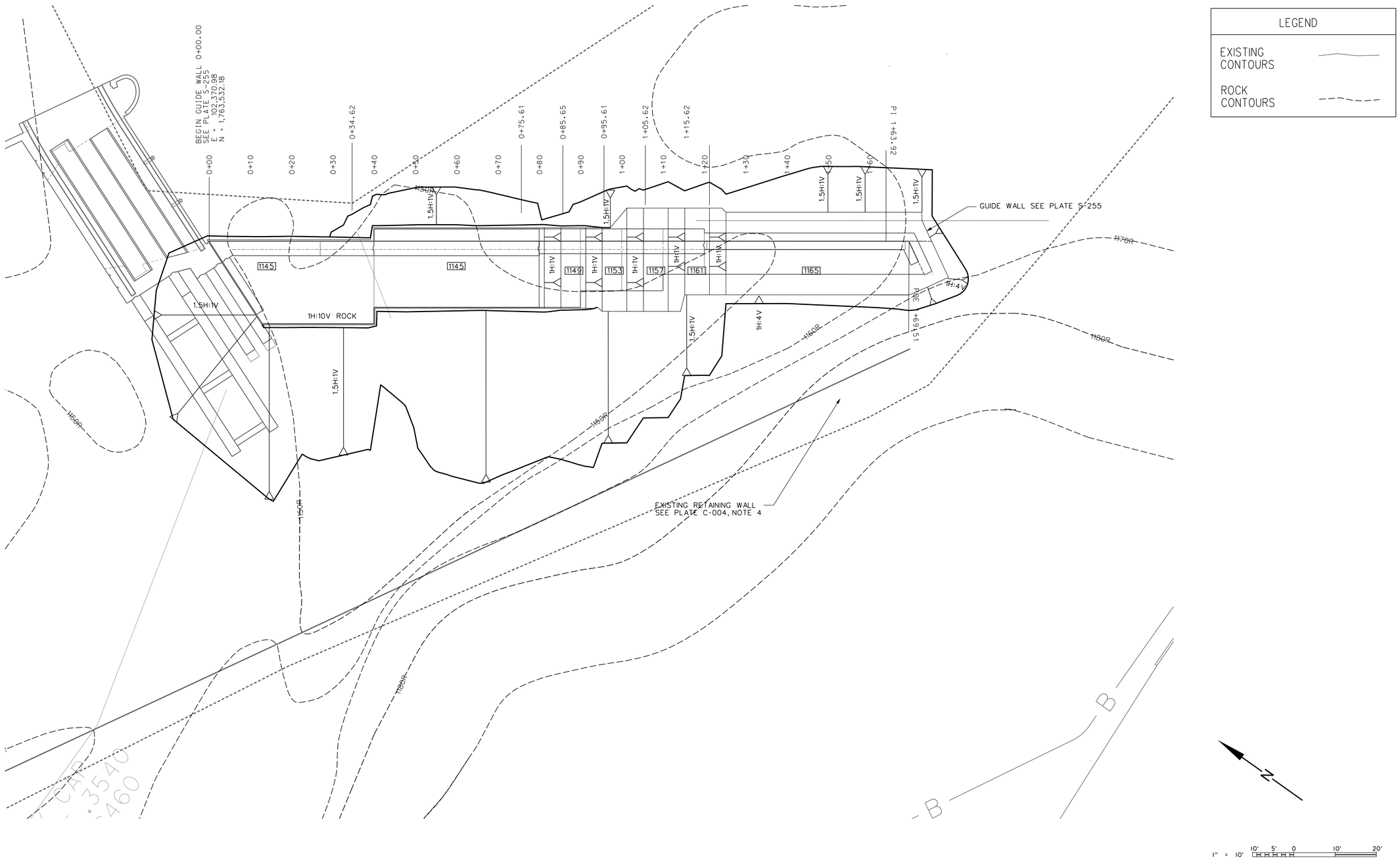

LEGEND

EXISTING CONTOURS	
ROCK CONTOURS	

US Army Corps of Engineers
Seattle District

Symbol	Description	Date	Appr.	Symbol	Description
		/ /			

Designed by: KATO
Drawn by: KATO
Checked by: FISCHER
Date: OCT 2009
File: E-56-14-19
Rev.

U.S.ARMY ENGINEER DISTRICT,SEATTLE
CORPS OF ENGINEERS
SEATTLE, WASHINGTON
Prepared by:

ADDITIONAL WATER STORAGE PROJECT
HOWARD HANSON DAM
GUIDE WALL
EXCAVATION PLAN
GREEN RIVER WASHINGTON

Plate number:
C-114
Sheet of

DATE AND TIME PLOTTED: 1/20/10 11:21:40 AM DESIGN FILE: I:\AECDESIGNS\HHAW\Civil\HHAWC-114C08.DGN

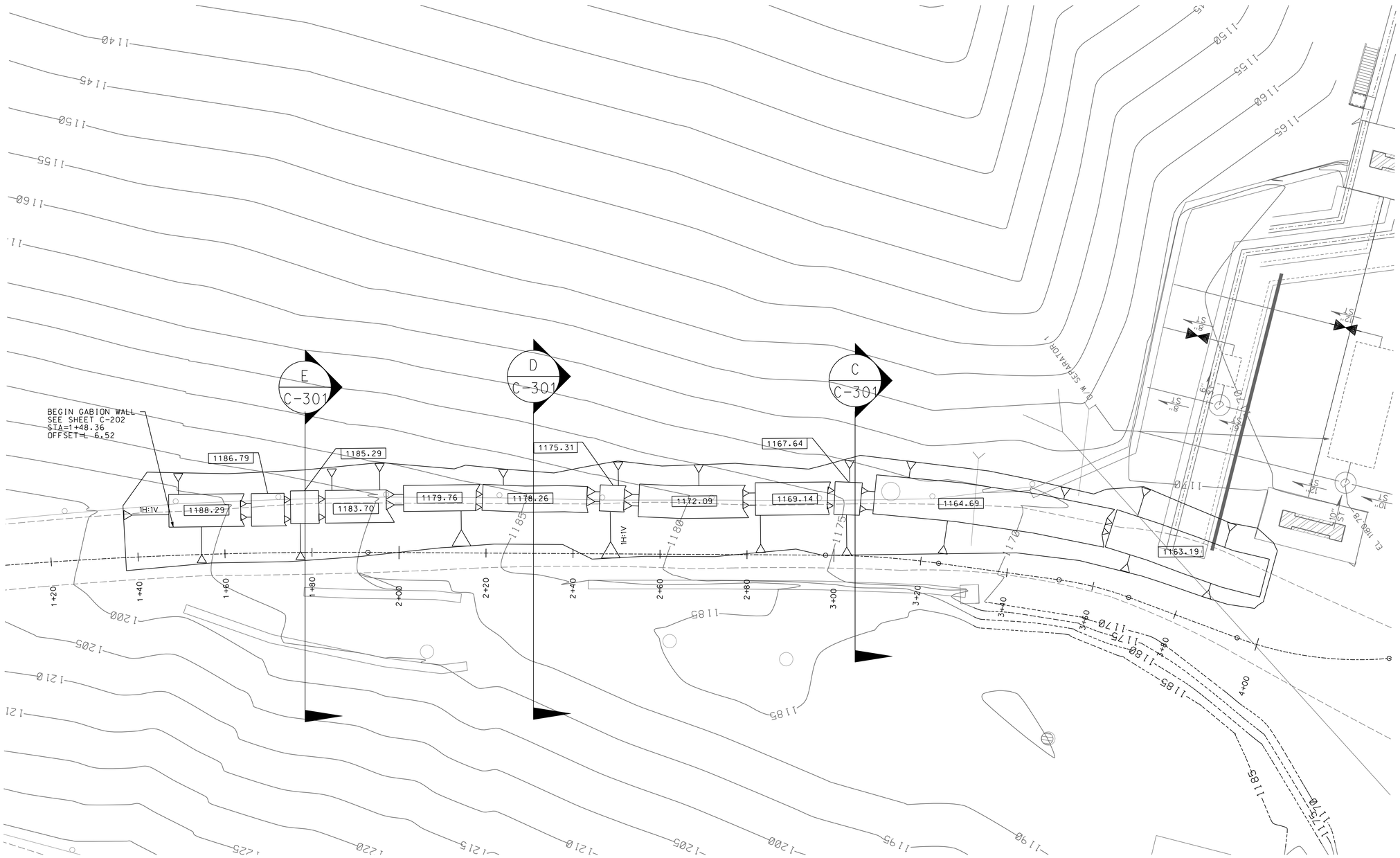

LEGEND

EXISTING CONTOURS

EXPOSED ROCK CONTOURS

N

1" = 10' 10' 5' 0 10' 20'

US Army Corps of Engineers
Seattle District

Symbol	Description	Date	Appr.	Symbol	Description
		/ /			

U.S.ARMY ENGINEER DISTRICT,SEATTLE
CORPS OF ENGINEERS
SEATTLE, WASHINGTON

Prepared by:

Designed by: KATO
Drawn by: KATO
Checked by: FISCHER

Date: OCT 2009
File: E-56-14-19
Rev.

ADDITIONAL WATER STORAGE PROJECT
HOWARD HANSON DAM

ACCESS ROAD 1 GABION WAL EXCAVATION PLAN

GREEN RIVER WASHINGTON

Plate number:
C-115
Sheet of

DATE AND TIME PLOTTED: 1/20/10 11:21:53 AM DESIGN FILE: I:\AECDESIGNS\HHAW\Civil\HHAWC-115C09.DGN

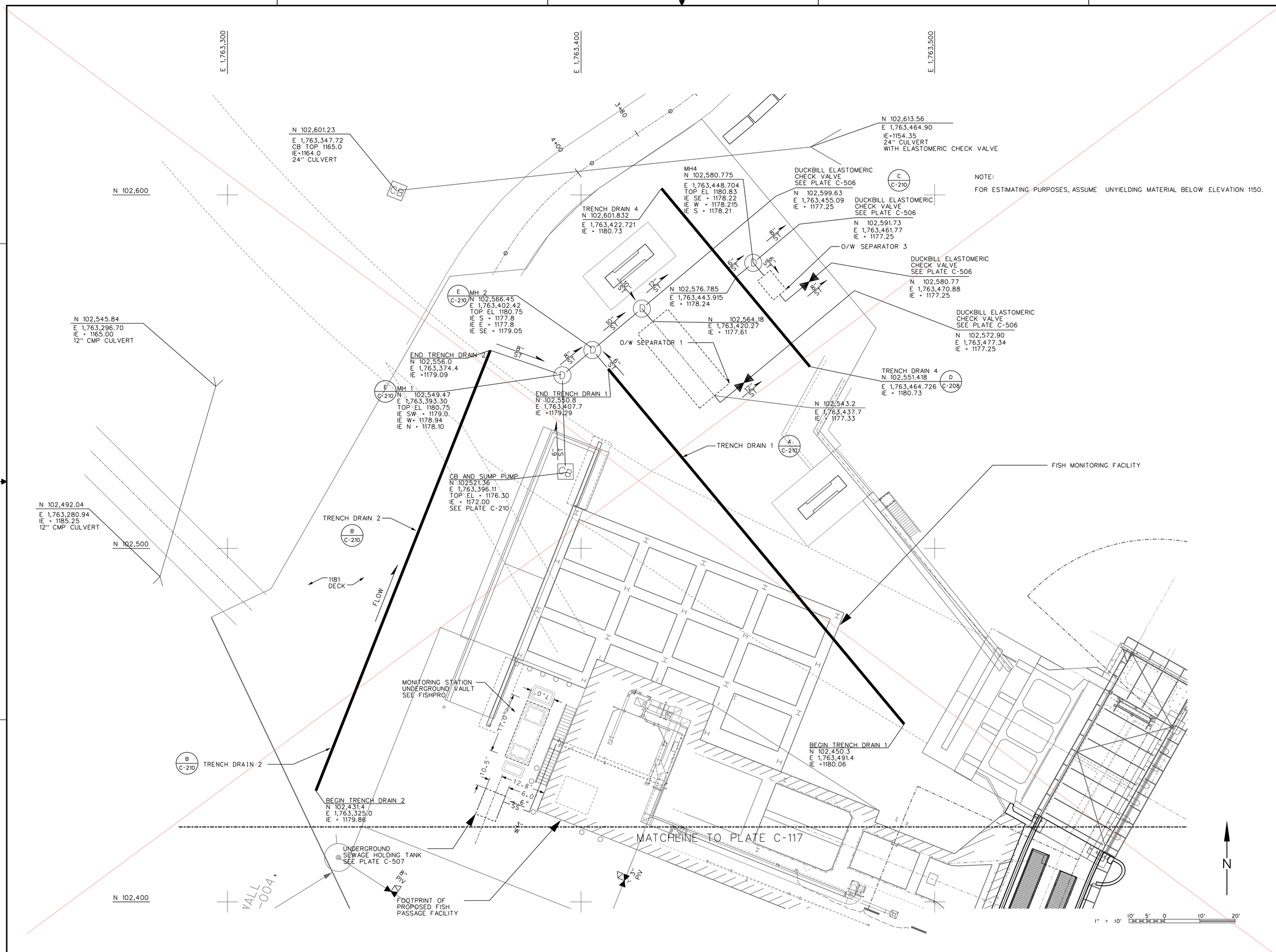

US Army Corps of Engineers
Seattle District

Symbol	Description	Date	Appr.	Symbol	Description
		/ /			

Designed by: KATO
Date: OCT 2009
Drawn by: KATO
File: E-56-14-19
Checked by: FISCHER
Rev.

U.S. ARMY ENGINEER DISTRICT, SEATTLE
CORPS OF ENGINEERS
SEATTLE, WASHINGTON

Prepared by:

ADDITIONAL WATER STORAGE PROJECT
HOWARD HANSON DAM

UTILITY PLAN 1

GREEN RIVER WASHINGTON

Plate number:
C-116
Sheet of

DATE AND TIME PLOTTED: 1/20/10 11:22:10 AM DESIGN FILE: J:\AECDESIGNS\HHAW\Civil\HHAWC-116U01.DGN

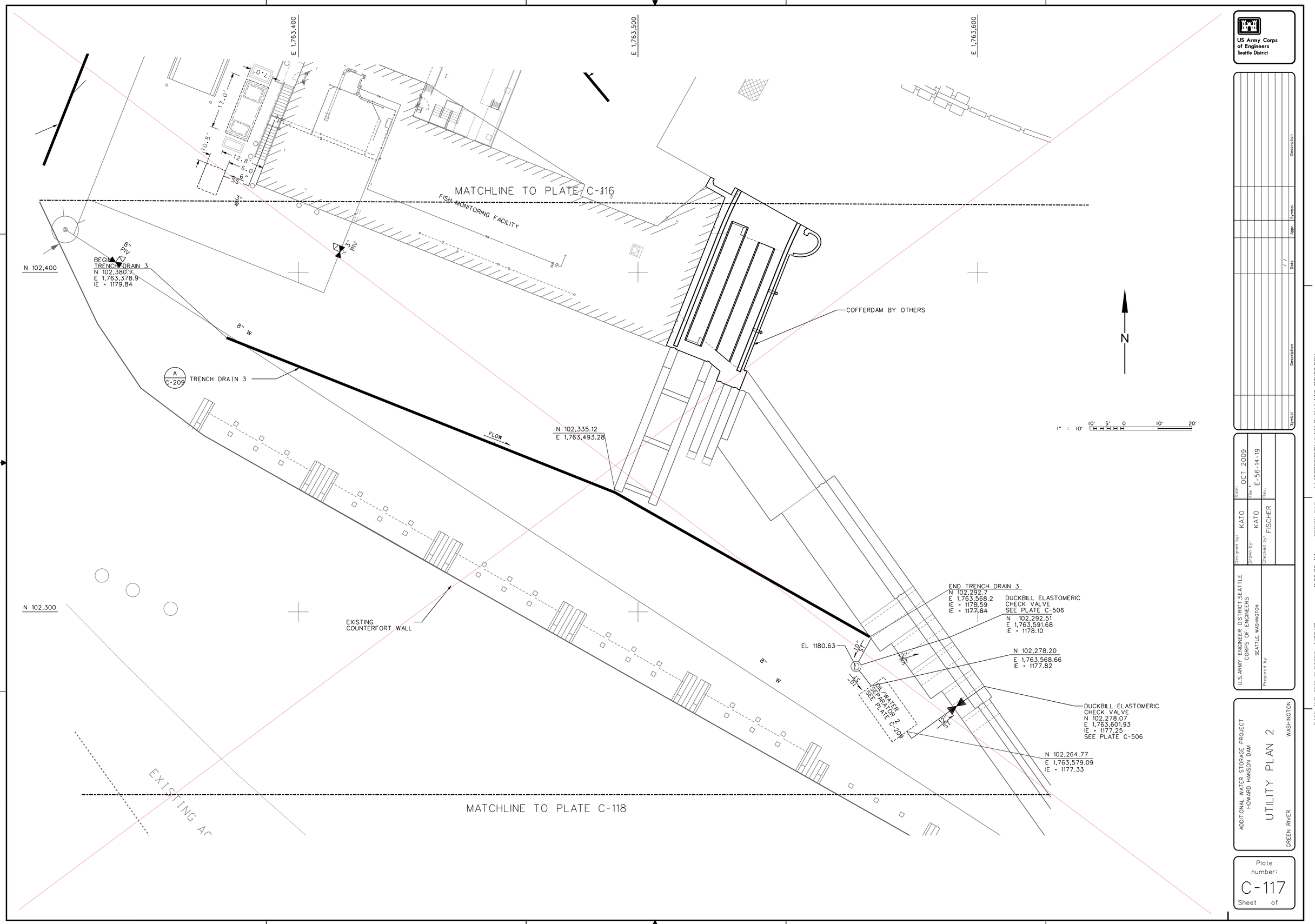
E 1,763,400
E 1,763,500
E 1,763,600
N 102,400
N 102,300
MATCHLINE TO PLATE C-116
FISH MONITORING FACILITY
BEGIN TRENCH DRAIN 3
N 102,380.7
E 1,763,378.9
IE = 1179.84
8" W
A
C-209
TRENCH DRAIN 3
FLOW
N 102,335.12
E 1,763,493.28
COFFERDAM BY OTHERS
N
1" = 10'
10' 5' 0 10' 20'
END TRENCH DRAIN 3
N 102,292.7
E 1,763,568.2
IE = 1178.59
IE = 1177.84
DUCKBILL ELASTOMERIC
CHECK VALVE
SEE PLATE C-506
N 102,292.51
E 1,763,591.68
IE = 1178.10
N 102,278.20
E 1,763,568.66
IE = 1177.82
EL 1180.63
OIL WATER SEPARATOR 2
SEE PLATE C-208
DUCKBILL ELASTOMERIC
CHECK VALVE
N 102,278.07
E 1,763,601.93
IE = 1177.25
SEE PLATE C-506
N 102,264.77
E 1,763,579.09
IE = 1177.33
EXISTING
COUNTERFORT WALL
MATCHLINE TO PLATE C-118
US Army Corps
of Engineers
Seattle District
Symbol
Description
Date
Appr.
Designed by: KATO
Drawn by: KATO
Checked by: FISCHER
Date: OCT 2009
File: E-56-14-19
Rev.
U.S.ARMY ENGINEER DISTRICT,SEATTLE
CORPS OF ENGINEERS
SEATTLE, WASHINGTON
Prepared by:
ADDITIONAL WATER STORAGE PROJECT
HOWARD HANSON DAM
UTILITY PLAN 2
GREEN RIVER
WASHINGTON
Plate number:
C-117
Sheet of
DATE AND TIME PLOTTED: 1/20/10
11:22:29 AM
DESIGN FILE: I:\AEDESIGNS\HHAW\Civil\HHAWC-117U02.DGN

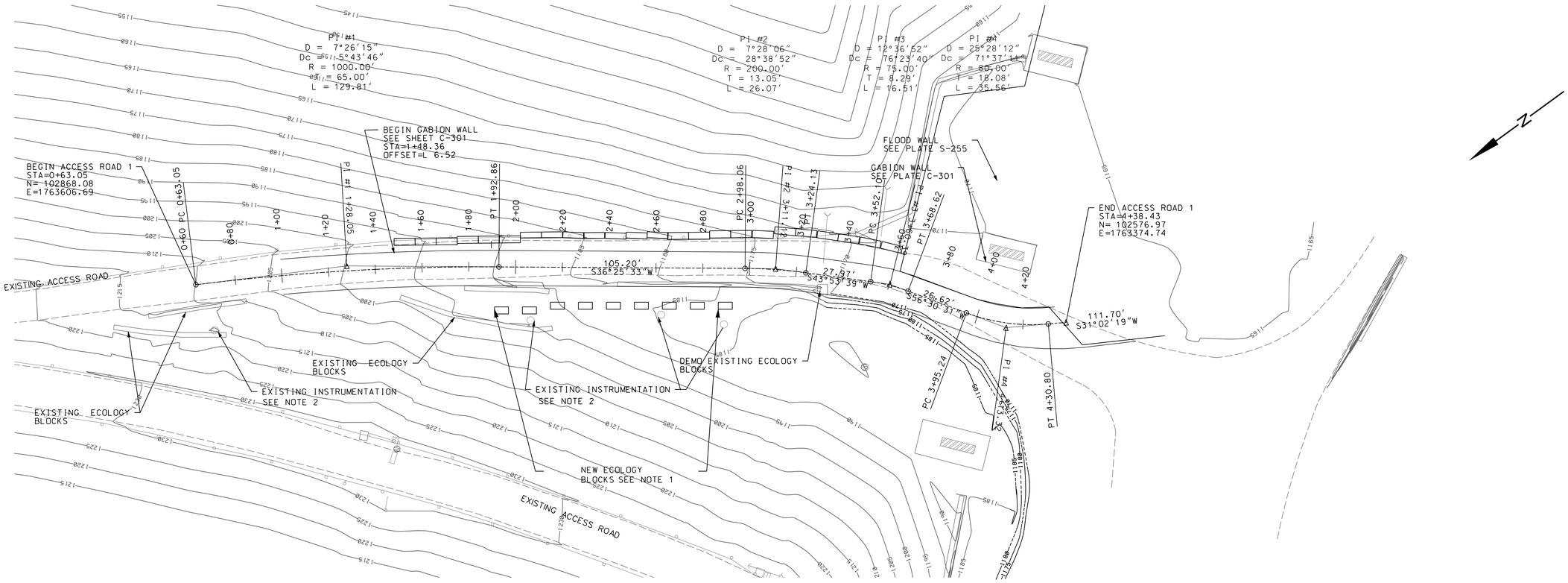

ACCESS ROAD 1 PLAN

1" = 20' (20' 10' 0 20' 40')

LEGEND	
EXISTING CONTOURS	———
EXPOSED ROCK CONTOURS	— — —

NOTES:

1. 9 ECOLOGY BLOCKS STARTING AT APPROXIMATE STATION 1+90. 6 FEET APART. POSITIONED 6" FROM DITCH TOP.
2. CONTRACTOR SHALL PROTECT EXISTING INSTRUMENTATION .

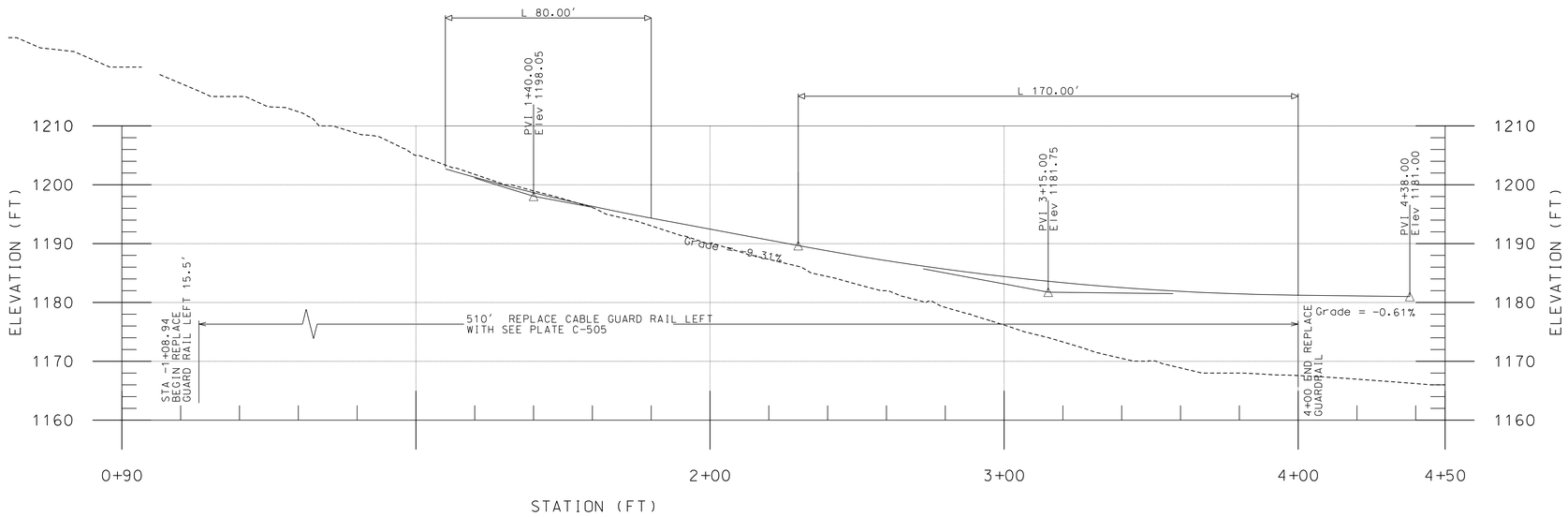

ACCESS ROAD 1 PROFILE

HORIZONTAL SCALE:

1" = 20' (20' 10' 0 20' 40')

VERTICAL SCALE:

1" = 10' (10' 5' 0 10' 20')

LEGEND:

——— PROPOSED ROAD SURFACE ALONG ℄ OF ROAD.

- - - - EXISTING GROUND SURFACE ALONG ℄ OF ROAD.

US Army Corps of Engineers
Seattle District

Symbol	Description	Appr.	Date
			/ /

Designed by: KATO
Drawn by: KATO
Checked by: FISCHER
Date: OCT 2009
File: E-56-14-19
Rev.

U.S.ARMY ENGINEER DISTRICT,SEATTLE
CORPS OF ENGINEERS
SEATTLE, WASHINGTON
Prepared by:

ADDITIONAL WATER STORAGE PROJECT
HOWARD HANSON DAM
ACCESS ROAD 1
PLAN AND PROFILE
GREEN RIVER WASHINGTON

Plate number:
C-201
Sheet of

DATE AND TIME PLOTTED: 1/20/10 11:22:36 AM DESIGN FILE: I:\AECDESIGNS\HHAW\Civil\HHAWC-201P01.DGN

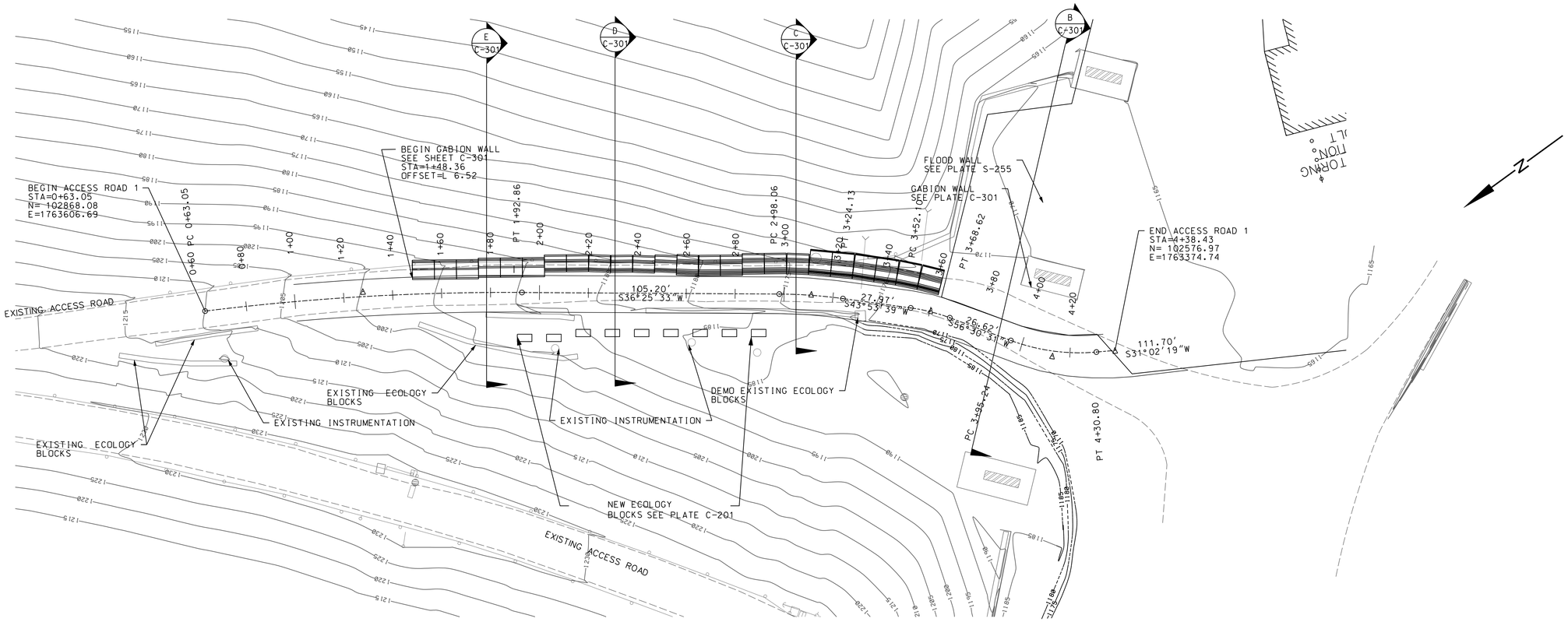

ACCESS ROAD 1 GABION WALL PLAN

1" = 20' 20' 10' 0 20' 40'

LEGEND	
EXISTING CONTOURS	———
EXPOSED ROCK CONTOURS	— — —

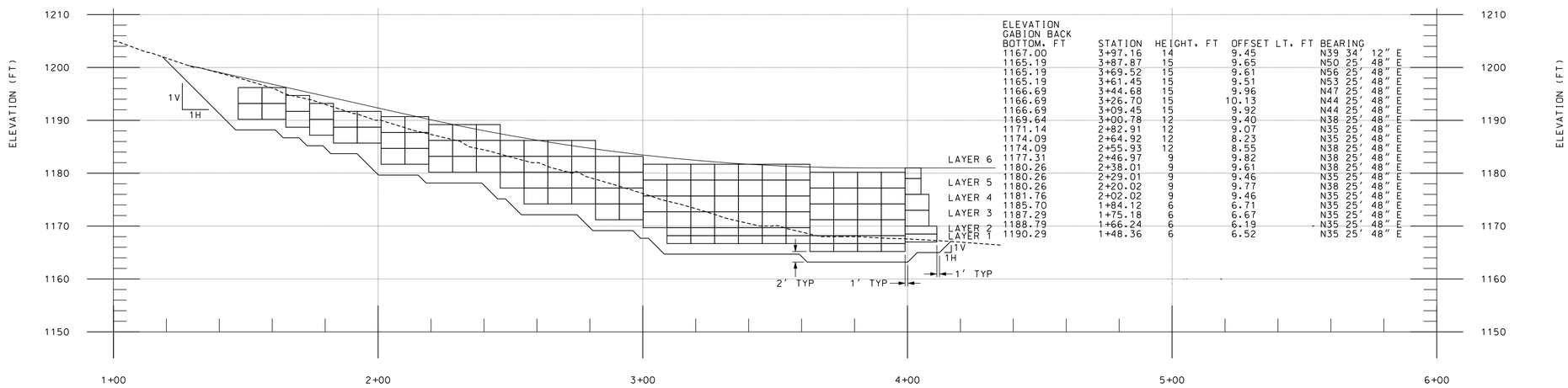

ELEVATION GABION BACK BOTTOM, FT	STATION	HEIGHT, FT	OFFSET LT, FT	BEARING
1167.00	3+97.16	14	9.45	N39 34' 12" E
1165.19	3+87.87	15	9.65	N50 25' 48" E
1165.19	3+69.52	15	9.61	N56 25' 48" E
1165.19	3+61.45	15	9.51	N53 25' 48" E
1166.69	3+44.68	15	9.96	N47 25' 48" E
1166.69	3+26.70	15	10.13	N44 25' 48" E
1166.69	3+09.45	15	9.92	N44 25' 48" E
1169.64	3+00.78	12	9.40	N38 25' 48" E
1171.14	2+82.91	12	9.07	N35 25' 48" E
1174.09	2+64.92	12	8.23	N35 25' 48" E
1174.09	2+55.93	12	8.55	N38 25' 48" E
1177.31	2+46.97	9	9.82	N38 25' 48" E
1180.26	2+38.01	9	9.61	N38 25' 48" E
1180.26	2+29.01	9	9.46	N35 25' 48" E
1180.26	2+20.02	9	9.77	N38 25' 48" E
1181.76	2+02.02	9	9.46	N35 25' 48" E
1185.70	1+84.12	6	6.71	N35 25' 48" E
1187.29	1+75.18	6	6.67	N35 25' 48" E
1188.79	1+66.24	6	6.19	N35 25' 48" E
1190.29	1+48.36	6	6.52	N35 25' 48" E

ACCESS ROAD 1 GABION WALL PROFILE

HORIZONTAL SCALE:
1" = 20' 20' 10' 0 20' 40'

VERTICAL SCALE:
1" = 10' 10' 5' 0 10' 20'

LEGEND:

——— PROPOSED ROAD SURFACE ALONG ℄ OF ROAD.

- - - - EXISTING GROUND SURFACE ALONG ℄ OF ROAD.

US Army Corps of Engineers
Seattle District

Symbol	Description	Appr.	Date
			/ /

Designed by: KATO
Drawn by: KATO
Checked by: FISCHER
Date: OCT 2009
File: E-56-14-19
Rev.

U.S.ARMY ENGINEER DISTRICT,SEATTLE
CORPS OF ENGINEERS
SEATTLE, WASHINGTON
Prepared by:

ADDITIONAL WATER STORAGE PROJECT
HOWARD HANSON DAM
ACCESS ROAD 1
GABION WALL
PLAN AND PROFILE
GREEN RIVER WASHINGTON

Plate number:
C-202
Sheet of

DATE AND TIME PLOTTED: 1/20/10 11:22:43 AM DESIGN FILE: J:\AECDESIGNS\HHAW\Civil\HHAWC-202P02.DGN

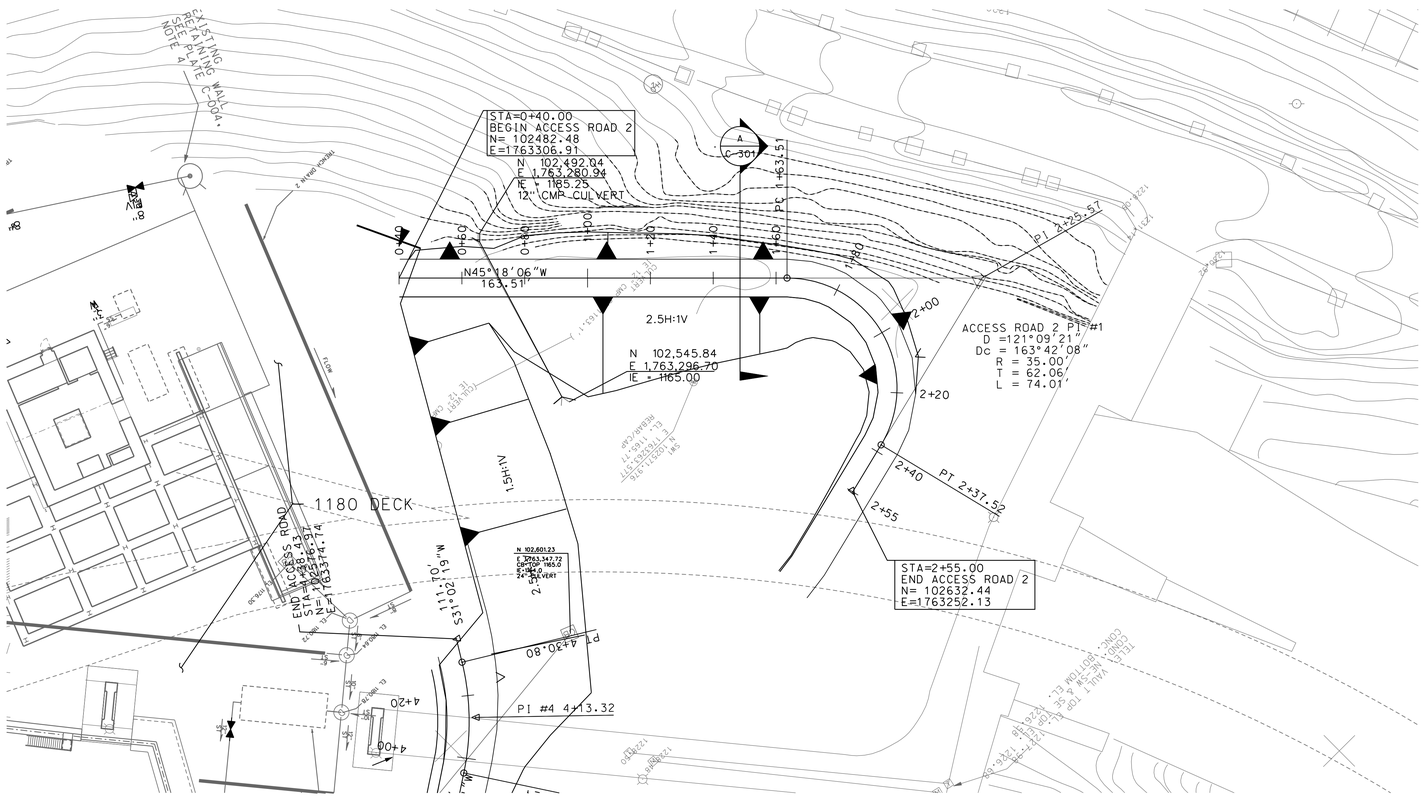

ACCESS ROAD 2 PLAN

1" = 20' (20' 10' 0 20' 40')

LEGEND	
EXISTING CONTOURS	
EXPOSED ROCK CONTOURS	

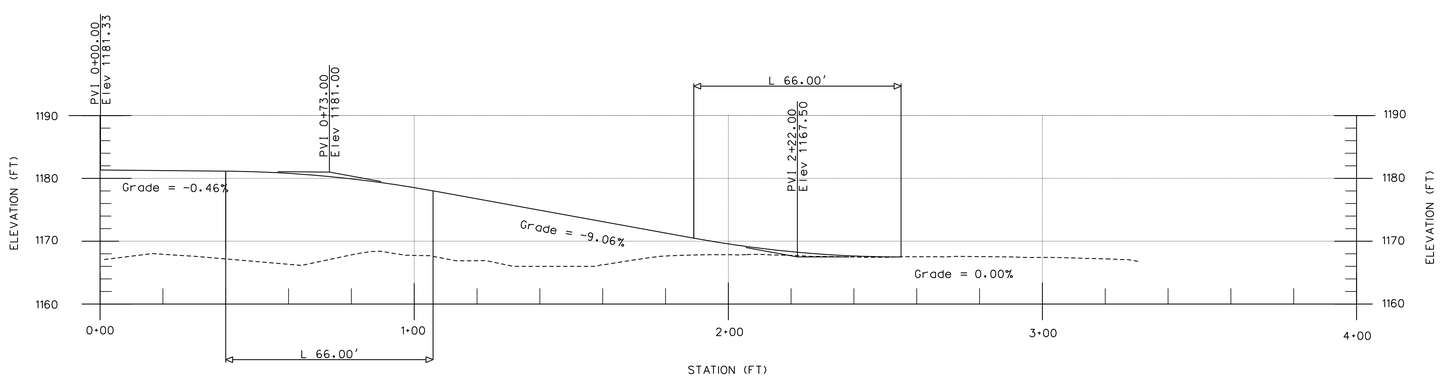

ACCESS ROAD 2 PROFILE

HORIZONTAL SCALE: 1" = 20' (20' 10' 0 20' 40')

VERTICAL SCALE: 1" = 10' (10' 5' 0 10' 20')

LEGEND:

PROPOSED ROAD SURFACE ALONG ℄ OF ROAD.

EXISTING GROUND SURFACE ALONG ℄ OF ROAD.

US Army Corps of Engineers
Seattle District

Symbol	Description	Date	Appr.	Symbol	Description
		/ /			

Designed by: KATO
Drawn by: LEJON
Checked by: FISCHER
Date: OCT 2009
File: E-56-14-19
Rev.

U.S.ARMY ENGINEER DISTRICT,SEATTLE
CORPS OF ENGINEERS
SEATTLE, WASHINGTON
Prepared by:

ADDITIONAL WATER STORAGE PROJECT
HOWARD HANSON DAM
ACCESS ROAD 2
PLAN AND PROFILE
GREEN RIVER WASHINGTON

Plate number:
C-203
Sheet of

DATE AND TIME PLOTTED: 1/20/10 11:23:00 AM DESIGN FILE: I:\AECDESIGNS\HHAW\Civil\HHAWC-203P03.DGN

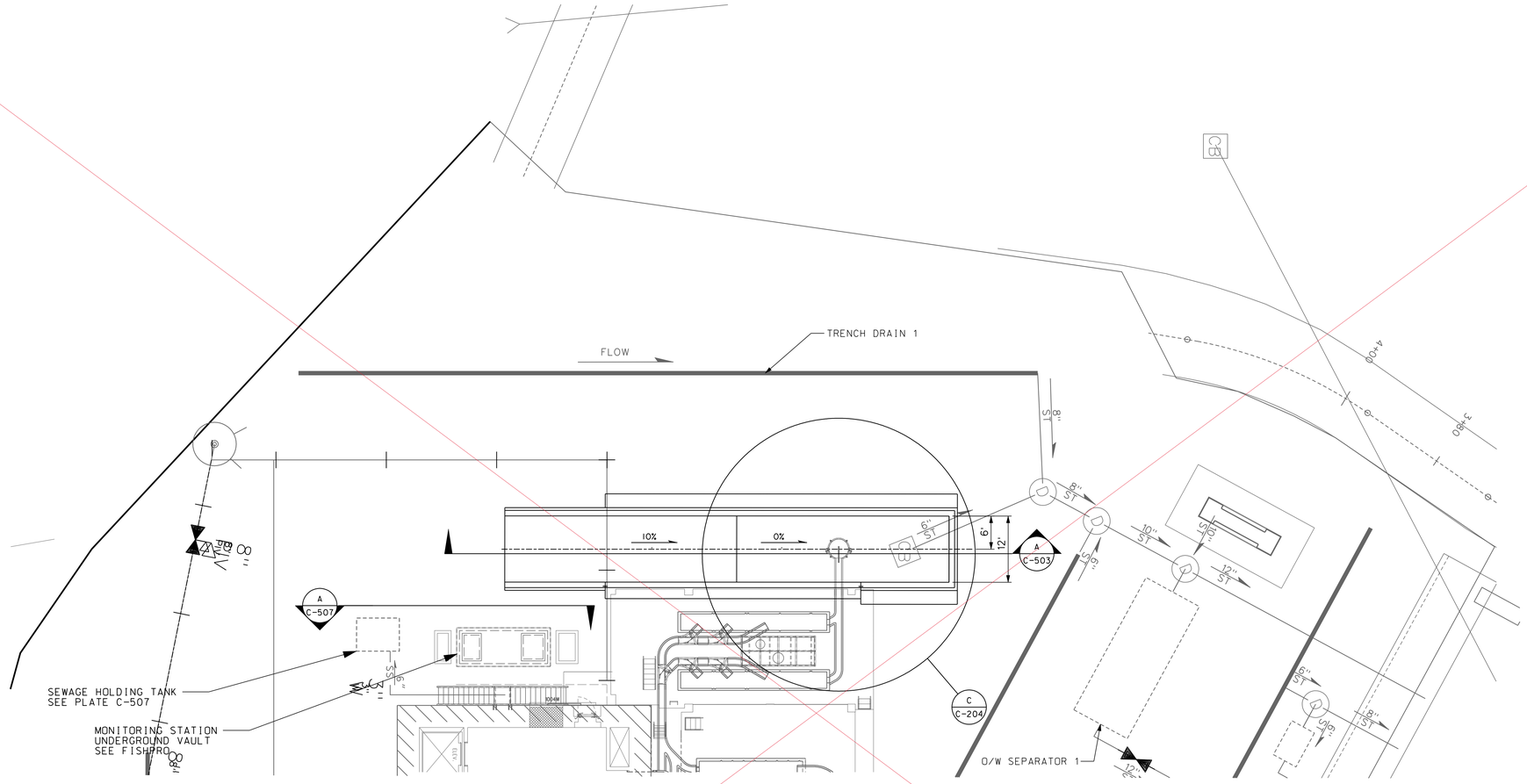

FISH TRUCK RAMP PLAN

1" = 10' 10' 5' 0 10' 20'

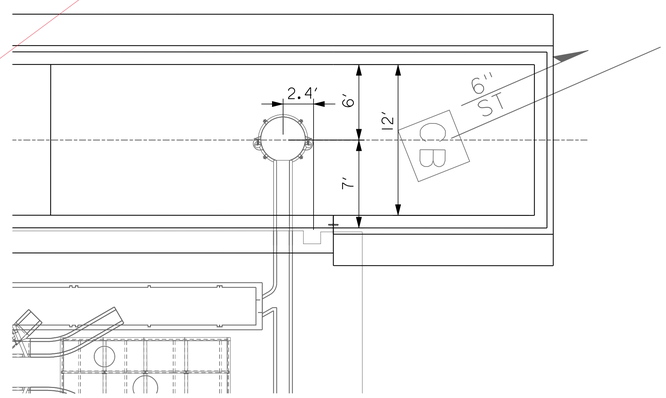

FISH TRUCK RAMP ENLARGED PLAN

C
C-204

1" = 5' 5' 0 5' 10'

US Army Corps of Engineers
Seattle District

Symbol	Description	Date	Appr.	Symbol	Description
		/ /			

Designed by: KATO
Drawn by: KATO
Checked by: FIS&HER
Date: OCT 2009
File #: E-56-14-19
Rev.

U.S.ARMY ENGINEER DISTRICT,SEATTLE
CORPS OF ENGINEERS
SEATTLE, WASHINGTON
Prepared by:

ADDITIONAL WATER STORAGE PROJECT
HOWARD HANSON DAM
FISH TRUCK RAMP PLAN
GREEN RIVER WASHINGTON

Plate number:
C-204
Sheet of

DATE AND TIME PLOTTED: 1/20/10 11:23:08 AM DESIGN FILE: I:\AEDESIGNS\HHAW\Civil\HHAWC-204P04.DGN

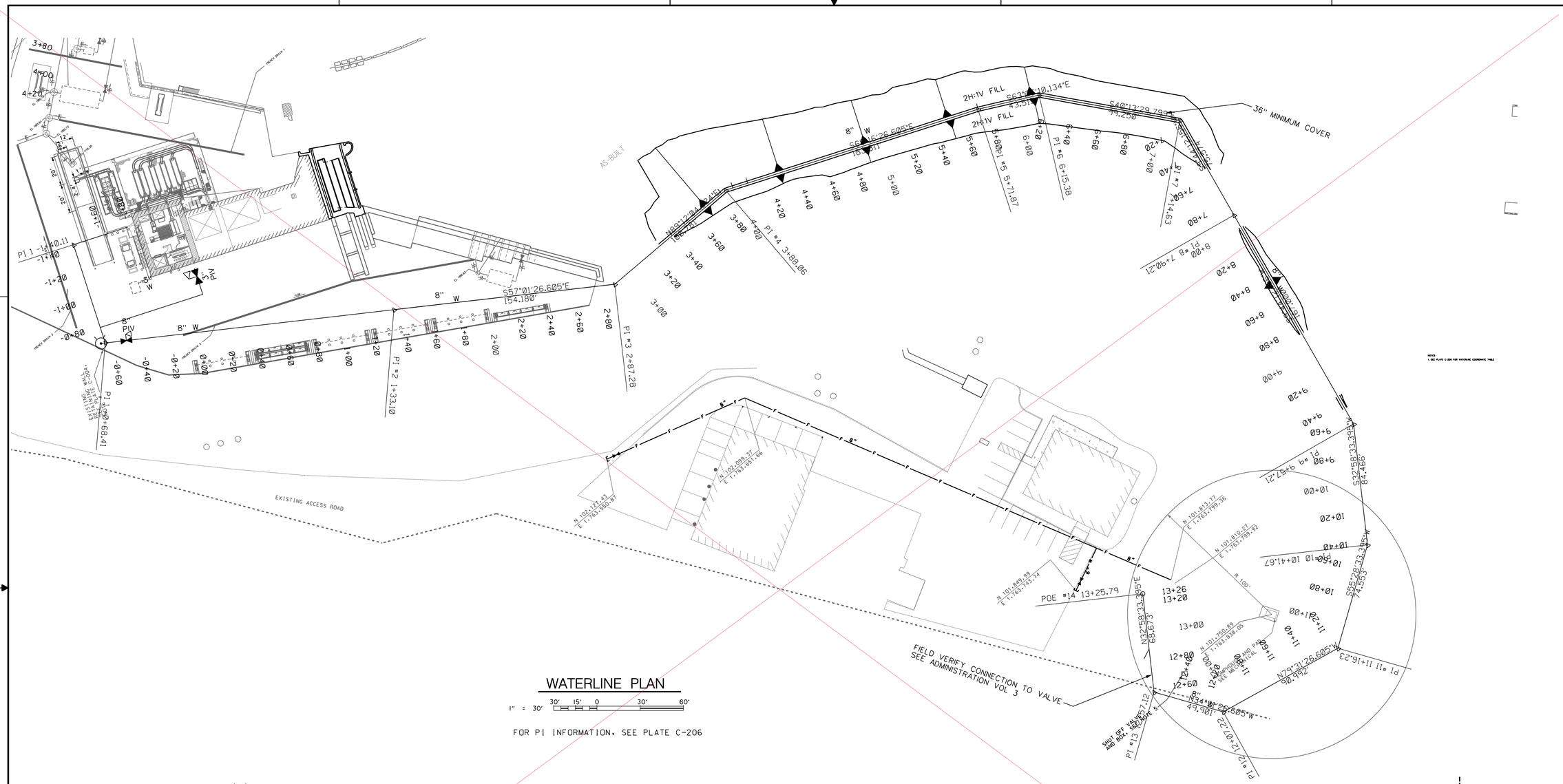

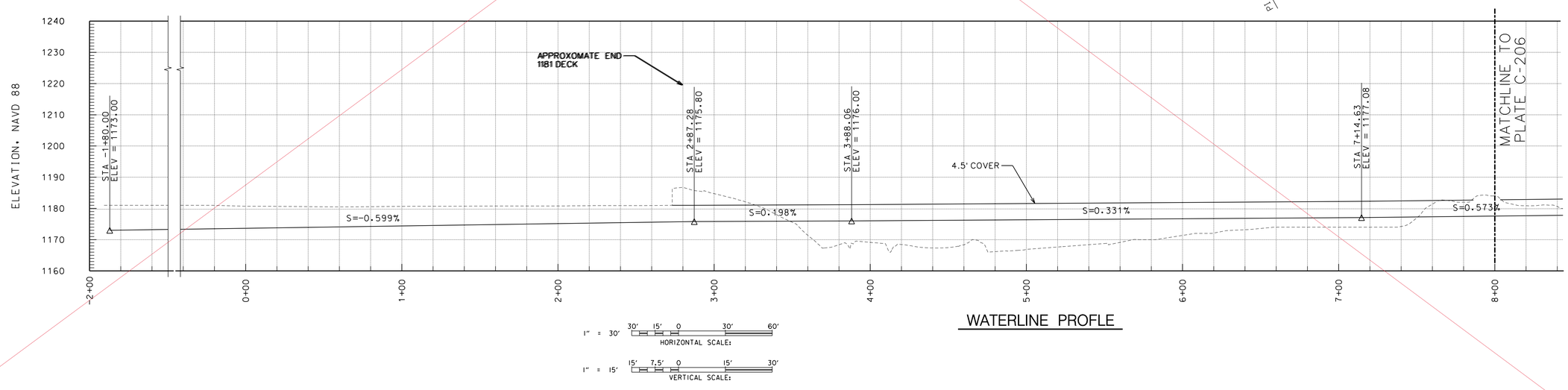

WATERLINE PROFLE

US Army Corps of Engineers
Seattle District

Symbol	Description	Date	Appr.	Symbol	Description
		/ /			

Designed by:
Drawn by:
Checked by: X
Prepared by:

Date: OCT 2009
File: E-56-14-19
Rev.

U.S.ARMY ENGINEER DISTRICT,SEATTLE
CORPS OF ENGINEERS
SEATTLE, WASHINGTON

ADDITIONAL WATER STORAGE PROJECT
HOWARD HANSON DAM
tWATER LINE
PLAN AND PROFILE 1
GREEN RIVER WASHINGTON

Plate number:
C-205
Sheet of

DATE AND TIME PLOTTED: 1/20/10 11:23:36 AM DESIGN FILE: I:\AECDESIGNS\HHAW\Civil\HHAWC-205P05.DGN

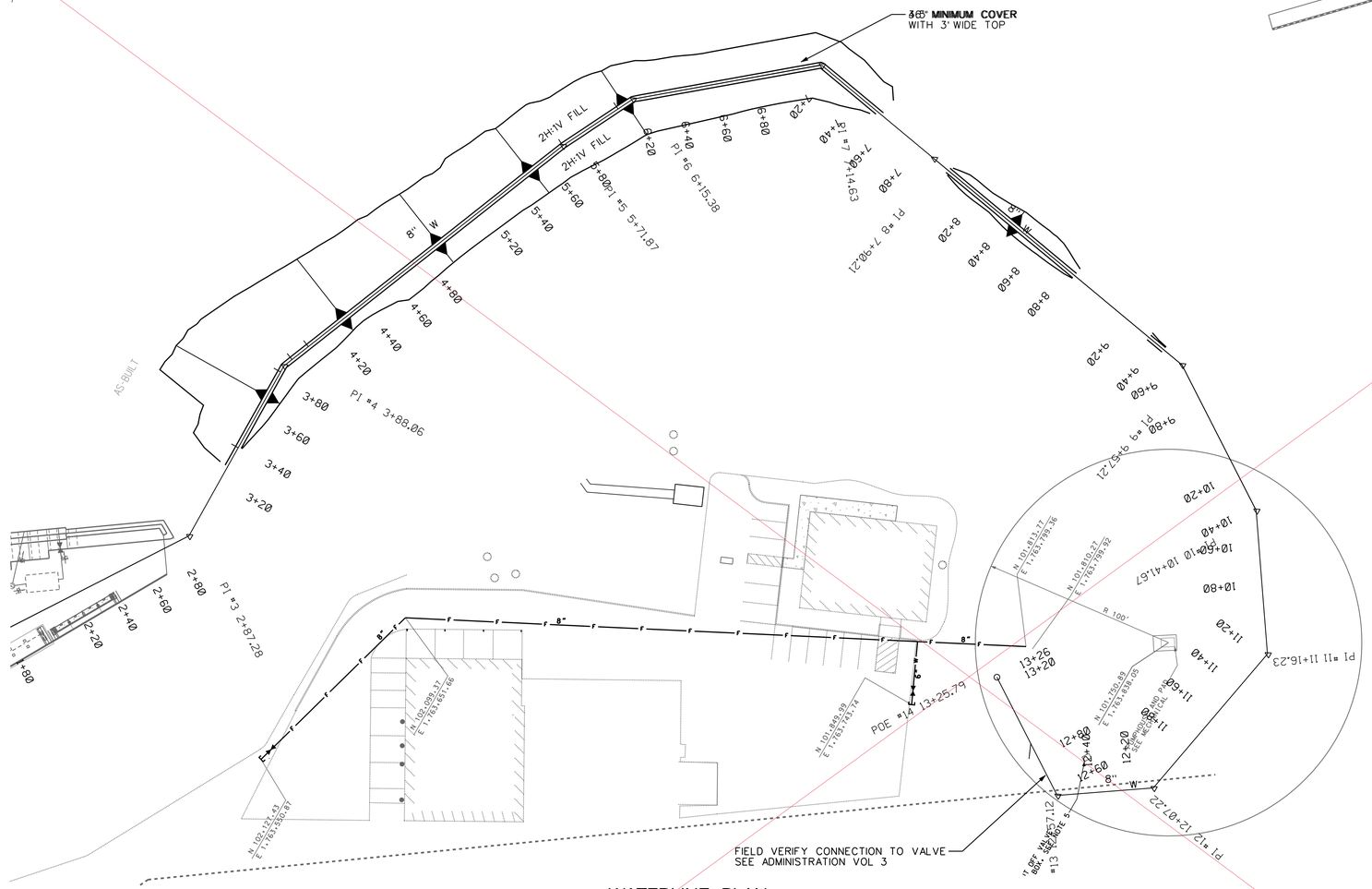

WATERLINE PLAN

1" = 30' 30' 15' 0 30' 60'

WATERLINE COORDINATE TABLE

PI	STATION	NORTHING	EASTING	BEARING	LENGTH
POB #0	-1+80.00	102463.090	1763396.970	N 68°23'43.265" E	39.890
PI #0A	-1+40.11	102477.630	1763360.240	S 21°36'16.735" E	71.699
PI #1	-0+68.41	102411.320	1763334.060	S 57°03'20.942" E	201.509
PI #2	1+33.099	102301.459	1763502.994	S 45°46'26.605" E	133.099
PI #3	2+87.278	102217.541	1763632.335	S 57°01'26.605" E	154.180
PI #4	3+88.059	102218.946	1763733.106	N 89°12'04.824" E	100.781
PI #5	5+71.870	102150.905	1763903.860	S 68°16'26.605" E	183.811
PI #6	6+15.385	102131.559	1763942.838	S 63°36'10.134" E	43.515
PI #7	7+14.635	102055.780	1764006.932	S 40°13'29.799" E	99.250
PI #8	7+90.209	101981.295	1763994.151	S 9°44'12.156" W	75.574
PI #9	9+57.209	101816.700	1763965.908	S 9°44'12.156" W	167.000
PI #10	10+41.675	101745.842	1763919.934	S 32°58'33.395" W	84.466
PI #11	11+16.227	101703.589	1763858.511	S 55°28'33.395" W	74.553
PI #12	12+07.219	101720.133	1763769.036	N 79°31'26.605" W	90.992
PI #13	12+57.121	101761.247	1763740.754	N 34°31'26.605" W	49.901
POE #14	13+25.794	101818.856	1763778.132	N 32°58'33.395" E	68.673

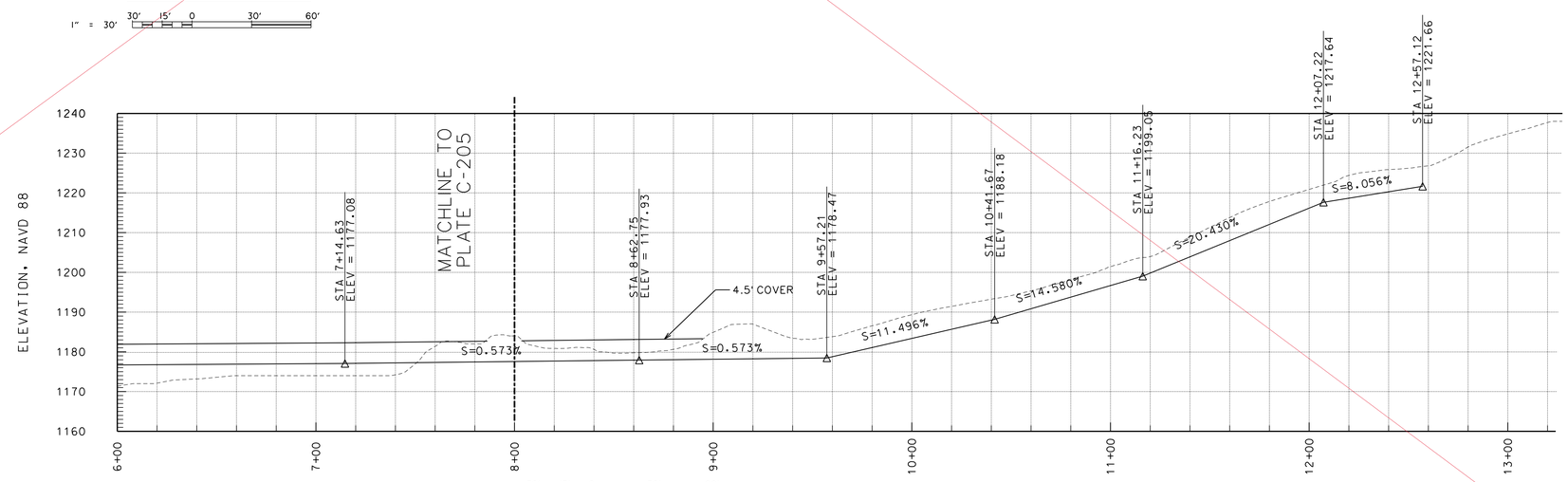

1" = 30' 30' 15' 0 30' 60'
HORIZONTAL SCALE:

1" = 15' 15' 7.5' 0 15' 30'
VERTICAL SCALE:

WATERLINE PROFLE

US Army Corps of Engineers
Seattle District

Symbol	Description	Date	Appr.	Symbol	Description
		/ /			

Designed by:
Drawn by:
Checked by: X
Prepared by:
Date: OCT 2009
File #: E-56-14-19
Rev.

U.S.ARMY ENGINEER DISTRICT,SEATTLE
CORPS OF ENGINEERS
SEATTLE, WASHINGTON

ADDITIONAL WATER STORAGE PROJECT
HOWARD HANSON DAM
WATER LINE
PLAN AND PROFILE 2
GREEN RIVER WASHINGTON

Plate number:
C-206
Sheet of

FILE: I:\AECDESIGNS\HHAW\Civil\HHAWC-206P06.DGN
DESIGN FILE:
DATE AND TIME PLOTTED: 1/20/10 11:23:56 AM

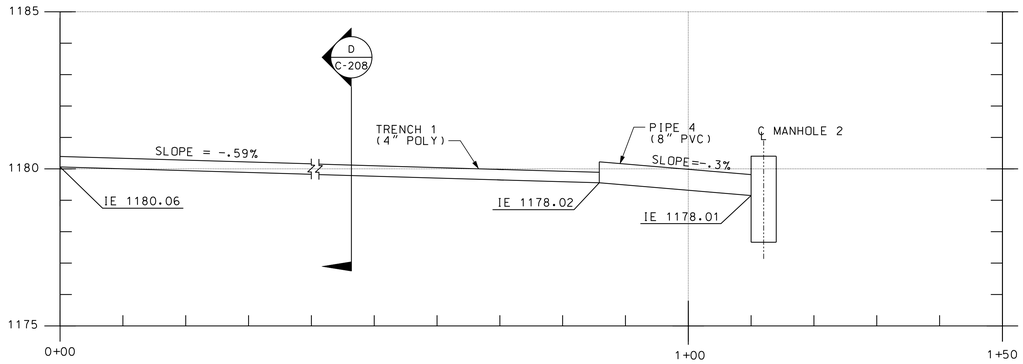

TRENCH DRAIN 1 PROFILE (A / C-116)

NOT TO SCALE

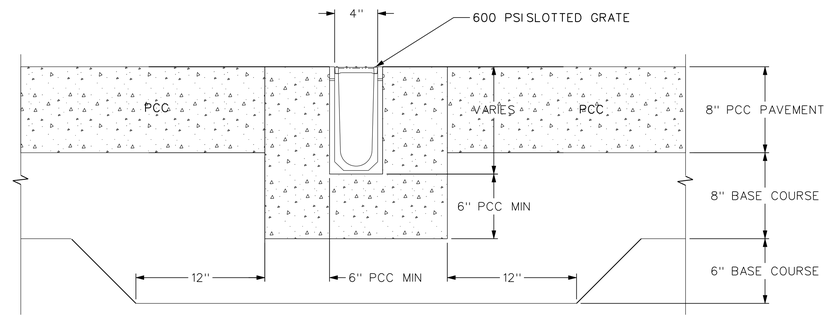

TRENCH DRAIN WITH REMOVABLE GRATE (D / C-208)

NOT TO SCALE

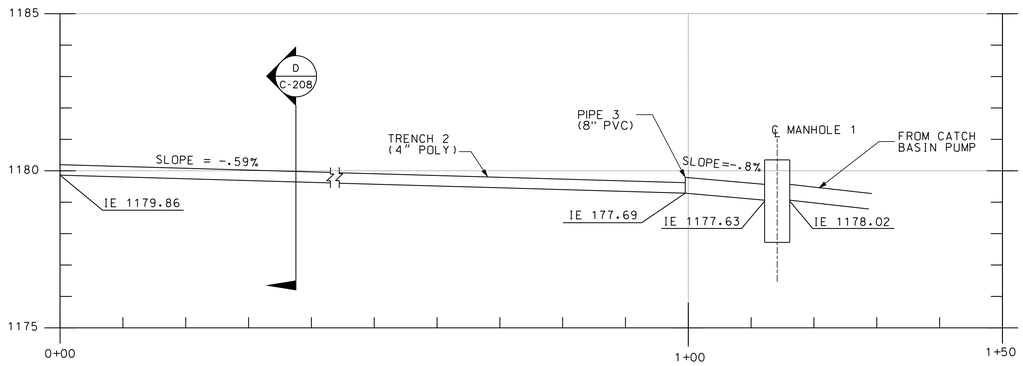

TRENCH DRAIN 2 PROFILE (B / C-116)

NOT TO SCALE

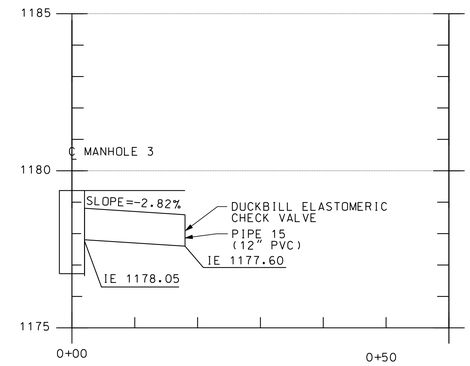

MANHOLE 3 OVERFLOW PROFILE (C / C-116)

NOT TO SCALE

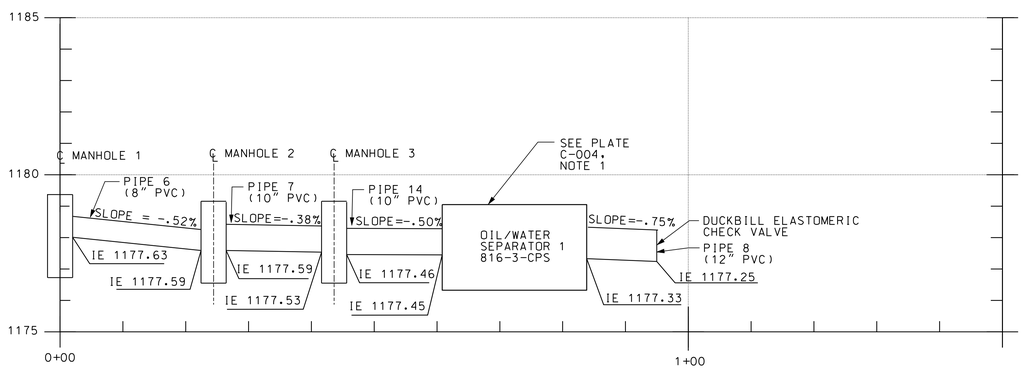

OIL/WATER SEPARATOR 1 PROFILE (C / C-116)

NOT TO SCALE

BASIC DESIGN INFORMATION:
INFLUENT CHARACTERISTICS:
OIL SPECIFIC GRAVITY: 0.88
OPERATING TEMPERATURE: 50 DEGREES
INFLUENT OIL CONCENTRATION: 100PPM
MEAN OIL DROPLET SIZE: 130 MICRONS
0.033 FT/MIN OIL RISE RATE
DESIGNED PER WASHINGTON STATE DEPARTMENT OF ECOLOGY

FLOW RATE	EFFLUENT QUALITY	100% COLLECTED SIZE
877 GPM	10 PPM	60 MICRON

US Army Corps of Engineers
Seattle District

Symbol	Description	Date	Appr.	Symbol	Description
		/ /			

Designed by: KATO
Drawn by: LEJON
Checked by: FISCHER
Date: OCT 2009
File: E-56-14-19
Rev.

U.S. ARMY ENGINEER DISTRICT, SEATTLE
CORPS OF ENGINEERS
SEATTLE, WASHINGTON
Prepared by:

ADDITIONAL WATER STORAGE PROJECT
HOWARD HANSON DAM
GREEN RIVER

UTILITY PROFILES

WASHINGTON

Plate number:
C-207
Sheet of

DESIGN FILE: I:\AECDESIGNS\HHAW\Civil\HHAWC-207P07.DGN
DATE AND TIME PLOTTED: 1/20/10 11:24:04 AM

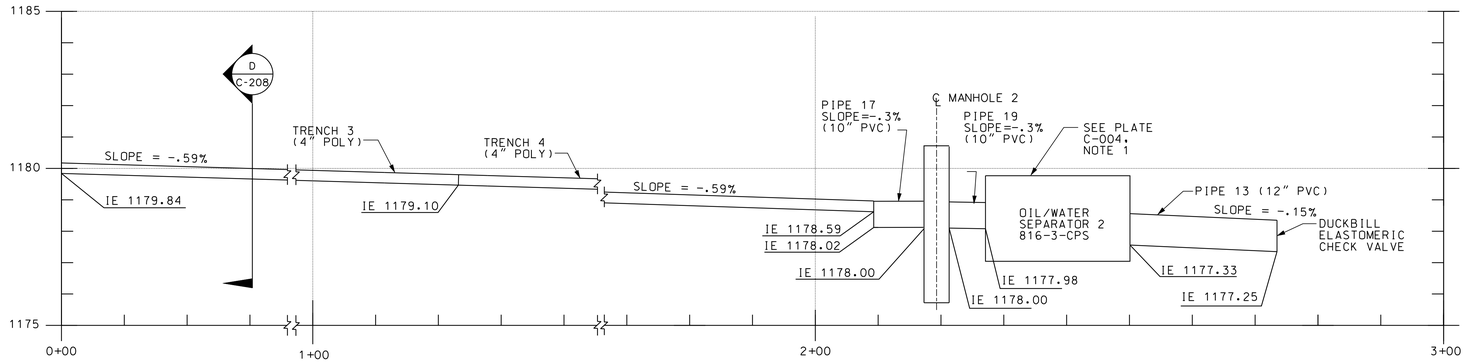

TRENCH DRAIN 3 PROFILE

NOT TO SCALE

A C-117

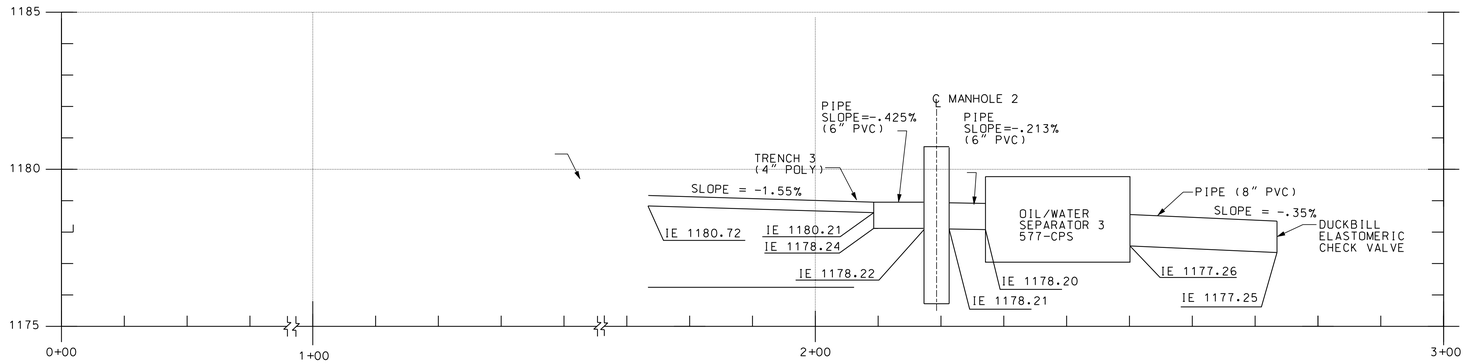

TRENCH DRAIN 4 PROFILE

NOT TO SCALE

D C-116

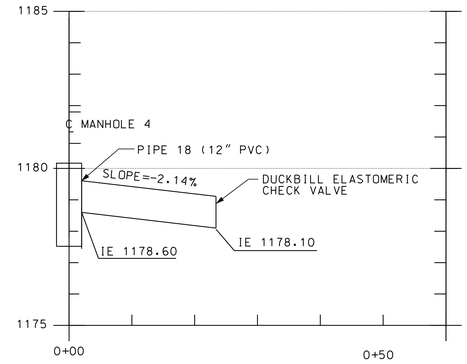

MANHOLE 4 OVERFLOW PROFILE

NOT TO SCALE

C C-116

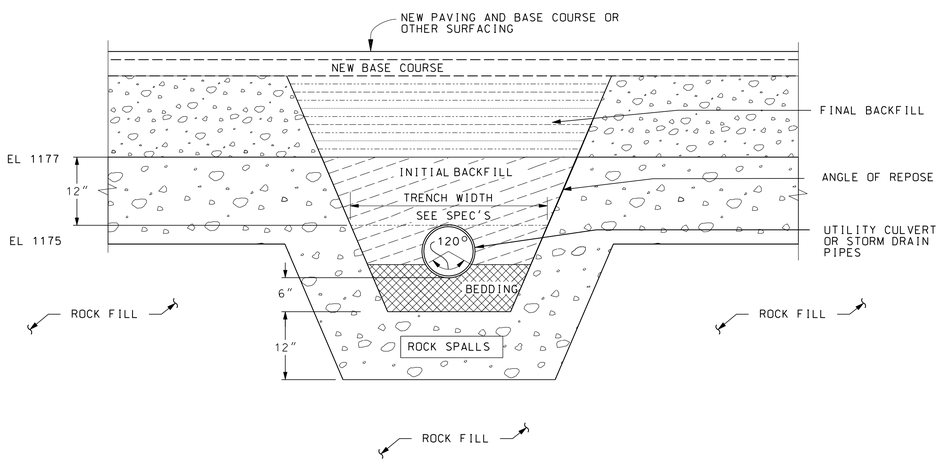

TYPICAL PIPE LAYING TRENCH DETAIL
FOR UTILITY, CULVERT, STORM
DRAIN PIPES, OR UNDERGROUND TANKS

UTILITY TRENCH AND BACKFILL DETAIL IN ROCK FILL AREAS

NOT TO SCALE

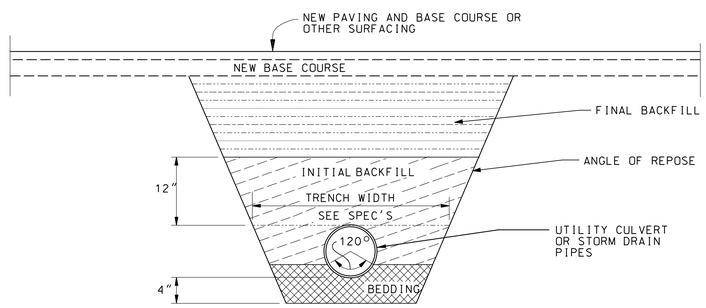

TYPICAL PIPE LAYING TRENCH DETAIL
FOR UTILITY, CULVERT OR STORM
DRAIN PIPES

UTILITY TRENCH AND BACKFILL DETAIL IN NON-ROCK FILL AREAS

NOT TO SCALE

US Army Corps of Engineers
Seattle District

Symbol	Description	Date	Appr.	Symbol	Description
		/ /			

Designed by: KATO
Drawn by: LEJON
Checked by: FISCHER
Date: OCT 2009
File: E-56-14-19
Rev.

U.S. ARMY ENGINEER DISTRICT, SEATTLE
CORPS OF ENGINEERS
SEATTLE, WASHINGTON
Prepared by:

ADDITIONAL WATER STORAGE PROJECT
HOWARD HANSON DAM
GREEN RIVER WASHINGTON

UTILITY PROFILE AND DETAILS

Plate number:
C-208
Sheet of

DATE AND TIME PLOTTED: 1/20/10 11:24:08 AM DESIGN FILE: I:\AECDESIGNS\HHAW\Civil\HHAWC-208P08.DGN

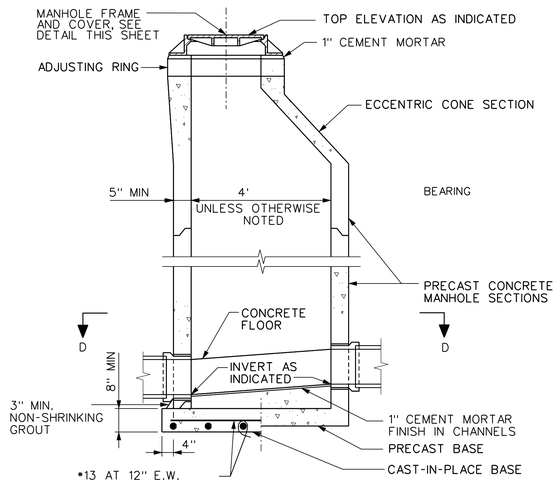

TYPICAL SECTION

NOT TO SCALE

PRECAST CONCRETE MANHOLE

E
C-116

NOT TO SCALE

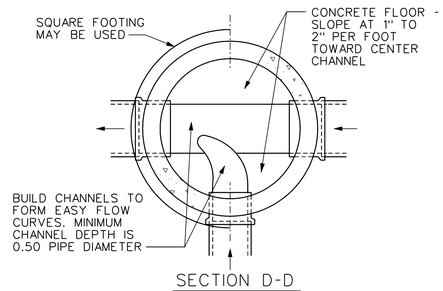

SECTION D-D

NOT TO SCALE

HALF PLAN

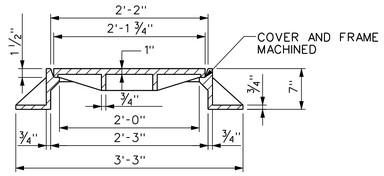

ELEVATION

MANHOLE FRAME AND COVER

NOT TO SCALE

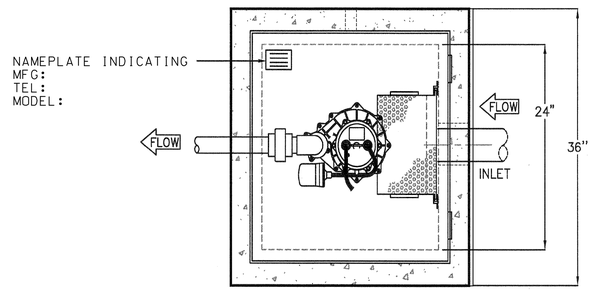

PLAN VIEW

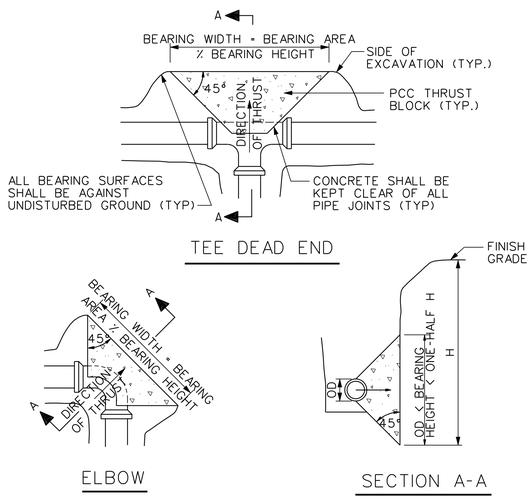

TEE DEAD END

ELBOW

SECTION A-A

BEARING AREAS EACH DIRECTION OF THRUST IN SQUARE FEET

PIPE SIZE	TEES AND DEAD ENDS	90° ELBOWS	45° ELBOWS	22.5° ELBOWS	11.25° ELBOWS
8"	1.9	2.7	1.4	.9	.9

TYPICAL THRUST BLOCK INSTALLATION

NOT TO SCALE

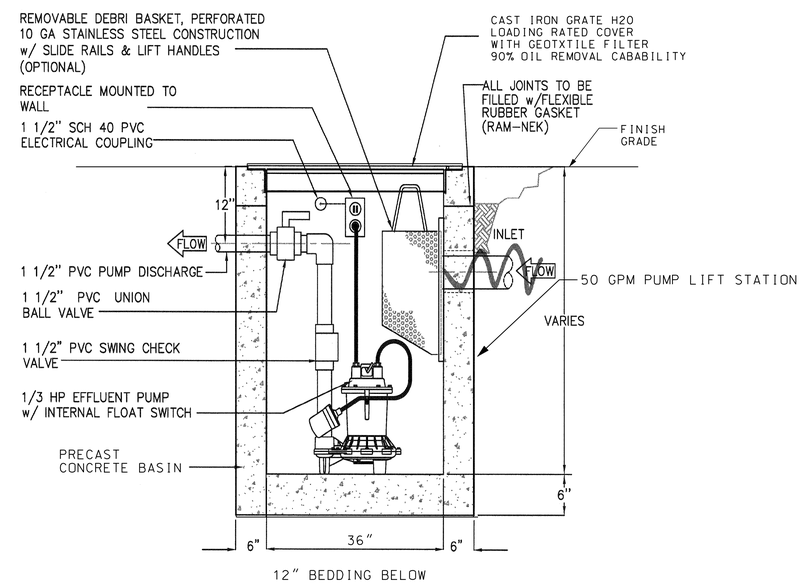

CB AND SUMP PUMP

F
C-116

NOT TO SCALE

US Army Corps of Engineers
Seattle District

Symbol	Description	Date	Appr.	Symbol	Description
		/ /			

Designed by: KATO
Date: OCT 2009
Drawn by: LE JON
File: E-56-14-19
Checked by: FISHCER
Rev.

U.S. ARMY ENGINEER DISTRICT, SEATTLE
CORPS OF ENGINEERS
SEATTLE, WASHINGTON
Prepared by:

ADDITIONAL WATER STORAGE PROJECT
HOWARD HANSON DAM
UTILITY DETAIL
GREEN RIVER WASHINGTON

Plate number:
C-209
Sheet of

DATE AND TIME PLOTTED: 1/20/10 11:24:14 AM DESIGN FILE: I:\AECDESIGNS\HHAW\Civil\HHAWC-209P09.DGN

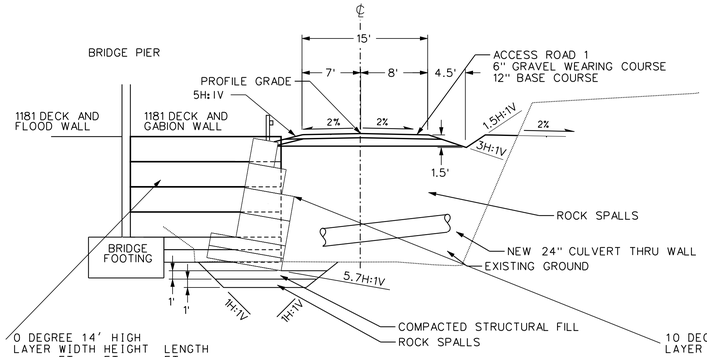

0 DEGREE 14' HIGH

LAYER	WIDTH FT	HEIGHT FT	LENGTH FT
6	7.5	3	18
5	7.5	3	18
4	9.0	3	18
3	9.0	3	18
2	12.0	1.5	14
1	12.0	1.5	14

10 DEGREE 15' HIGH

LAYER	WIDTH FT	HEIGHT FT
6	3.0	3
5	4.5	3
4	6.0	3
3	6.0	3
2	9.0	1.5
1	9.0	1.5

ACCESS ROAD 1 15' GABION WALL
1H:1V

B C-108 C-202

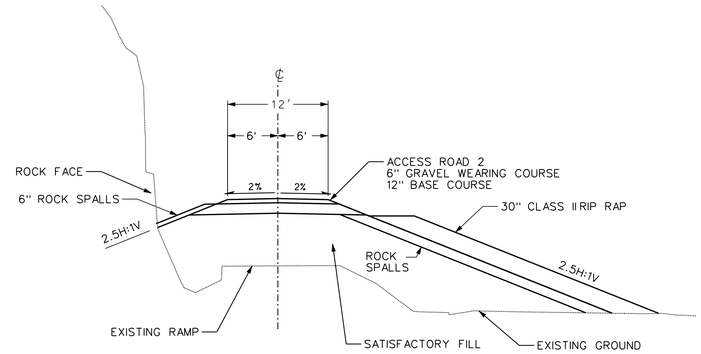

TYPICAL SECTION ACCESS ROAD 2
1H:1V

A C-108 C-203

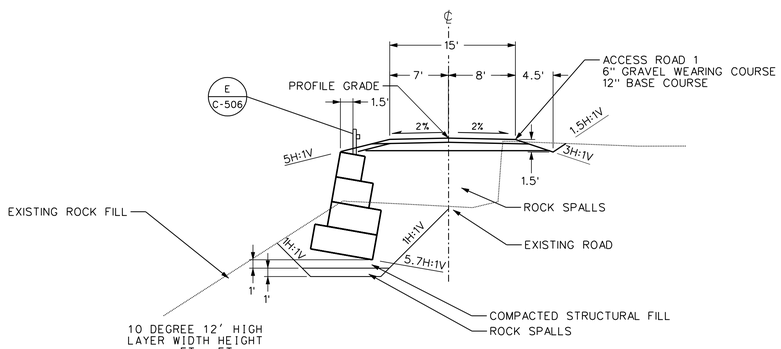

10 DEGREE 12' HIGH

LAYER	WIDTH FT	HEIGHT FT
4	3.0	3
3	4.5	3
2	6.0	3
1	7.5	3

TYPICAL SECTION 12' GABION WALL
1H:1V

C C-108 C-202

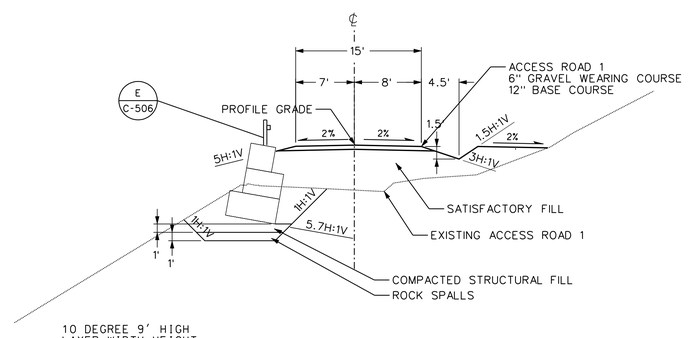

10 DEGREE 9' HIGH

LAYER	WIDTH FT	HEIGHT FT
3	3.0	3
2	4.5	3
1	6.0	3

TYPICAL SECTION 9' GABION WALL
1H:1V

D C-108 C-202

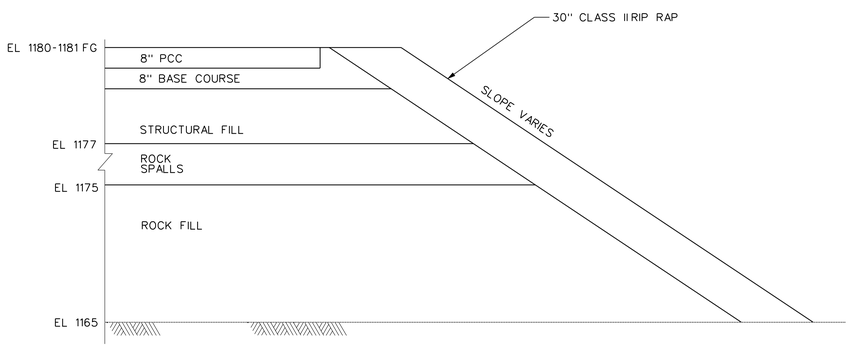

TYPICAL SECTION 1181 DECK
1H:1V

D C-108

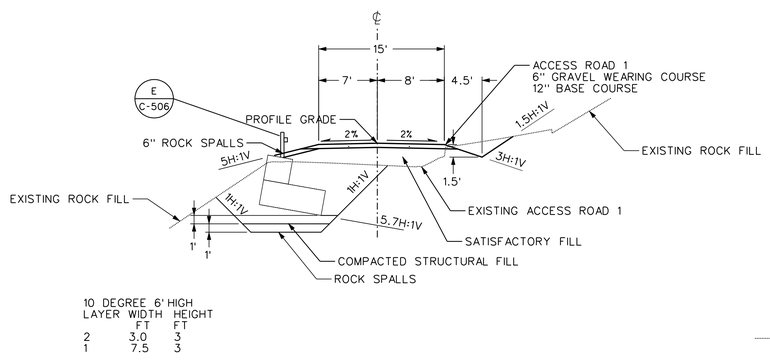

10 DEGREE 6' HIGH

LAYER	WIDTH FT	HEIGHT FT
2	3.0	3
1	7.5	3

TYPICAL SECTION 6' GABION WALL
1H:1V

E C-107 C-202

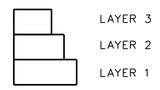

NOTE:
LAYER STARTS AT BOTTOM FOR GABION WALL

LEGEND

- EXISTING SURFACE
- ACCESS ROAD
- GABION RETAINING WALL
- CONCRETE RETAINING WALL OR STRUCTURE

US Army Corps of Engineers
Seattle District

Symbol	Description	Date	Appr.	Symbol	Description
		/ /			

Designed by: KATO
Drawn by: LEJON
Checked by: FISCHER
Date: OCT 2009
File: E-56-14-19
Rev.

U.S. ARMY ENGINEER DISTRICT SEATTLE
CORPS OF ENGINEERS
SEATTLE WASHINGTON
Prepared by:

ADDITIONAL WATER STORAGE PROJECT
HOWARD HANSON DAM
ACCESS ROADS 1 & 2
CROSS SECTIONS
GREEN RIVER WASHINGTON

Plate number:
C-301
Sheet of

DATE AND TIME PLOTTED: 1/20/10 11:24:24 AM DESIGN FILE: I:\AECDESIGNS\HHAW\Civil\HHAWC-301C01.DGN

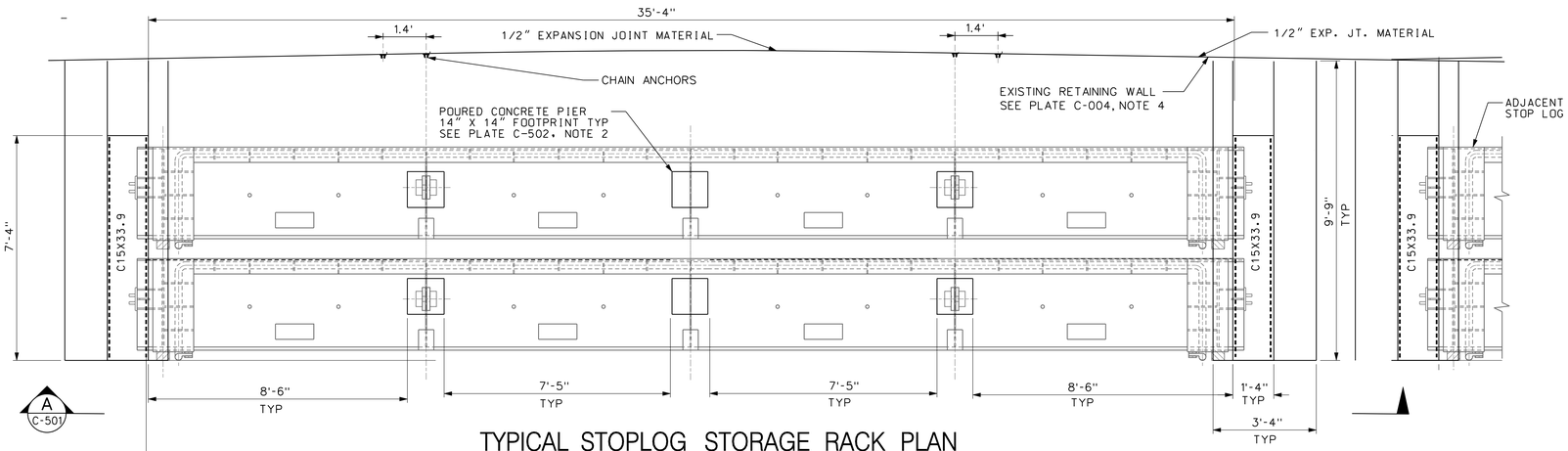

TYPICAL STOPLOG STORAGE RACK PLAN

NOT TO SCALE

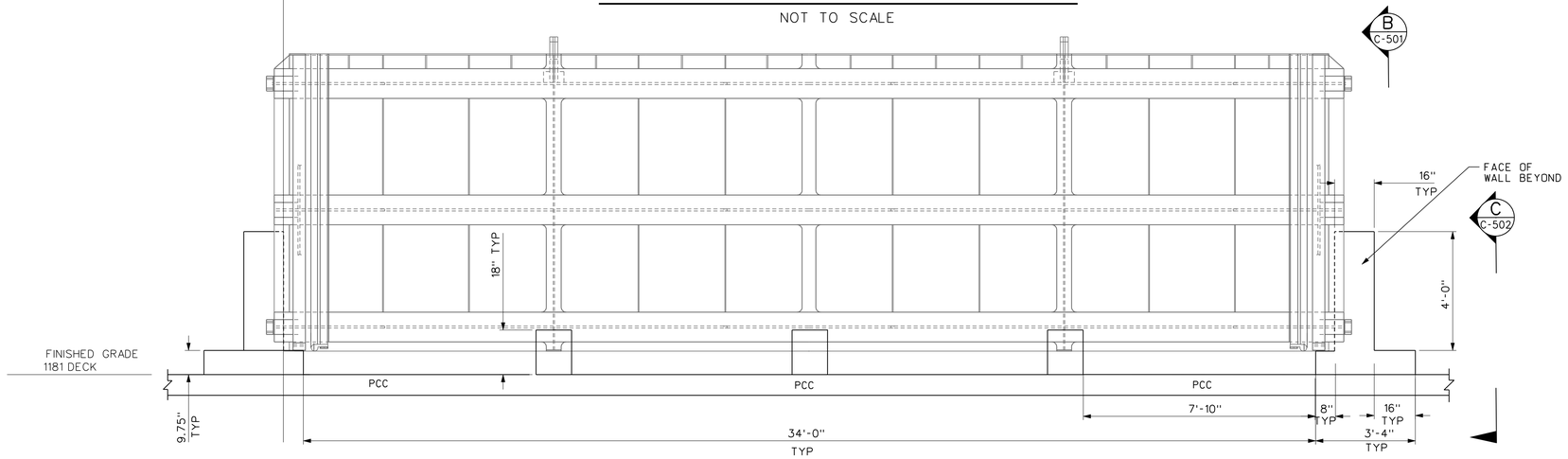

STOPLOG STORAGE RACK – ELEVATION

NOT TO SCALE

A
C-106
C-501

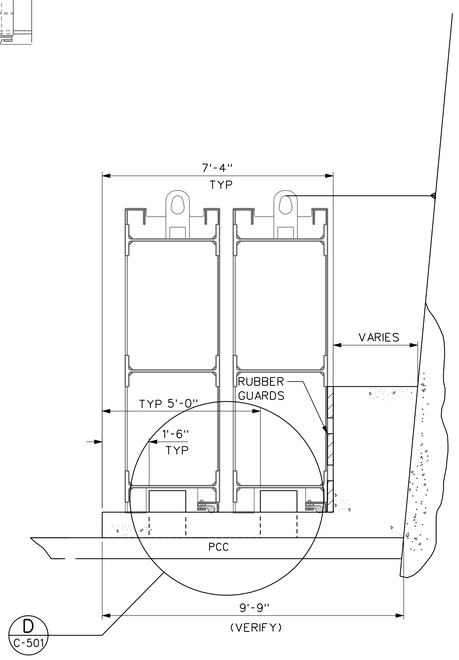

STOPLOG STORAGE RACK – SECTION

NOT TO SCALE

B
C-501

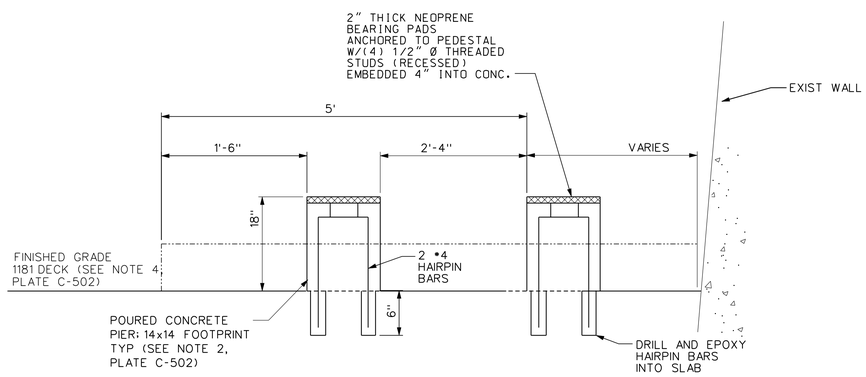

STOPLOG STORAGE RACK

NOT TO SCALE

D
C-501

US Army Corps of Engineers
Seattle District

Symbol	Description	Date	Appr.	Symbol	Description
		/ /			

Designed by: DJB
Drawn by: DJB
Checked by:
Date: OCT 2009
File: E-56-14-19
Rev.

U.S.ARMY ENGINEER DISTRICT,SEATTLE
CORPS OF ENGINEERS
SEATTLE, WASHINGTON
Prepared by:

ADDITIONAL WATER STORAGE PROJECT
HOWARD HANSON DAM
STOPLOG STORAGE RACK
DETAILS 1
GREEN RIVER WASHINGTON

Plate number:
C-501
Sheet of

DATE AND TIME PLOTTED: 1/20/10 11:24:31 AM DESIGN FILE: I:\AECDESIGNS\HHAW\Civil\HHAWC-501DET.DGN

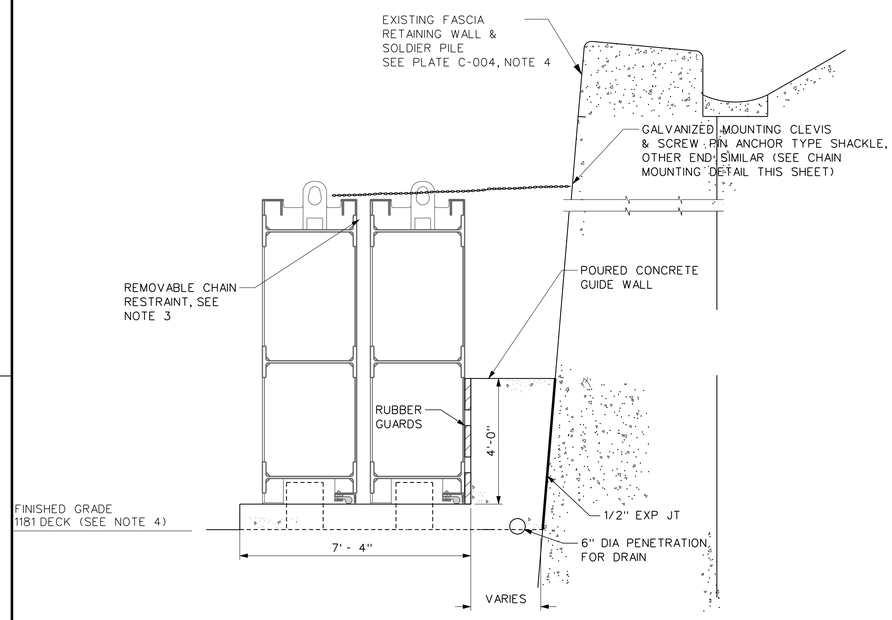

STOPLOG STORAGE RACK DETAIL I

NOT TO SCALE

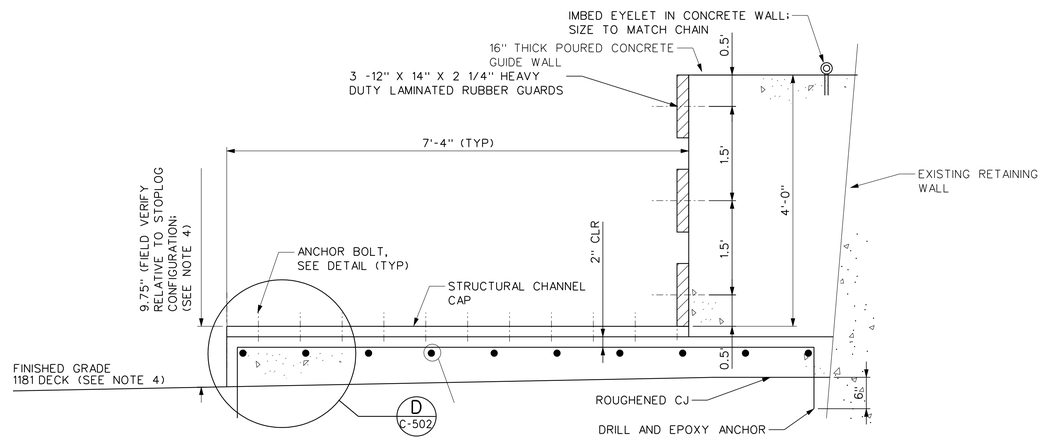

STOPLOG STORAGE RACK

NOT TO SCALE

C
C-501

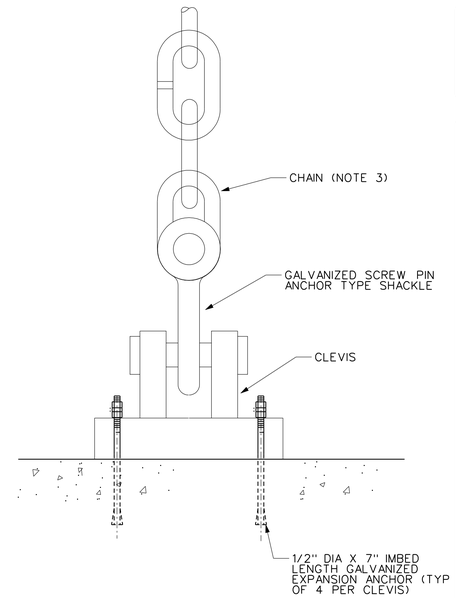

NOTE: PROVIDE TWO PER PAIR OF STOPLOGS

CHAIN MOUNTING DETAIL

NOT TO SCALE

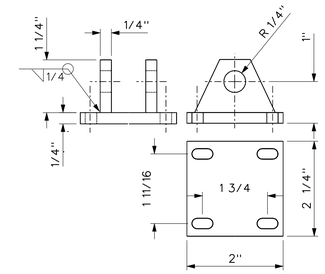

NOTE: COMMERCIAL ITEMS HAVING SIMILAR DIMENSIONS MAY BE SUBSTITUTED FOR APPROVAL

CLEVIS DETAIL

NOT TO SCALE

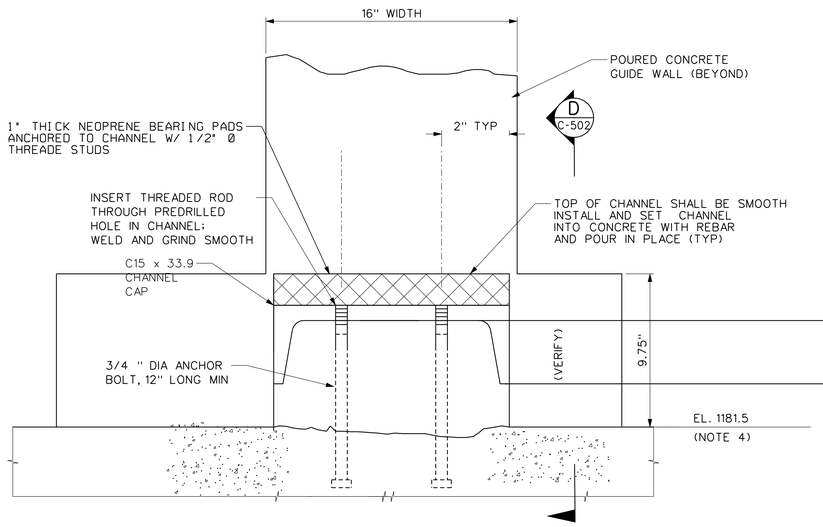

STOPLOG STORAGE RACK – ANCHOR DETAIL

NOT TO SCALE

A
C-502

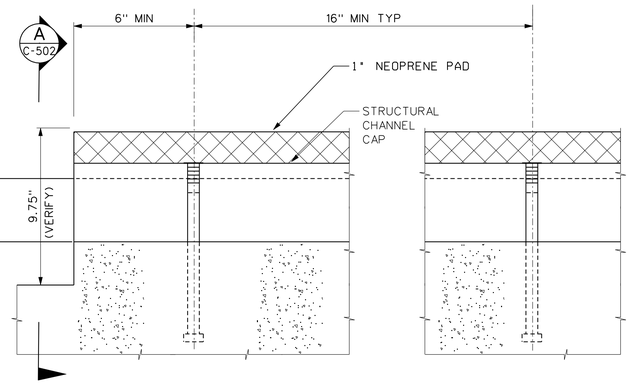

STOPLOG STORAGE RACK – ELEV

NOT TO SCALE

D
C-502

STOPLOG RACK NOTES:

1. STOPLOG STORAGE & SUPPORT FIXTURES SHALL BE CONFIGURED TO MATCH EACH INDIVIDUAL STOPLOG.

2. CONCRETE SUPPORT PIER HEIGHT SHALL BE CONFIRMED IN THE FIELD TO MATE WITH STOPLOG FIT TO FULLY SUPPORT THE DOWNSTREAM STOPLOG STRUCTURE WITH NO COMPRESSION OF THE STOPLOG SEALS AS SHOWN. CONCRETE CRADLE SHALL BE CONFIGURED SUCH THAT STOPLOG BOTTOM SEALS CLEAR CONCRETE; UNDER NO CIRCUMSTANCE SHALL THE STOPLOG RESTING POSITION COMPRESS THE SEALS.

3. CHAIN SHALL BE GRADE 80 1/2" ALLOY STEEL HIGH STRENGTH; WITH SHACKLE & CLEVIS EACH END. LENGTH SHALL BE SPECIFIC TO EACH STOPLOG (APPROX 50 FEET EACH).

4. STOPLOGS SHALL BE STORED LEVEL. FIELD VERIFY ALL DIMENSIONS AND ACCOUNT FOR SLOPING OF THE 1181 SURFACE FOR DRAINAGE, RETAINING WALL CURVATURE, ETC.

5. FORKLIFT STRONGBACK AND TIE-DOWN (FOR STOPLOG MOVEMENT AND PLACEMENT) SHALL BE PROVIDED SEPARATELY (NOT IN CONTRACT).

US Army Corps of Engineers
Seattle District

Symbol	Description	Date	Appr.	Symbol	Description
		/ /			

Designed by: DJB
Drawn by: DJB
Checked by:
Date: OCT 2009
File # E-56-14-19
Rev.

U.S.ARMY ENGINEER DISTRICT,SEATTLE
CORPS OF ENGINEERS
SEATTLE, WASHINGTON
Prepared by:

ADDITIONAL WATER STORAGE PROJECT
HOWARD HANSON DAM
STOPLOG STORAGE RACK DETAILS 2
GREEN RIVER WASHINGTON

Plate number:
C-502
Sheet of

DATE AND TIME PLOTTED: 1/20/10 11:24:39 AM DESIGN FILE: I:\AECDESIGNS\HHAW\Civil\HHAWC-5020ET.DGN

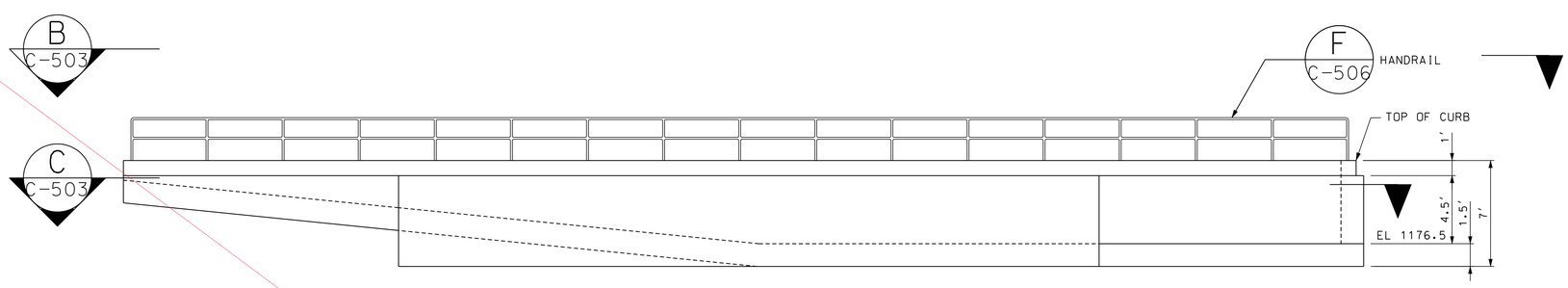

TRUCK RETAINING WALLS SECTION A C-204 C-503

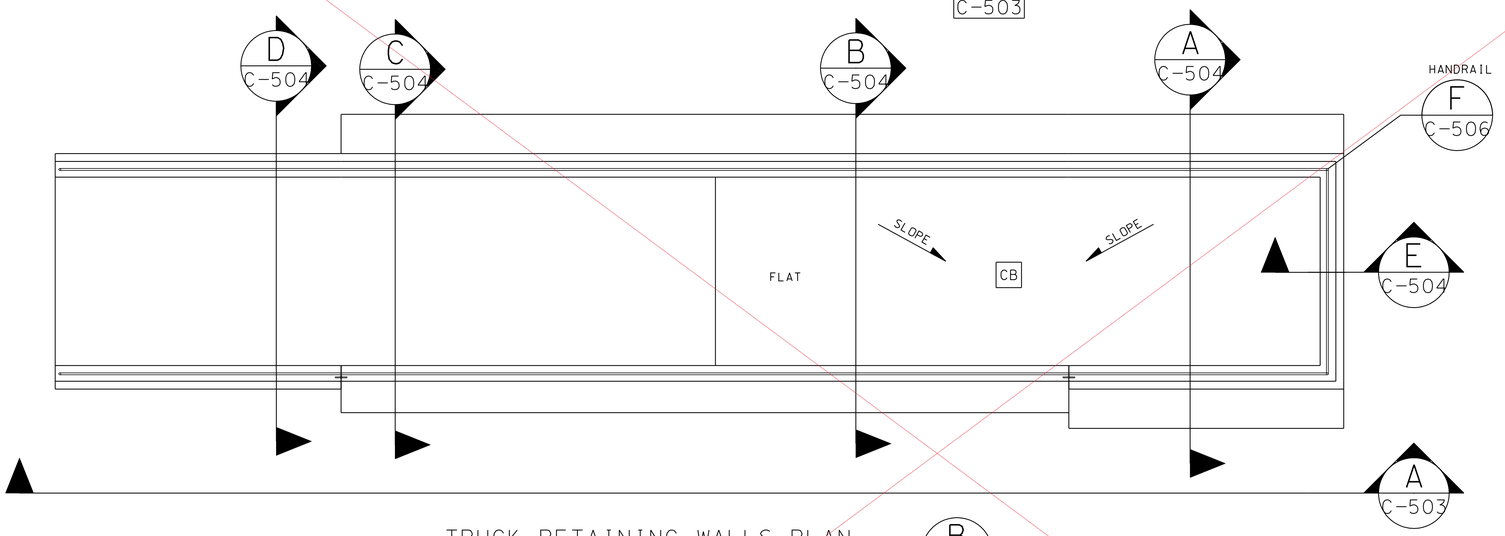

TRUCK RETAINING WALLS PLAN B C-503

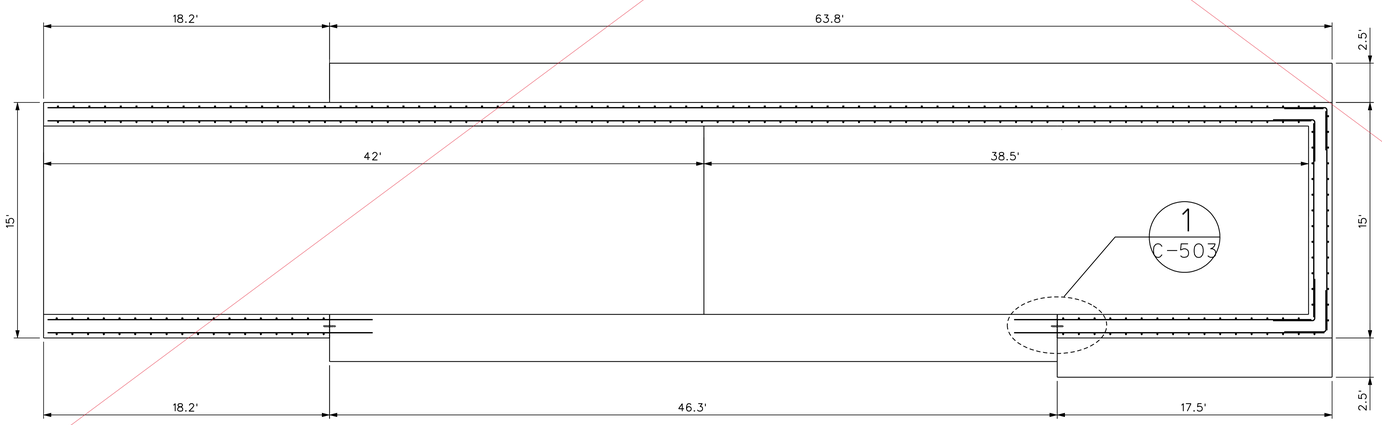

WALL REINFORCEMENT C C-503

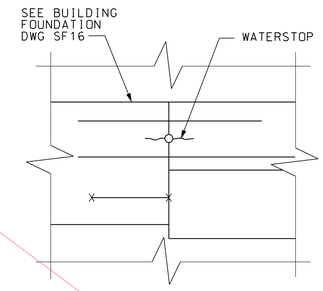

FOUNDATION CONNECTION DETAIL 1 C-503

NOT TO SCALE

US Army Corps of Engineers
Seattle District

Symbol	Description	Date	Appr.	Symbol	Description
		/ /			

Designed by: LIKAVEC
Drawn by: LIKAVEC
Checked by:
Date: OCT 2009
File: E-56-14-19
Rev.

U.S.ARMY ENGINEER DISTRICT,SEATTLE
CORPS OF ENGINEERS
SEATTLE, WASHINGTON
Prepared by:

ADDITIONAL WATER STORAGE PROJECT
HOWARD HANSON DAM
FISH TRUCK RETAINING WALL DETAILS 1
GREEN RIVER WASHINGTON

Plate number:
C-503
Sheet of

DATE AND TIME PLOTTED: 1/20/10 11:24:43 AM DESIGN FILE: I:\AECDESIGNS\HHAW\Civil\HHAWC-5030ET.DGN

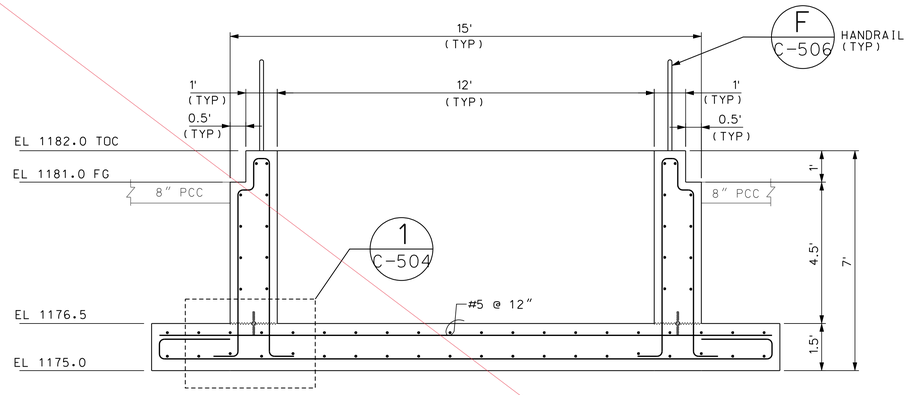

RETAINING WALL SECTION A C-503

1/2" = 1' - 0"

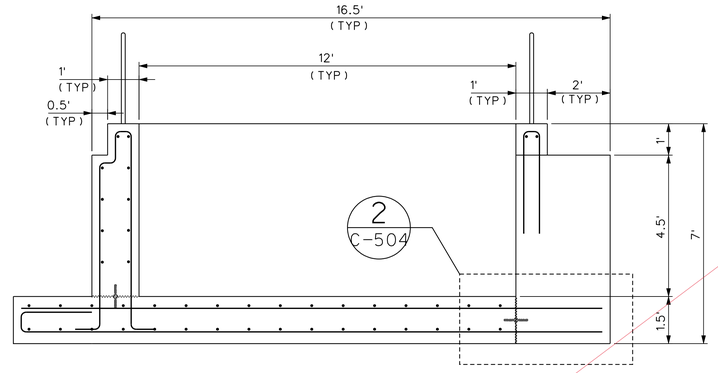

RETAINING WALL SECTION B C-503

1/2" = 1' - 0"

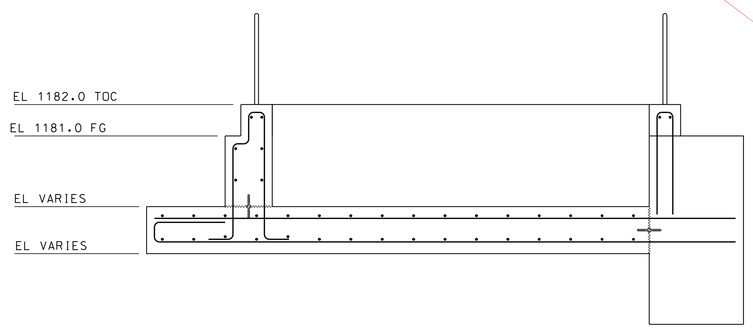

RETAINING WALL SECTION C C-503

1/2" = 1' - 0"

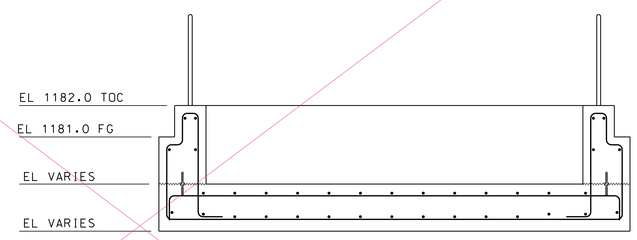

RETAINING WALL SECTION D C-503

1/2" = 1' - 0"

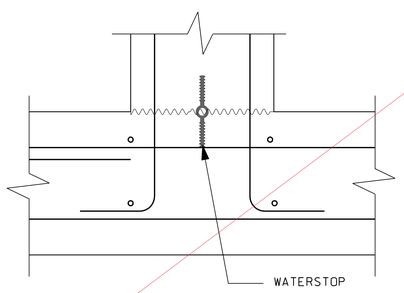

CONSTRUCTION JOINT DETAIL 1 C-504

NOT TO SCALE

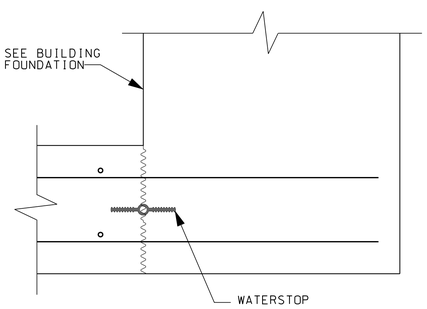

CONNECTION TO BUILDING FOUNDATION 2 C-504

NOT TO SCALE

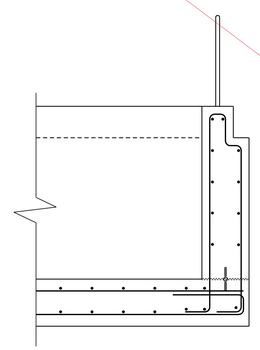

RETAINING WALL SECTION E C-503

1/2" = 1' - 0"

US Army Corps of Engineers
Seattle District

Symbol	Description	Date	Appr.	Symbol	Description
		/ /			

Designed by: LIKAVEC
Date: OCT 2009
Drawn by: LIKAVEC
File: E-56-14-19
Checked by: X
Rev.

U.S.ARMY ENGINEER DISTRICT,SEATTLE
CORPS OF ENGINEERS
SEATTLE, WASHINGTON

Prepared by:

ADDITIONAL WATER STORAGE PROJECT
HOWARD HANSON DAM

FISH TRUCK RETAINING WALL DETAILS 2

GREEN RIVER WASHINGTON

Plate number:
C-504
Sheet of

DATE AND TIME PLOTTED: 1/20/10 11:24:45 AM DESIGN FILE: I:\AECDESIGNS\HHAW\Civil\HHAWC-5040ET.DGN

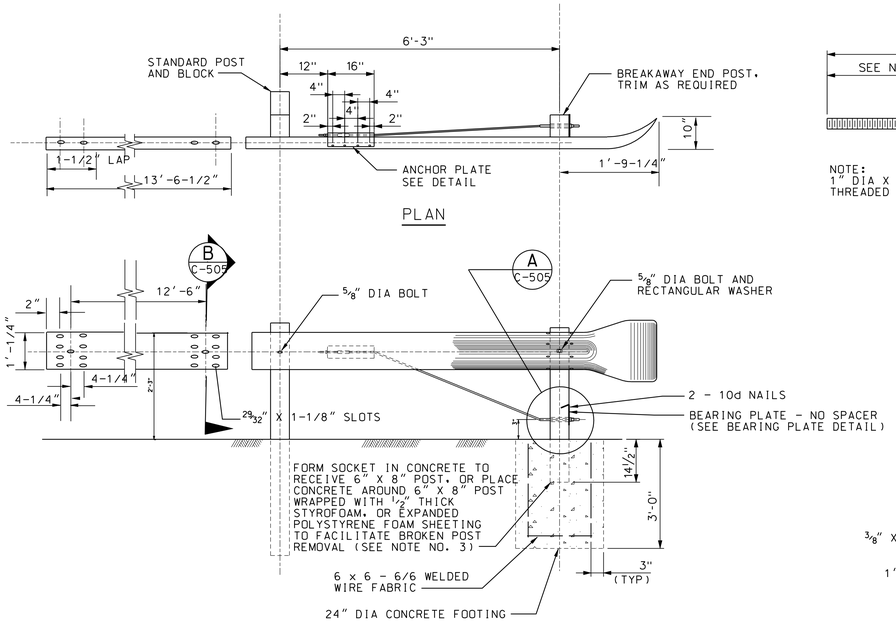

W-BEAM GUARDRAIL WITH TERMINAL

NOT TO SCALE

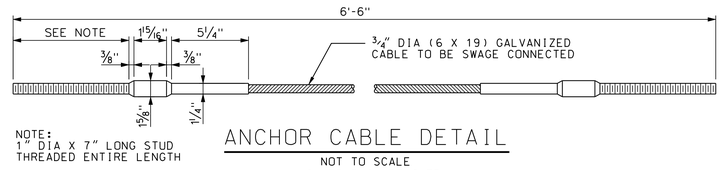

NOTE:
1" DIA X 7" LONG STUD THREADED ENTIRE LENGTH

ANCHOR CABLE DETAIL

NOT TO SCALE
(GUARD RAIL REMOVED)

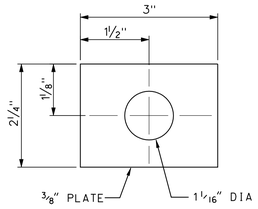

END PLATE DETAIL

NOT TO SCALE

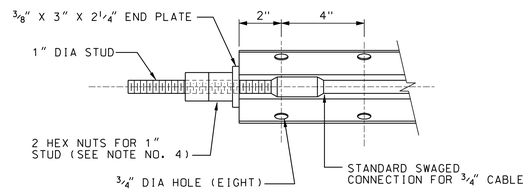

ELEVATION

(GUARD RAIL REMOVED)

NOTES:

1. ALL GUARDRAIL POST HARDWARE AND ACCESSORIES SHALL BE GALVANIZED IN ACCORDANCE WITH ASTM A123 OR ASTM A153, EXCEPT AS OTHERWISE NOTED. ALL NUTS SHALL COMPLY WITH AMERICAN HEX ANSI SPECIFICATION B18.22.
2. 12'-6" GUARDRAIL LENGTHS SHALL BE USED. GUARDRAIL SHALL BE PRECURVED FOR CURVES LESS THAN 150' RADII (RADIUS TO FACE OF RAIL).
3. GUARDRAIL POSTS SHALL BE PLUMBED AND SET VERTICALLY. POST SPACING SHALL BE 6'-3" UNLESS OTHERWISE SHOWN.
4. OUTSIDE NUT SHALL BE TORQUED AGAINST INSIDE NUT A MINIMUM OF 100 FT-LBS.
5. SEE GUARDRAIL SECTIONS. PLATE C-506.

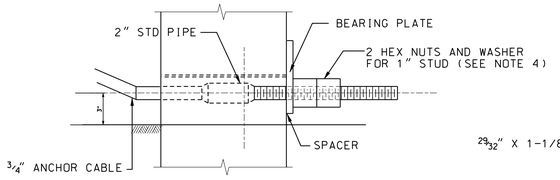

DETAIL A C-505

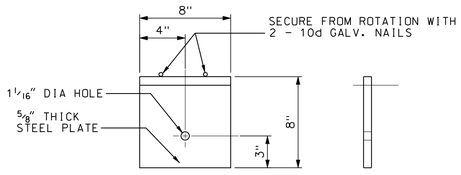

BEARING PLATE DETAIL

NOT TO SCALE

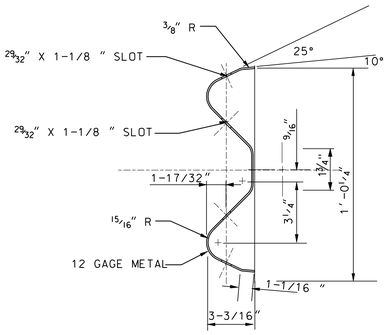

SECTION B C-505

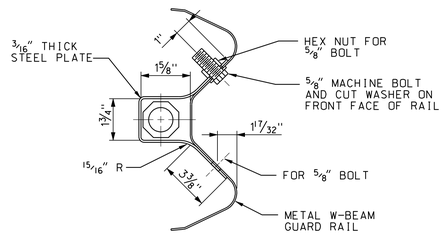

LONGITUDINAL VIEW

(END PLATE REMOVED)

ANCHOR PLATE DETAIL

NOT TO SCALE

US Army Corps of Engineers
Seattle District

Symbol	Description	Date	Appr.	Symbol	Description
		/ /			

Designed by: KATO
Drawn by: LEJON
Checked by: FISCHER
Date: OCT 2009
File: E-56-14-19
Rev.

U.S.ARMY ENGINEER DISTRICT,SEATTLE
CORPS OF ENGINEERS
SEATTLE, WASHINGTON
Prepared by:

ADDITIONAL WATER STORAGE PROJECT
HOWARD HANSON DAM
GUARD RAIL DETAILS
GREEN RIVER WASHINGTON

Plate number:
C-505
Sheet of

DATE AND TIME PLOTTED: 1/20/10 11:24:49 AM DESIGN FILE: F:\AECDESIGNS\HHAW\Civil\HHAWC-5050ET.DGN

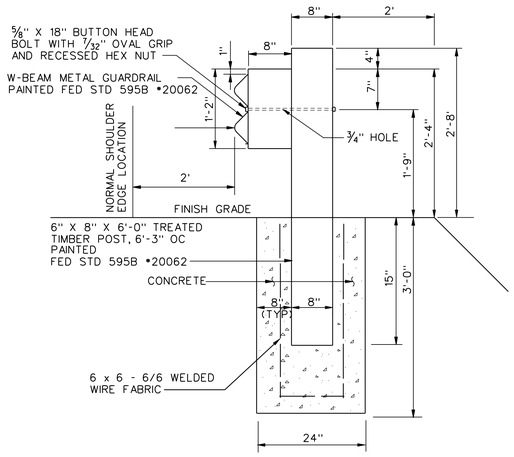

POST AND GUARDRAIL SECTION

NOT TO SCALE

D / C-301

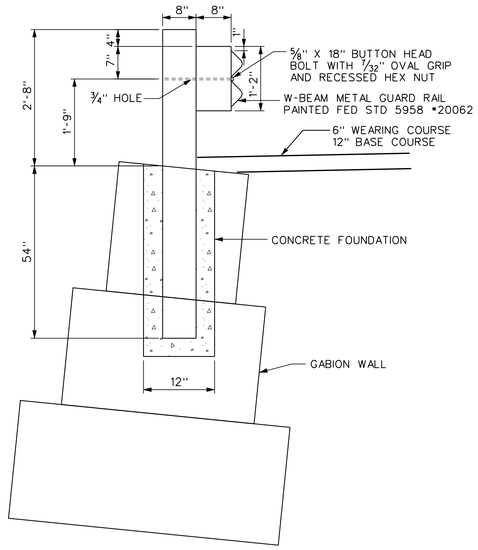

POST AND GUARDRAIL IN GABION WALL

NOT TO SCALE

E / C-301

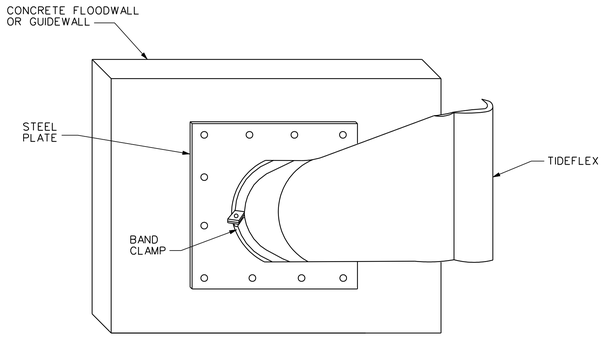

DUCKBILL ELASTOMERIC CHECK VALVE

NOT TO SCALE

C / C-116 / C-117

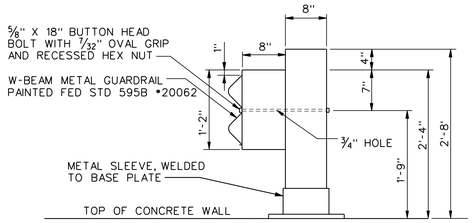

POST AND GUARDRAIL IN CONCRETE WALL

NOT TO SCALE

D / S-255

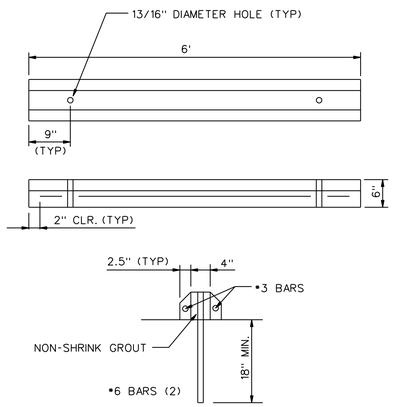

PRECAST CURB STOP

NOT TO SCALE

G / C-106

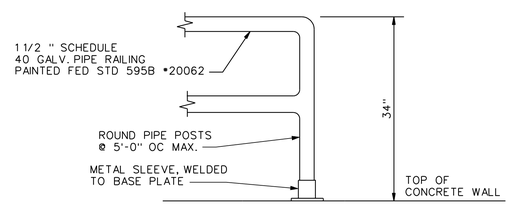

HAND RAIL DETAIL

NOT TO SCALE

F / C-106 / C-503

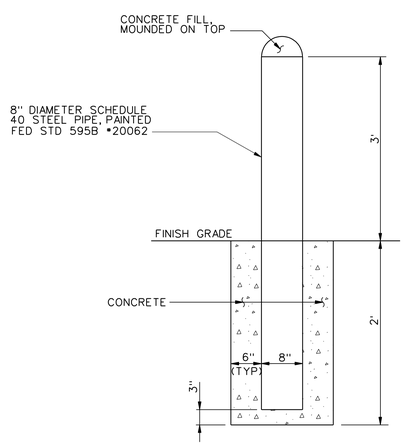

BOLLARD DETAIL

NOT TO SCALE

E / C-106

US Army Corps of Engineers
Seattle District

Symbol	Description	Date	Appr.	Symbol	Description
		/ /			

Designed by: KATO
Drawn by: KATO
Checked by: FISCHER
Date: OCT 2009
File: E-56-14-19
Rev.

U.S.ARMY ENGINEER DISTRICT,SEATTLE
CORPS OF ENGINEERS
SEATTLE, WASHINGTON
Prepared by:

ADDITIONAL WATER STORAGE PROJECT
HOWARD HANSON DAM
MISCELLANEOUS DETAILS
GREEN RIVER WASHINGTON

Plate number:
C-506
Sheet of

DATE AND TIME PLOTTED: 1/20/10 11:24:52 AM DESIGN FILE: I:\AECDESIGNS\HHAW\Civil\HHAWC-5060ET.DGN

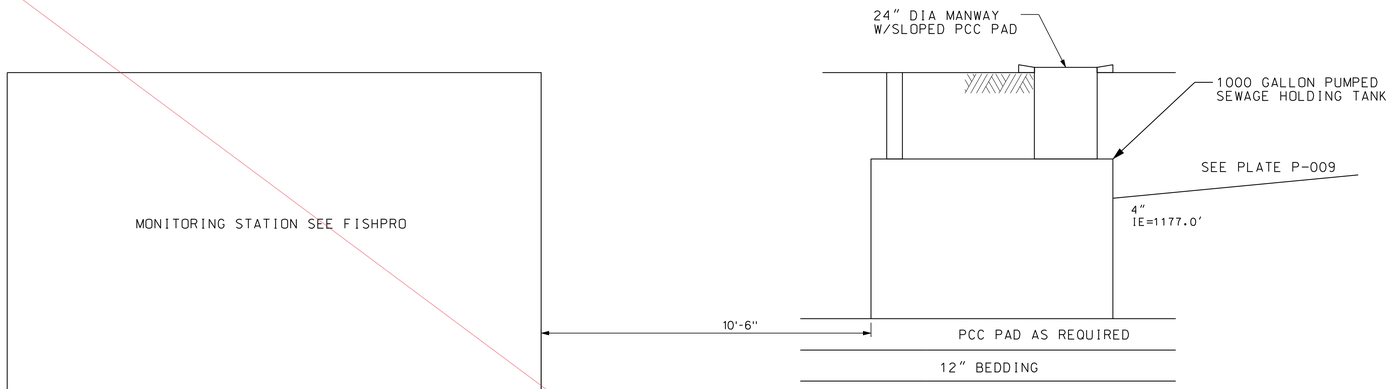

NOTE:
1. AUDIBLE AND VISUAL ALARMS SET TO SIGNAL AT THE "TIME-TO-PUMP"(630 GALLONS) AND EXCEEDING RESERVE STORAGE VOLUME" (900 GALLONS) LEVELS.
2. BOTH ALARM ENUNCIATORS MUST BE LOCATED OUTSIDE THE FACILITY.
3. ONLY THE AUDIBLE ALARM MY BE TURNED OFF BY THE USER.

SEWAGE HOLDING TANK

NOT TO SCALE

A
C-102
C-116
C-204

US Army Corps of Engineers
Seattle District

Symbol	Description	Date	Appr.	Symbol	Description
		/ /			

Designed by: KATO
Drawn by: KATO
Checked by: FISCHER
Date: OCT 2009
File: E-56-14-19
Rev.

U.S.ARMY ENGINEER DISTRICT,SEATTLE
CORPS OF ENGINEERS
SEATTLE, WASHINGTON
Prepared by:

ADDITIONAL WATER STORAGE PROJECT
HOWARD HANSON DAM
UNDERGROUND TANK DETAILS
GREEN RIVER WASHINGTON

Plate number:
C-507
Sheet of

DATE AND TIME PLOTTED: 1/20/10 11:24:55 AM DESIGN FILE: I:\AECDESIGNS\HHAW\Civil\HHAWC-5070ET.DGN

US Army Corps of Engineers ®
Seattle District

HOWARD A. HANSON DAM
LEFT BANK DRAINAGE

GREEN RIVER, WASHINGTON

PN 384734 FY 20XX

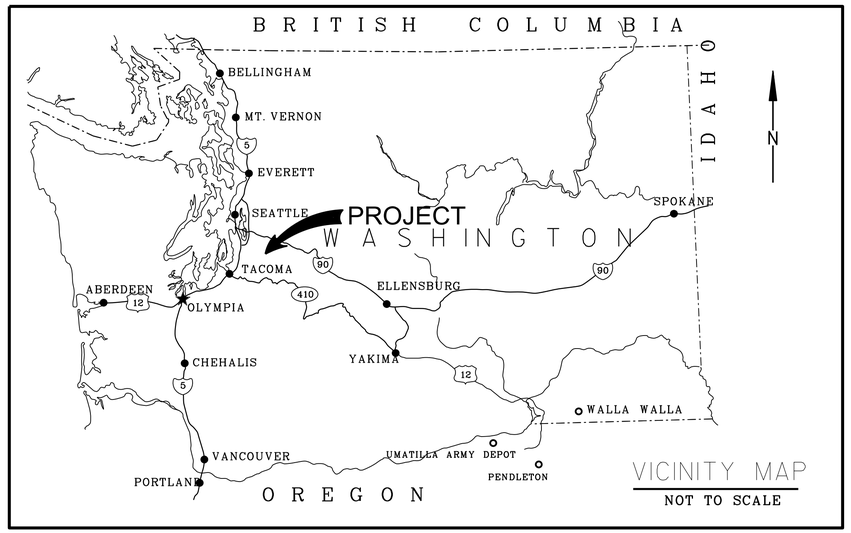

PLATE NO.	TITLE
GENERAL	
G-001	COVER SHEET
G-002	GENERAL NOTES, ABBREVIATIONS, AND LEGEND
G-003	SITE ACCESS AND HAUL ROUTE
CIVIL	
C-101	SITE PLAN
C-201	MIDDLE ROAD PLAN AND PROFILE
C-202	DRAINAGE PLAN AND PROFILE
C-203	LOWER ROAD PLAN AND PROFILE
C-301	MIDDLE SECTIONS 1 (STA. 0+00 TO 2+00)
C-302	MIDDLE SECTIONS 2 (STA. 2+25 TO 4+00)
C-303	MIDDLE SECTIONS 3 (STA. 4+25 TO 5+75)
C-304	MIDDLE SECTIONS 4 (STA. 6+00 TO 6+97)
C-401	ENLARGED DRAINAGE PLAN
C-501	MISC. DETAILS

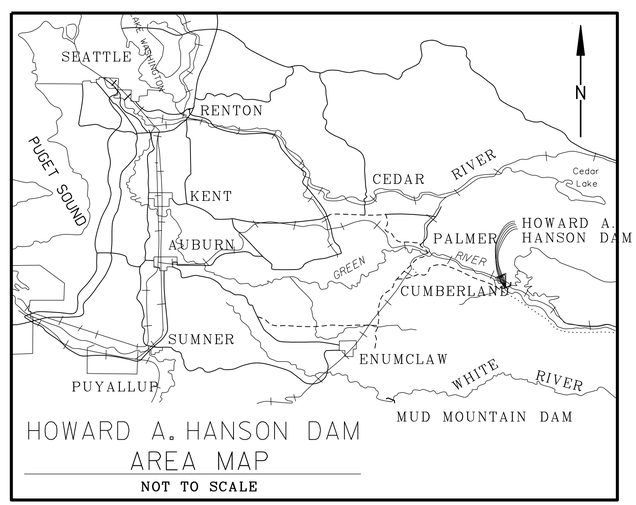

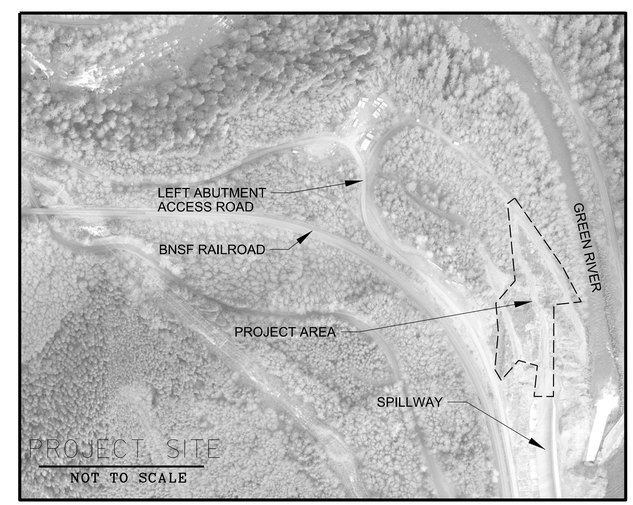

SAFETY FIRST

IF SHEET MEASURES LESS THAN 22" X 34" IT IS A REDUCED PRINT. REDUCE SCALE ACCORDINGLY.

US Army Corps of Engineers ®
Seattle District

File No.: 00x/000-00-00
Date: 22 AUG 2014
Solicitation No.: W911XX-00-X-0000

Recommended by: GUY L. GREEN, P.E. Chief, Design Branch — XX/2014 Date
Approved by: JOANN T. WALLS, P.E. Chief, Engineering Div. — XX/2014 Date

Submitted by: BRIAN J. STENEHJEM Project Manager — XX/2014 Date
Reviewed by: ANIL L. NISARGAND, P.E. Chief, Specs. and Tech Review — XX/2014 Date

U.S. ARMY CORPS OF ENGINEERS
SEATTLE DISTRICT
SEATTLE, WASHINGTON
Prepared by: JENNIFER L. WEST, P.E. Chief, Civil Section — XX/2014 Date

FY14 HHD LEFT ABUTMENT DRAINAGE
HOWARD HANSON DAM, WASHINGTON
COVER SHEET

SHEET IDENTIFICATION
G-001
SHEET 1 OF 13

DESIGN FILE: c:\documents and settings\g3ecdtsm\my documents\pwwork\dms77953\PN384734_HHLD-G-001CVR.dgn
DATE AND TIME PLOTTED: 8/22/2014

NOTES:

1. THE CONTRACTOR SHALL BE RESPONSIBLE FOR ALL WORK IN ACCORDANCE TO THE SPECIFICATIONS AND DRAWINGS.

2. ALL CONSTRUCTION WORK SHALL BE AT THE HOWARD HANSON DAM (HHD) THAT IS ABOUT 35 MILES EAST OF TACOMA, WASHINGTON. ACCESS TO THE DAM IS RESTRICTED. THE CONTRACTOR SHALL OBTAIN ALL TRAINING AND COMPLY WITH ALL ACCESS REQUIREMENTS BY THE CITY OF TACOMA AND THE USACE. THE PRIMARY ACCESS ROAD TO THE PROJECT SITE IS A TWO LANE GRAVEL ROAD THAT IS USED BY LOGGING TRUCKS. SNOW, ICE, AND MUD ARE COMMON IN THE WATERSHED DURING THE WINTER AND EARLY SPRING MONTHS.

OTHER REQUIREMENTS:

1. THE CONTRACTOR SHALL COMPLY WITH THE ACCESS ROUTES SHOWN ON THE DRAWINGS. THE CONTRACTOR SHALL NOT ACCESS THE WORK SITE THROUGH THE ADMINISTRATION BUILDING ENTRANCES AT ANY TIME WITHOUT APPROVAL BY THE PROJECT OPERATION MANAGER NOR SHALL THE CONTRACTOR PARK ANY VEHICLES AT THE ADMINISTRATION BUILDING.

2. RADIO COMMUNICATION ON CB'S IS MANDATORY FOR ALL VEHICLES FOR TRAVEL ALONG THE ACCESS ROAD TO THE DAM. CELL PHONE RECEPTION IS POOR TO NONEXISTENT AT THE PROJECT SITE. SATELLITE PHONES SHALL BE REQUIRED FOR COMMUNICATION WITH THE CONTRACTOR MAIN OFFICE. LANDLINE TELEPHONES AT THE HHD PROJECT OFFICE SHALL NOT BE USED BY THE CONTRACTOR EXCEPT IN THE EVENT OF AN EMERGENCY. HANDHELD RADIOS SHALL BE REQUIRED FOR COMMUNICATION BETWEEN CREWS WHILE ON SITE.

3. THE USACE AND CITY OF TACOMA SHALL IDENTIFY A SUITABLE LAY-DOWN, WORK SUPPORT, AND STAGING AREA FOR THE CONTRACTOR AS CLOSE AS POSSIBLE TO THE PROJECT SITE. SECURITY NEEDS ARE MINIMAL AS THE STAGING SITES ARE IN A RESTRICTED ACCESS WATERSHED. STAGING AREA PREPARATION, SUCH AS LEVELING AND GRADING SHALL BE PERFORMED BY THE CONTRACTOR PRIOR TO STAGING OF EQUIPMENT OR MATERIALS. THE STAGING SITE SHALL BE USED BY THE CONTRACTOR AND THE USACE PERSONNEL ASSIGNED TO OVERSEE THE PROPOSED WORK.USACE USAGE WOULD TYPICALLY BE ONE PERSON AND ONE VEHICLE.

4. THE CONTRACTOR SHALL PROVIDE AN OFFICE TRAILER FOR THE WORK CREWS. DUE TO NARROW ROADS AND LIMITED TURNING RADII, MORE THAN ONE MEDIUM TO SMALL TRAILER MAY BE REQUIRED IN LIEU OF A SINGLE LARGE OFFICE TRAILER. TRAILER SPACE MAY BE AVAILABLE AT THE 3-1/2 MILE MARKER SITE. CONTRACTOR SHALL COORDINATE WITH USACE, CITY OF TACOMA AND OTHER ON-SITE CONTRACTORS FOR AVAILABLE TRAILER SITES.

5. DUE TO SITE CONSTRAINTS, PARKING SPACE IS LIMITED. DESIGNATED PARKING AREAS NEAR THE WORK SITE SHALL BE RESTRICTED TO NECESSARY VEHICLES ONLY. PARKING IS AVAILABLE AT THE TACOMA HEADWORKS LOT FOR PERSONAL AND NON-ESSENTIAL VEHICLES.

6. THE CONTRACTORS SHALL NOT BLOCK ANY EXISTNG GATES OR ACCESS WITHOUT COORDINATING WITH THE USACE PROJECT OPERATION MANAGER. ROAD BLOCKAGES SHALL BE MINIMIZED TO REDUCE DISRUPTION TO DAM OPERATIONS AND OTHER CONSTRUCTION PROJECTS AROUND THE DAM. AT LEAST ONE ACCESS ROAD ACROSS THE DAM SHALL REMAIN OPEN AT ALL TIMES.

7. BASIC FIRE-FIGHTING AND SUPPRESSION EQUIPMENT IS REQUIRED FOR WORK IN FOREST AREAS.

8. THE CONTRACTOR SHALL PROVIDE ALL UTILITIES AND COMMUNICATIONS FOR THEIR USE. POWER AND POTABLE WATER ARE NOT AVAILABLE IN THE WATERSHED OUTSIDE OF THE HHD PROJECT OFFICE. FOR THE CONTRACTOR LAY-DOWN AREA, PORTABLE GENERATORS SHALL BE REQUIRED FOR POWER. POTABLE WATER SHALL BE TRANSPORTED AND STORED AT THE SITE FOR CREWS. COVERED STORAGE SHALL NOT BE AVAILABLE. THE CONTRACTOR SHALL PROVIDE ALL COVERED STORAGE AT THE SITE, AS REQUIRED, TO PROTECT MATERIALS AND SUPPLIES FROM THE WEATHER.

9. THE CONTRACTOR SHALL PROVIDE PORTABLE SANITARY ACCOMMODATIONS FOR EMPLOYEES AND USACE PERSONNEL ASSIGNED TO THE WORK SITES AS MAY BE NECESSARY, BASED ON NUMBER AND USE, AND SHALL MAINTAIN THESE ACCOMMODATIONS IN A NEAT AND SANITARY CONDITION. THE ACCOMMODATIONS SHALL COMPLY WITH REQUIREMENTS AND REGULATIONS OF EM 385-1-1, STATE HEALTH DEPARTMENT, LOCAL ORDINANCES, AND OTHER AUTHORITIES HAVING JURISDICTION. PORTABLE SANITATION UNITS SHALL BE EQUIPPED WITH HAND WASH, DISPOSABLE TOWELS, AND TRASH RECEPTACLES. ALL UNITS SHALL BE CLEANED AND RECONSTITUTED AT LEAST ONCE A WEEK, OR MORE FREQUENTLY, IF REQUIRED.

10. THE CONTRACTOR SHALL PROVIDE TRASH RECEPTACLES THAT ARE ANIMAL PROOF FOR COUGARS AND BEARS. TRASH SHALL BE REMOVED FROM THE SITE AT LEAST ONCE A WEEK. TRASH SHALL BE REMOVED FROM ALL DRILL OR WORK SITES AT THE END OF EACH SHIFT AND DISPOSED OF.

11. THE CONTRACTOR SHALL BE REQUIRED TO OBTAIN WATER FROM AN APPROVED SOURCE FOR ALL CONCRETE WORK. THE HHD WATER SUPPLY WELL SHALL NOT BE USED. WATER MAY BE PUMPED DIRECTLY FROM THE RESERVOIR WITH PROPER BACKFLOW PROTECTION.

12. ALL EQUIPMENT USED AT THE SITE SHALL HAVE APPROPRIATE MEANS OF SEDIMENT AND OIL CONTAINMENT FOR WORK NEAR THE RESERVOIR AND IN THE WATERSHED.

13. HHD IS A MUNICIPAL WATER SUPPLY WATERSHED. THE CONTRACTOR SHALL ENSURE THAT APPROPRIATE MEASURES ARE TAKEN TO PREVENT SPILLED FLUIDS AND FUELS FROM ENTERING THE SUBSURFACE. SPILL CONTROL MATERIALS WILL BE ON SITE AT ALL TIMES TO CLEAN UP ANY SPILL THAT DOES OCCUR. CONTRACTOR SHALL BE RESPONSIBLE FOR REMOVING ALL SPILLED MATERIALS AND CLEANUP MATERIALS OFF SITE IN A TIMELY MANNER. THE CONTRACTOR SHALL TAKE ALL PRECAUTIONS TO PREVENT ANY DRILL RETURN WATER FROM ENTERING THE RESERVOIR.

14. DUST CONTROL SHALL BE PERFORMED IN ACCORDANCE WITH SECTION 015717 DUST CONTROL.

SITE RESTORATION:

1. AFTER COMPLETION OF THE WORK, TOOLS, APPLIANCES, SURPLUS MATERIALS, TEMPORARY DRAINAGE, RUBBISH, AND DEBRIS INCIDENTAL TO WORK SHALL BE REMOVED AND DISPOSED OF BY THE CONTRACTOR. ALL ROAD SURFACES SHALL BE GRADED TO REMOVE RUTS AND DEBRIS. SITE CLEAN UP SHALL BE TO THE REQUIREMENTS OF THE CITY OF TACOMA, AND TO THE SATISFACTION OF THE PROJECT OPERATIONS MANAGER. UTILITIES, STRUCTURES, ROADS, FENCES, OR ANY OTHER PRE-EXISTING ITEM THAT IS DAMAGED DUE TO THE CONTRACTOR'S NEGLIGENCE WILL BE REPAIRED OR REPLACED PRIOR TO COMPLETION OF THIS CONTRACT.

2. TEMPORARY CONSTRUCTION ACCESS ROADS SHALL BE STRIPPED OF ANY ROCK OR OTHER SURFACING MATERIALS, SCARIFIED, SEEDED AND ALLOWED TO REVERT TO A NATURAL CONDITION. TEMPORARY EROSION AND SEDIMENTATION CONTROL MEASURES SHALL REMAIN IN PLACE UNTIL VEGETATION IS ESTABLISHED AND SOILS ARE STABILIZED.

CIVIL NOTES:

1. MAP COMPILED FROM AERIAL LIDAR FLOWN 3 DECEMBER 2009. DATA COLLECTED AT 1000m ATM WITH NORMAL POINT SPACING OF 0.5m SUPPLEMENTED BY FIELD SURVEY QA/QC PERFORMED DECEMEBR 2009.

2. VERTICAL CONTROL BASED ON NGVD, 1929 GA ., SA., 47.

3. HORIZONTAL CONTROL BASED ON THE WASHINGTON STATE PLANE COORDINATE SYSTEM, NAD27, NORTH ZONE.

4. THE CONTRACTOR SHALL VERIFY ALL DIMENSIONS BEFORE STARTING WORK AND SHALL IMMEDIATELY NOTIFY COR OF ANY DISCREPENCIES.

5. BEFORE EXCAVATION OR TRENCHING, THE CONTRACTOR SHALL CALL 1-800-424-5555 (PUBLIC UTILITIES) AND BILL BOYLE (206) 764-6976 (LOCAL UTILITIES) TO LOCATE UNDERGROUND UTILITIES . ANY DAMAGE TO EXISTING FACILITIES SHALL BE REPAIRED BY THE CONTRACTOR AT NO COST TO THE OWNER. THE CONTRACTOR SHALL BE RESPONSIBLE FOR ANY TEMPORARY UTILITY RELOCATIONS AND RESTORATION.

6. THE HORIZONTAL AND VERTICAL LOCATIONS OF EXISTING UTILITIES, BOTH SHOWN AND NOT SHOWN, ARE APPROXIMATE. THE CONTRACTOR SHALL VERIFY THE EXACT LOCATION OF ALL UTILITIES PRIOR TO EXCAVATION TO AVOID DAMAGE AND DISTURBANCE. THE CONTRACTOR IS RESPONSIBLE FOR PROTECTING AND PRESERVING THE INTEGRITY OF ALL EXISTING UTILITIES DURING CONSTRUCTION.

7. ALL DISTANCES SHOWN ON THE DRAWING AND DESCRIBED IN THE SPECIFICATIONS SHALL BE INTERPETED TO REFER TO HORIZONTALLY AND VERTICALLY PROJECTED PLANES UNLESS OTHERWISE NOTED.

8. SITE ACCESS DURING CONSTRUCTION IS LIMITED TO STABILIZED CONSTRUCTION ENTRANCES.

9. THE CONTRACTOR SHALL BE RESPONSIBLE FOR FULL RESTORATION OF ALL EXISTING FEATURES DISTURBED DURING CONSTRUCTION TO THEIR ORIGINAL CONDITION UNLESS OTHERWISE INDICATED BY THE COR.

10. OTHER WORK ON SITE MAY BE PERFORMED BY OTHER CONTRACTORS IN CONJUCTION WITH THIS PROJECT. THE CONTRACTOR SHALL BE RESPONSIBLE FOR COORDINATING WORK WITH OTHER ON-SITE CONTRACTORS.

LIST OF ABBREVIATIONS:

APPROX	APPROXIMATE
CB	CITIZENS BAND
CONC	CONCRETE
COR	CONTRACTING OFFICE REPRESENTATIVE
Dc	DEGREE OF CURVATURE
DIA	DIAMETER
DWG	DRAWING
E	EASTING
EL	ELEVATION
ELEV	ELEVATION
EX	EXISTING
FT	FEET
HHD	HOWARD HANSON DAM
L	LENGTH
N	NORTHING
NAD	NORTH AMERICAN DATUM
NE	NORTHEAST
NGVD	NATIONAL GEODETIC VERTICAL DATUM
NW	NORTHWEST
OC	ON CENTER
PCC	PORTLAND CEMENT CONCRETE
PI	POINT OF INTERSECTION
PSI	POUNDS PER SQUARE INCH
QTY	QUANTITY
R	RADIUS
S	SLOPE
SE	SOUTHEAST
STA	STATION
SW	SOUTHWEST
T	TANGENT LENGTH
TPU	TACOMA PUBLIC UTILITIES
TYP	TYPICAL
USACE	UNITED STATES ARMY CORPS OF ENGINEERS
W	WESTING

LEGEND:

1085	CONTOUR
	CONSTRUCTION LIMITS
	CONSTRUCTION STAGING AREA
	CONSTRUCTION EASEMENT

US Army Corps of Engineers®
SEATTLE DISTRICT

MARK	DESCRIPTION	DATE	APPR.	MARK	DESCRIPTION	DATE	APPR.

U.S. ARMY CORPS OF ENGINEERS
SEATTLE DISTRICT
SEATTLE, WASHINGTON

DESIGNED BY: LAST | DWN BY: LAST | CKD BY: LAST | SUBMITTED BY: FIRST LAST | PLOT DATE: 8/22/2014 | SIZE: ANSI D | PLOT TIME: 11:17:29 AM | FILE NAME: PN384734_HHLD-G-002IND.dgn | DATE: DD MONTH 2011 | SOLICITATION NO.: X000XX-00-X-0002 | CONTRACT NO.: X000XX-00X-0000 | FILE NUMBER: E-06-G-08

FY14 HHD LEFT ABUTMENT DRAINAGE
HOWARD HANSON DAM, WASHINGTON

GENERAL NOTES,
LEGEND AND ABBREVIATIONS

SHEET IDENTIFICATION
G-002
SHEET 2 OF 12

DESIGN FILE: c:\documents and settings\g3ecdksm\my documents\pwwork\dms77953\PN384734_HHLD-G-002IND.dgn

DATE AND TIME PLOTTED: 8/22/2014

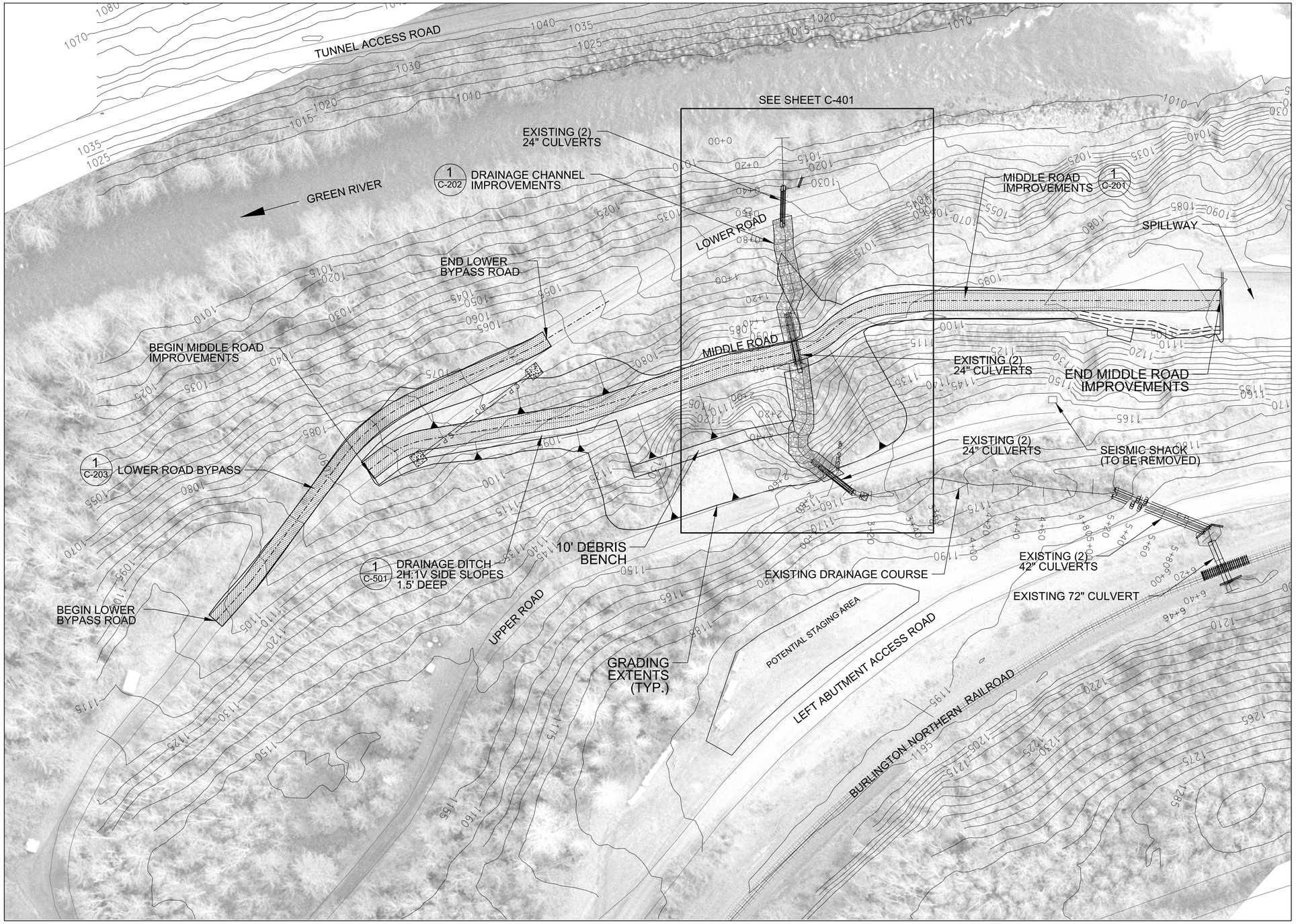

N

1 C-101 HHD LEFT BANK SITE PLAN 1"=20'

0 20' 40'

NOTES:

1. MAP COMPILED FROM FIELD SURVEY PERFORMED 26 JULY 2013. HORIZONTAL CONTROL BASED ON WASHINGTON COORD. SYSTEM, NAD 27, N. ZONE. VERTICAL CONTROL BASED ON NGVD '29.

US Army Corps of Engineers®
SEATTLE DISTRICT

MARK	DESCRIPTION	DATE	APPR.	MARK	DESCRIPTION	DATE	APPR.

DESIGNED BY: K. MAY
DWN BY: K. MAY
CKD BY: XXXX
SUBMITTED BY: B. STENENJEM
PLOT DATE: 8/25/2014
PLOT TIME: 8:34 AM
SIZE: ANSI D
FILE NAME:
DATE: 14 AUGUST 2014
SOLICITATION NO.: X000XX-00-X-0002
CONTRACT NO.: X000XX-000-0000
FILE NUMBER: E-04-048

U.S. ARMY CORPS OF ENGINEERS
SEATTLE DISTRICT
SEATTLE, WASHINGTON

FY14 HHD LEFT ABUTMENT DRAINAGE
HOWARD HANSON DAM, WASHINGTON

SITE PLAN

SHEET IDENTIFICATION
C-101
SHEET 4 OF 13

DESIGN FILE: c:\documents and settings\g3ecdksm\my documents\pwwork\dms77956\PN384734_HHLD-C-101SP1.dgn

DATE AND TIME PLOTTED: 8/25/2014

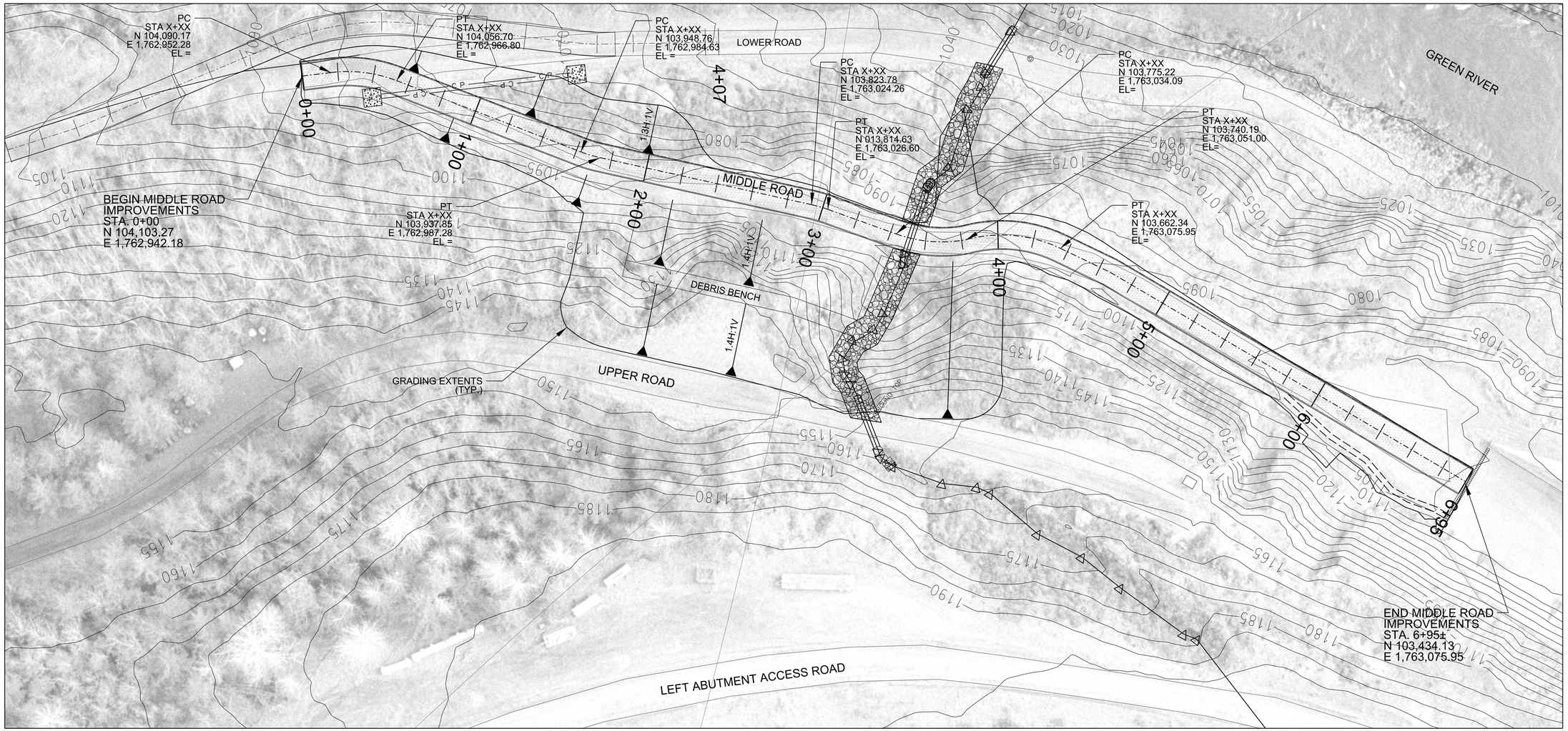

1 C-201 HHD LEFT BANK - MIDDLE ROAD PLAN
1"=30'
0 30' 60'

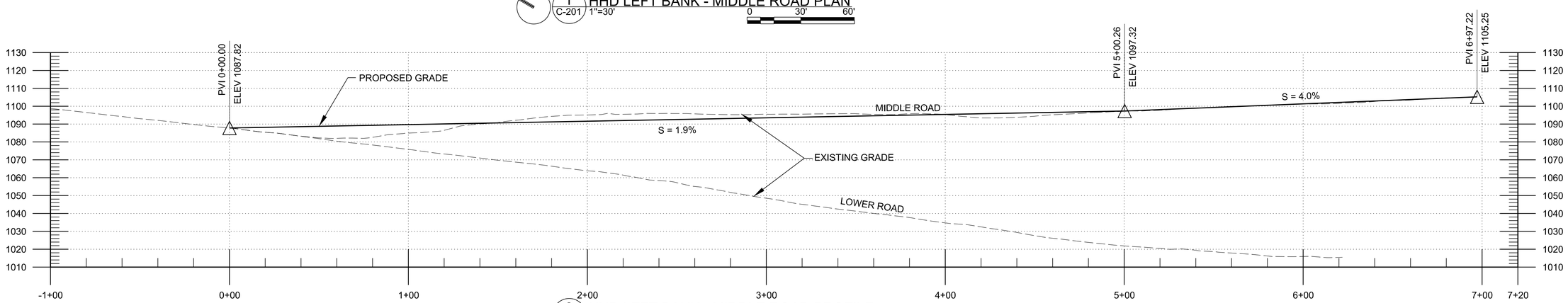

2 C-201 HHD LEFT BANK - MIDDLE ROAD PROFILE
1"=30' 1H:1V
0 40' 80'

US Army Corps of Engineers®
SEATTLE DISTRICT

MARK	DESCRIPTION	DATE	APPR.

MARK	DESCRIPTION	DATE	APPR.

U.S. ARMY CORPS OF ENGINEERS
SEATTLE DISTRICT
SEATTLE, WASHINGTON

DESIGNED BY: K. MAY
DWN BY: K. MAY
CKD BY: [illegible]
SUBMITTED BY: B. STENEHJEM
PLOT DATE: 8/25/2014
PLOT TIME: 10:59:20 AM
SIZE: ANSI D
FILE NAME:
DATE: 14 AUGUST 2014
SOLICITATION NO.: X000XX-00-X-0002
CONTRACT NO.: X000XX-00X-0000
FILE NUMBER: E-56-5-58

FY14 HHD LEFT ABUTMENT DRAINAGE
HOWARD HANSON DAM, WASHINGTON

MIDDLE ROAD
PLAN AND PROFILE

SHEET IDENTIFICATION
C-201
SHEET 5 OF 13

DESIGN FILE: c:\documents and settings\g3ecdksm\my documents\pwwork\dms77956\PN384734_HHLD-C-201PP1.dgn

DATE AND TIME PLOTTED: 8/25/2014

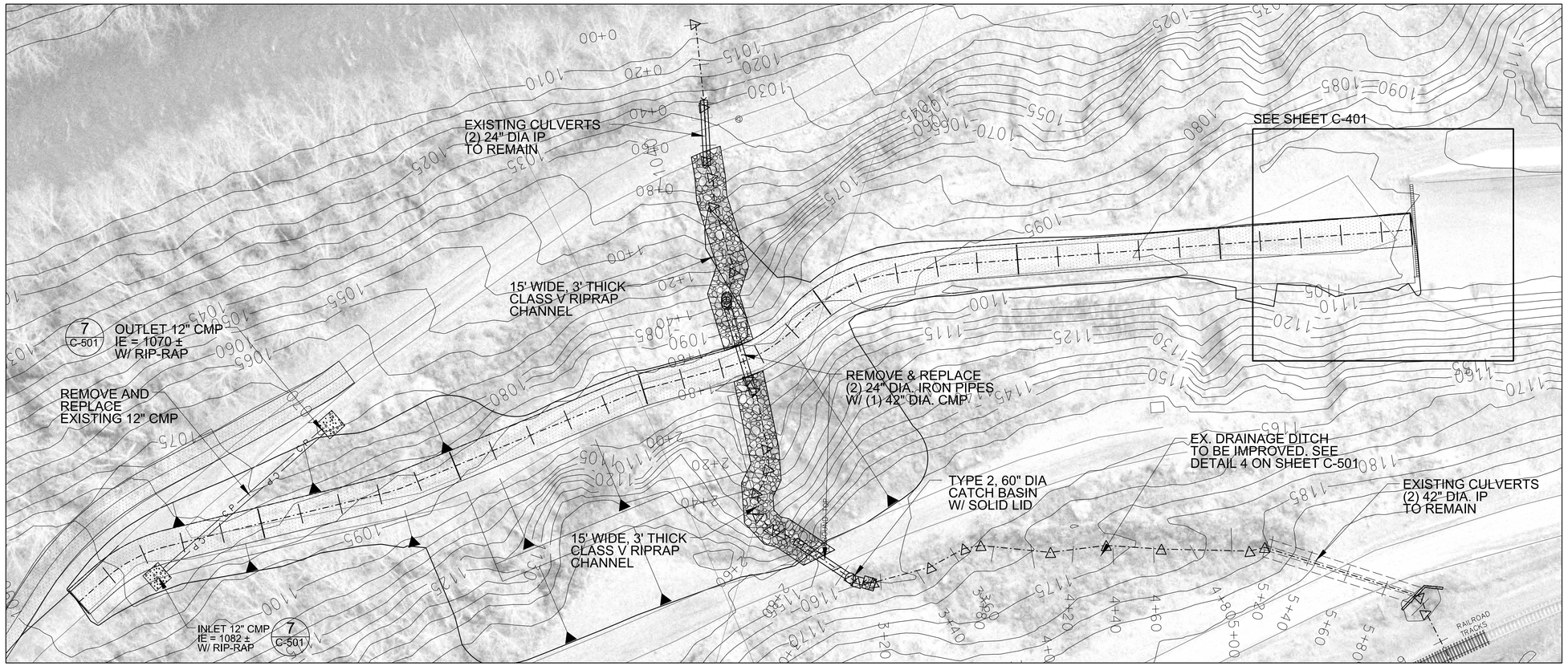

1 C-202 HHD LEFT BANK DRAINAGE PLAN 1"=30'

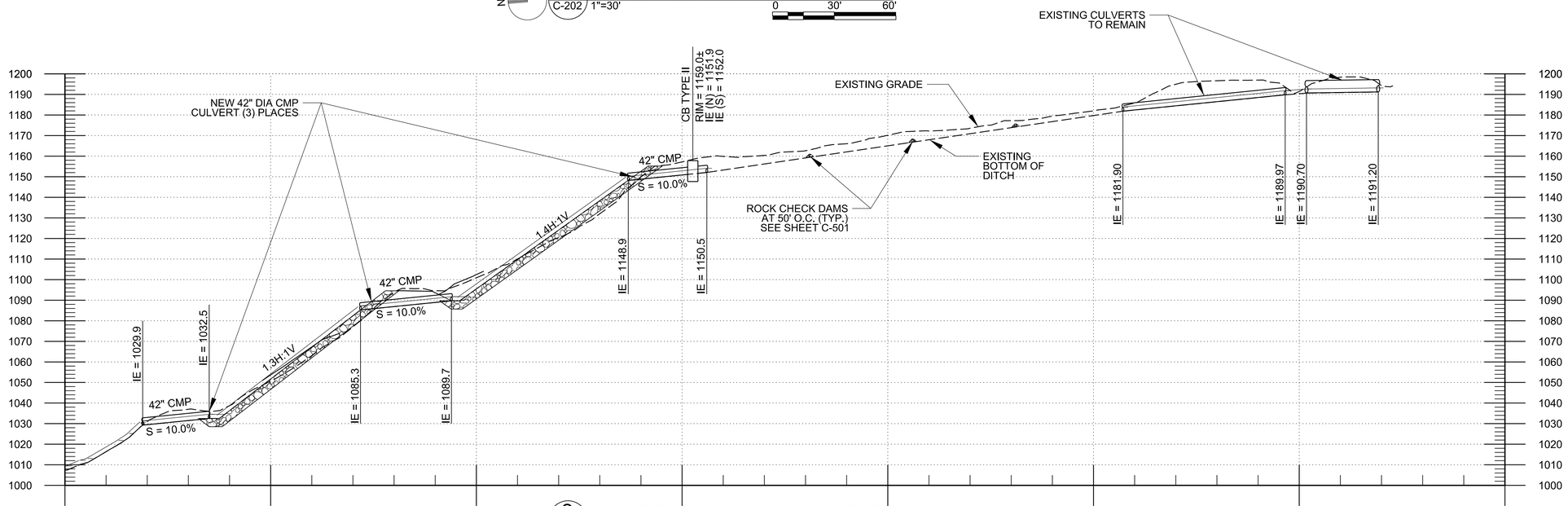

2 C-202 HHD LEFT BANK DRAINAGE PROFILE 1"=30' 1H:1V

US Army Corps of Engineers®
SEATTLE DISTRICT

MARK	DESCRIPTION	DATE	APPR.	MARK	DESCRIPTION	DATE	APPR.

DESIGN FILE: c:\documents and settings\g3ecdksm\my documents\pwwork\dms77956\PN384734_HHLD-C-202PP2.dgn

DATE AND TIME PLOTTED: 8/27/2014

DESIGNED BY: K. MAY
DWN BY: K. MAY
CKD BY: XXXX
SUBMITTED BY: STENHJEM
PLOT DATE: 8/27/2014
PLOT TIME: 2:03:40 PM
SIZE: ANSI D
FILE NAME:
DATE: 13 AUGUST 2014
SOLICITATION NO.: X000XX-00-X-0002
CONTRACT NO.: X000XX-00X-0000
FILE NUMBER: E-56-5-58

U.S. ARMY CORPS OF ENGINEERS
SEATTLE DISTRICT
SEATTLE, WASHINGTON

FY14 HHD LEFT ABUTMENT DRAINAGE
HOWARD HANSON DAM, WASHINGTON

DRAINAGE PLAN AND PROFILE

SHEET IDENTIFICATION
C-202
SHEET 6 OF 13

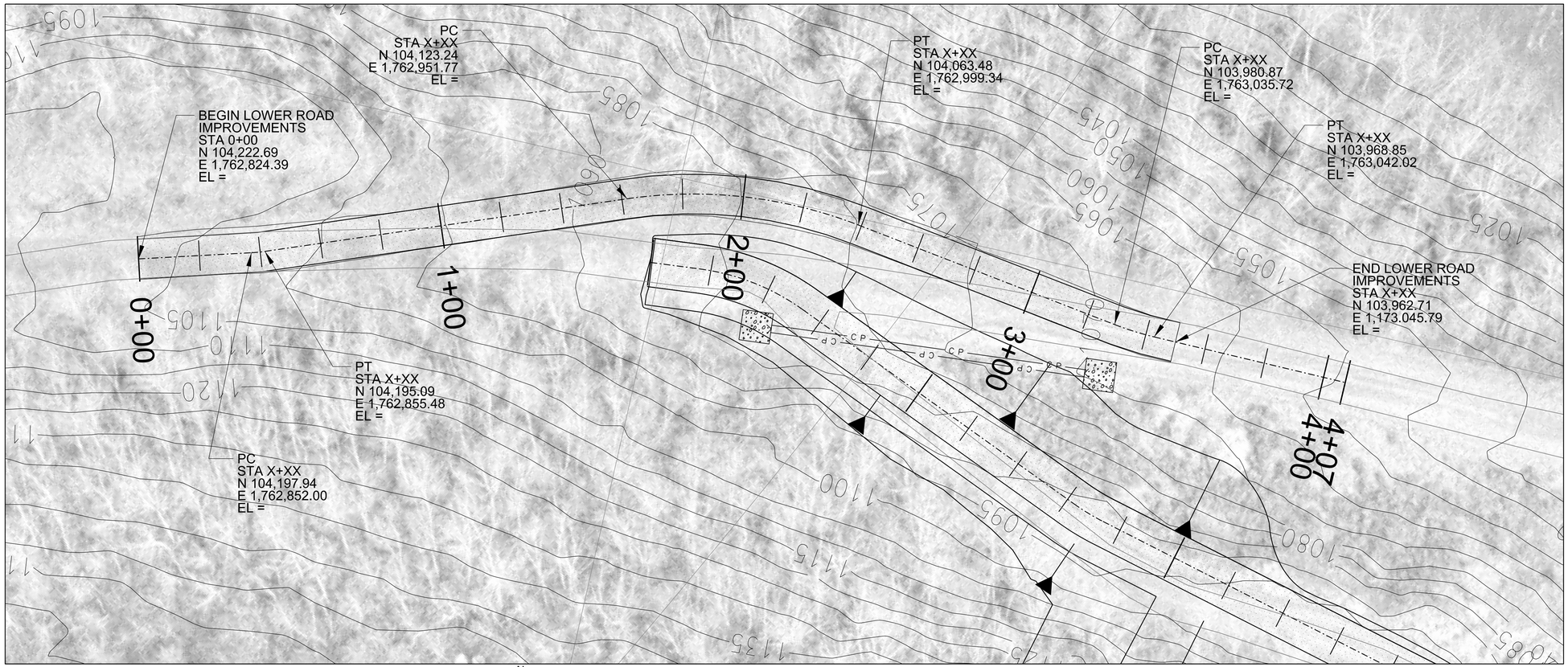

1 C-203 LOWER ROAD PLAN 1"=20'

0 20' 40'

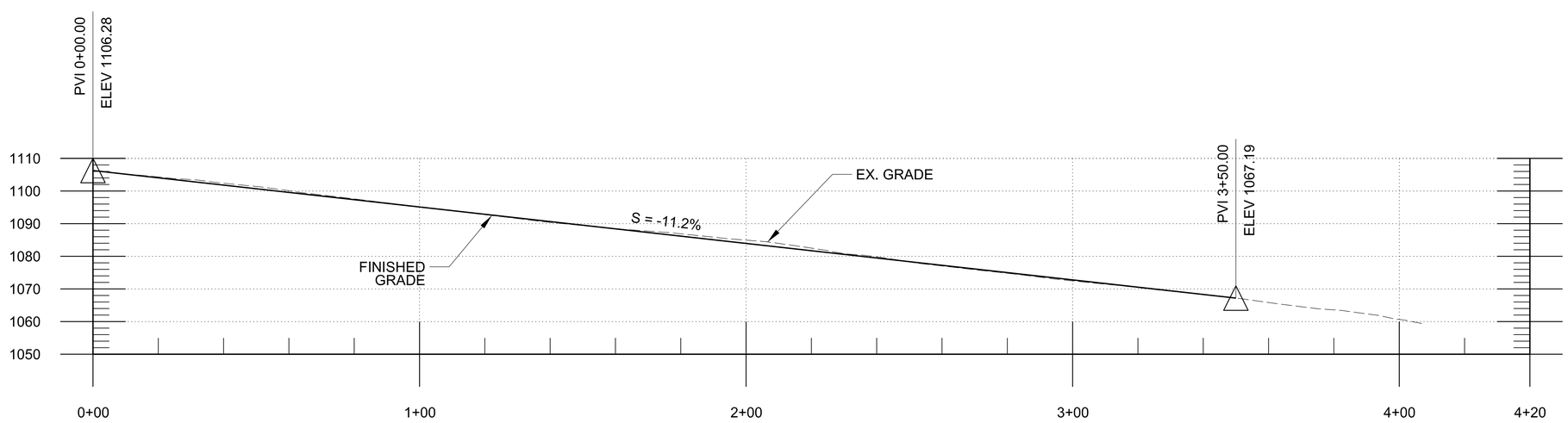

2 C-203 LOWER ROAD PROFILE 1"=20' 1H:1V

0 20' 40'

US Army Corps of Engineers®
SEATTLE DISTRICT

MARK	DESCRIPTION	DATE	APPR.	MARK	DESCRIPTION	DATE	APPR.

DESIGN FILE: c:\documents and settings\g3ecdksm\my documents\pwwork\dms77956\PN384734_HHLD-C-203PP3.dgn

DATE AND TIME PLOTTED: 8/25/2014

DESIGNED BY: K. MAY
DWN BY: K. MAY
CKD BY: XXXX
SUBMITTED BY: B. STENEHJEM
PLOT DATE: 8/25/2014
PLOT TIME: 3:42:25 PM
SIZE: ANSI D
FILE NAME:
DATE: 14 AUGUST 2014
SOLICITATION NO.: X000XX-00-X-0002
CONTRACT NO.: X000XX-00X-0000
FILE NUMBER: E-56-5-58

U.S. ARMY CORPS OF ENGINEERS
SEATTLE DISTRICT
SEATTLE, WASHINGTON

FY14 HHD LEFT ABUTMENT DRAINAGE
HOWARD HANSON DAM, WASHINGTON

LOWER ROAD PLAN AND PROFILE

SHEET IDENTIFICATION
C-203
SHEET 7 OF 13

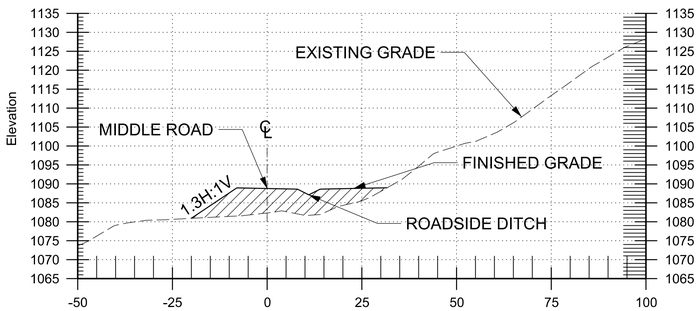

0+50

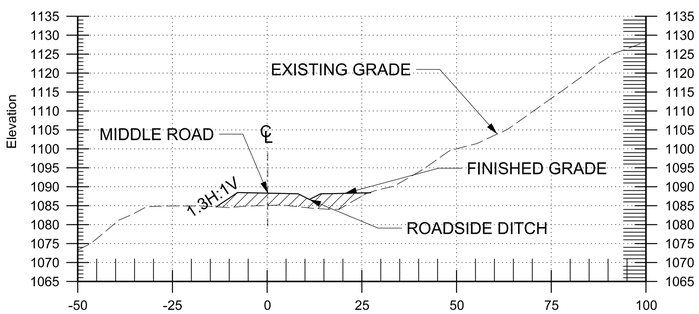

0+25

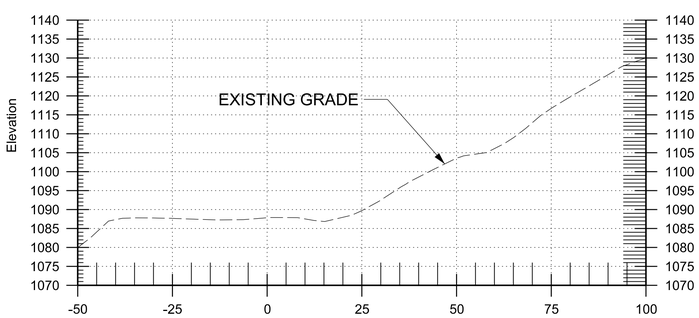

0+00

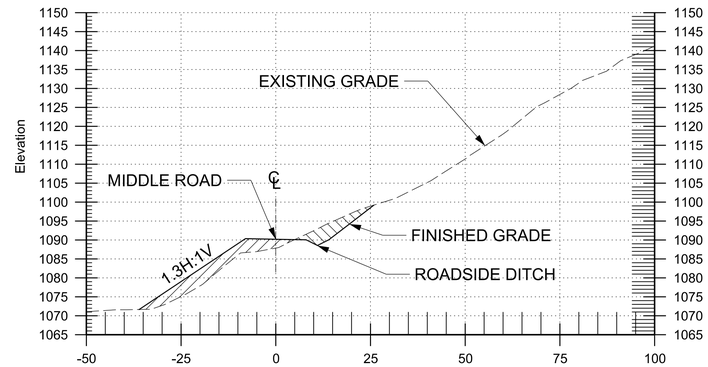

1+25 1 C-501

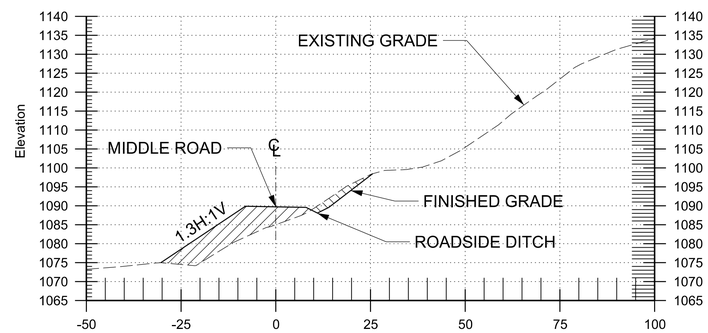

1+00

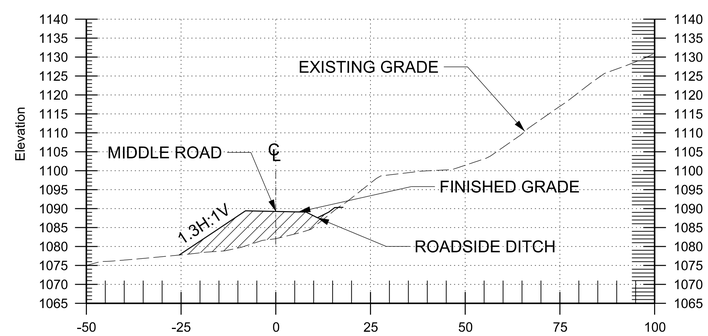

0+75

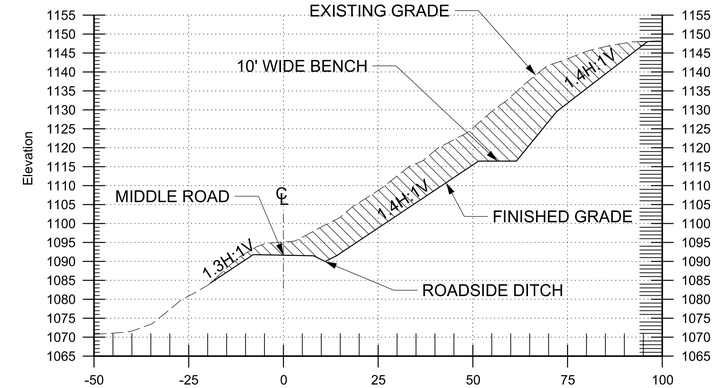

2+00 2 C-501

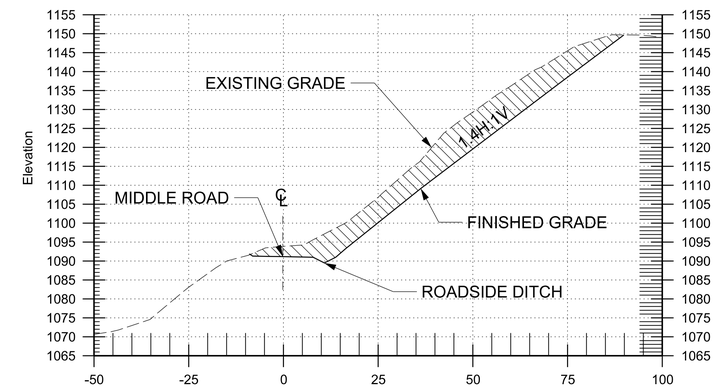

1+75

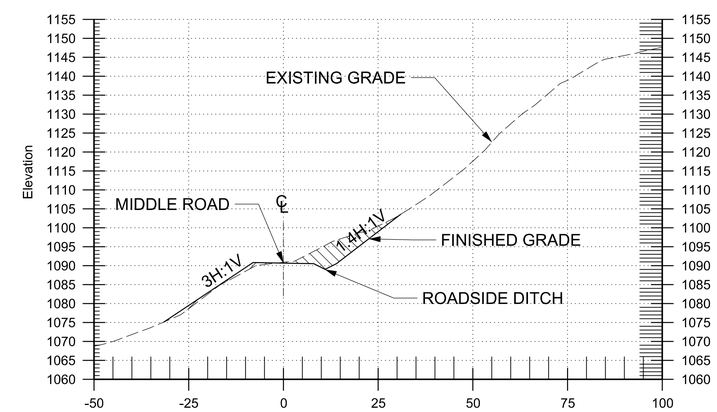

1+50

1 C-301 HHD LEFT BANK MIDDLE ROAD SECTIONS 1
1"=20'
0 20' 40'

US Army Corps of Engineers®
SEATTLE DISTRICT

MARK	DESCRIPTION	DATE	APPR.

MARK	DESCRIPTION	DATE	APPR.

U.S. ARMY CORPS OF ENGINEERS
SEATTLE DISTRICT
SEATTLE, WASHINGTON

DESIGNED BY: K. MAY
DWN BY: K. MAY
CKD BY: XXXXX
SUBMITTED BY: B. STENEHJEM
PLOT DATE: 8/27/2014
SIZE: ANSI D
DATE: 14 AUGUST 2014
SOLICITATION NO.: X000XX-00-X-0002
CONTRACT NO.: X000XX-00X-0000
PLOT TIME: 12:37:25 PM
FILE NAME:
FILE NUMBER: E-56-5-58

FY14 HHD LEFT ABUTMENT DRAINAGE
HOWARD HANSON DAM, WASHINGTON

MIDDLE ROAD SECTIONS 1
(STA. 0+00 TO 2+00)

SHEET IDENTIFICATION
C-301
SHEET 8 OF 13

DESIGN FILE: c:\documents and settings\g3ecdksm\my documents\pwwork\dms77956\PN384734_HHLD-C-301SC1.dgn

DATE AND TIME PLOTTED: 8/27/2014

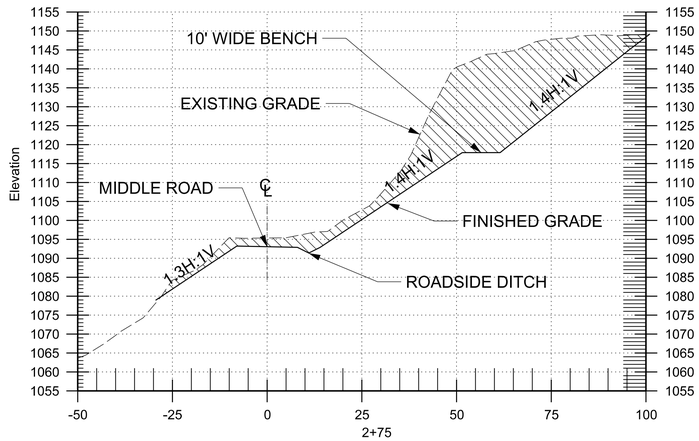

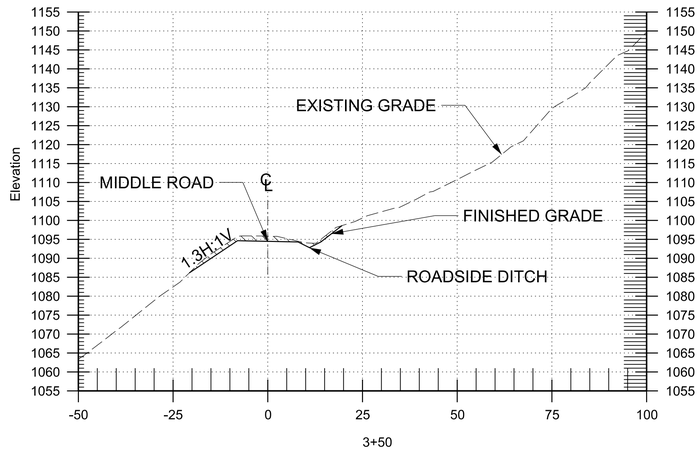

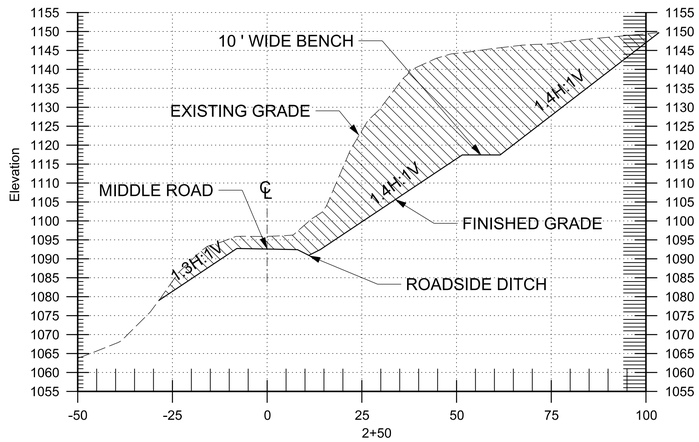

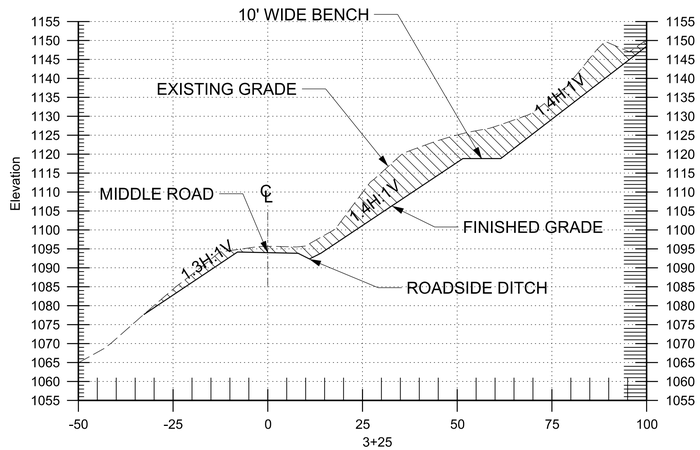

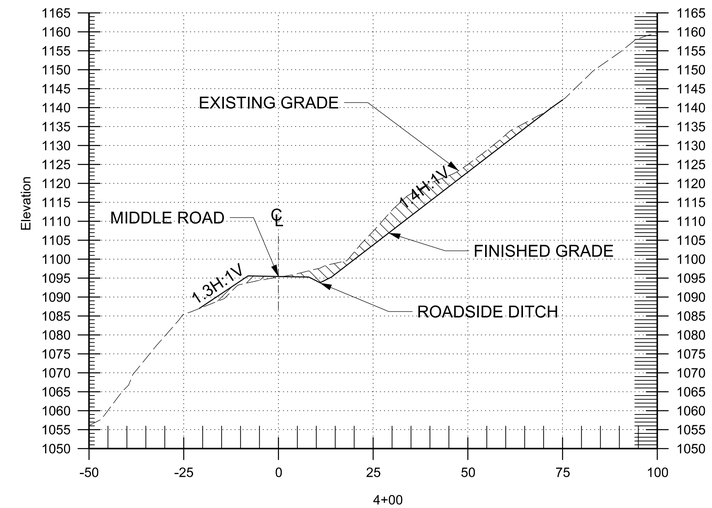

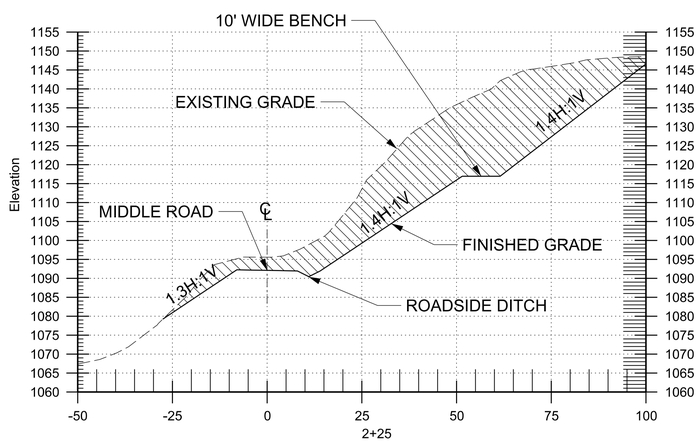

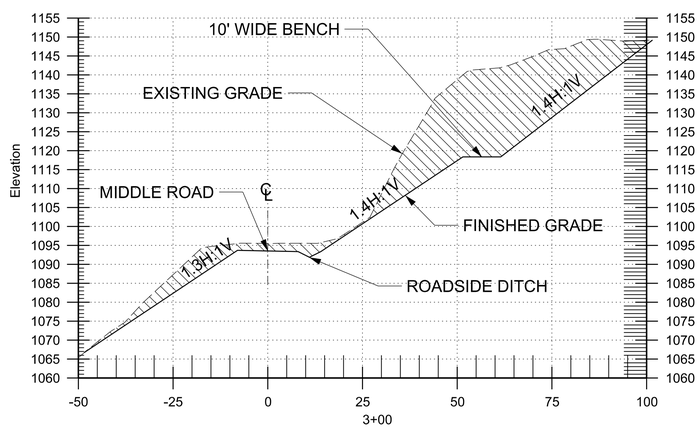

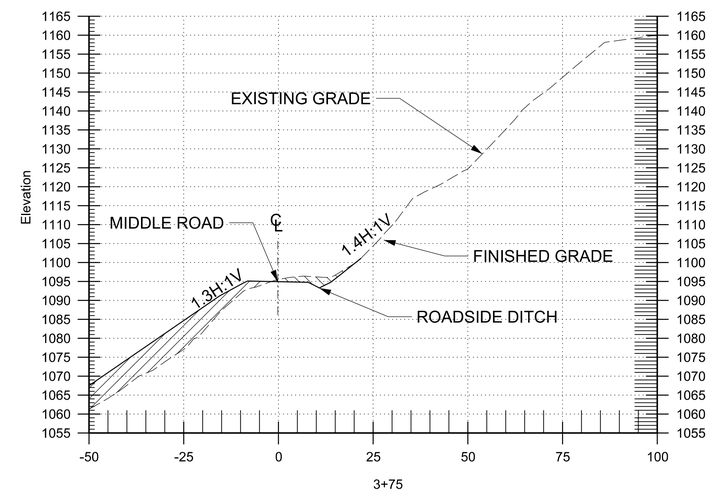

1 HHD LEFT BANK MIDDLE ROAD SECTIONS 2
C-302 1"=20' 1H:1V 0 20' 40'

US Army Corps of Engineers®
SEATTLE DISTRICT

MARK	DESCRIPTION	DATE	APPR.	MARK	DESCRIPTION	DATE	APPR.

U.S. ARMY CORPS OF ENGINEERS
SEATTLE DISTRICT
SEATTLE, WASHINGTON

DESIGNED BY: K. MAY
DWN BY: K. MAY
CKD BY: XXXX
SUBMITTED BY: B STENEHJEM
DATE: 14 AUGUST 2014
SOLICITATION NO.: X000XX-00-X-0002
CONTRACT NO.: X000XX-00X-0000
PLOT DATE: 8/27/2014
PLOT TIME: 13:39:46 PM
FILE NUMBER: E-C6-C-048
SIZE: ANSI D
FILE NAME:

FY14 HHD LEFT ABUTMENT DRAINAGE
HOWARD HANSON DAM, WASHINGTON

MIDDLE ROAD SECTIONS 2
(STA. 2+25 TO 4+00)

SHEET IDENTIFICATION
C-302
SHEET 9 OF 13

DESIGN FILE: c:\documents and settings\g3ecdksm\my documents\pwwork\dms77956\PN384734_HHLD-C-302SC2.dgn

DATE AND TIME PLOTTED: 8/27/2014

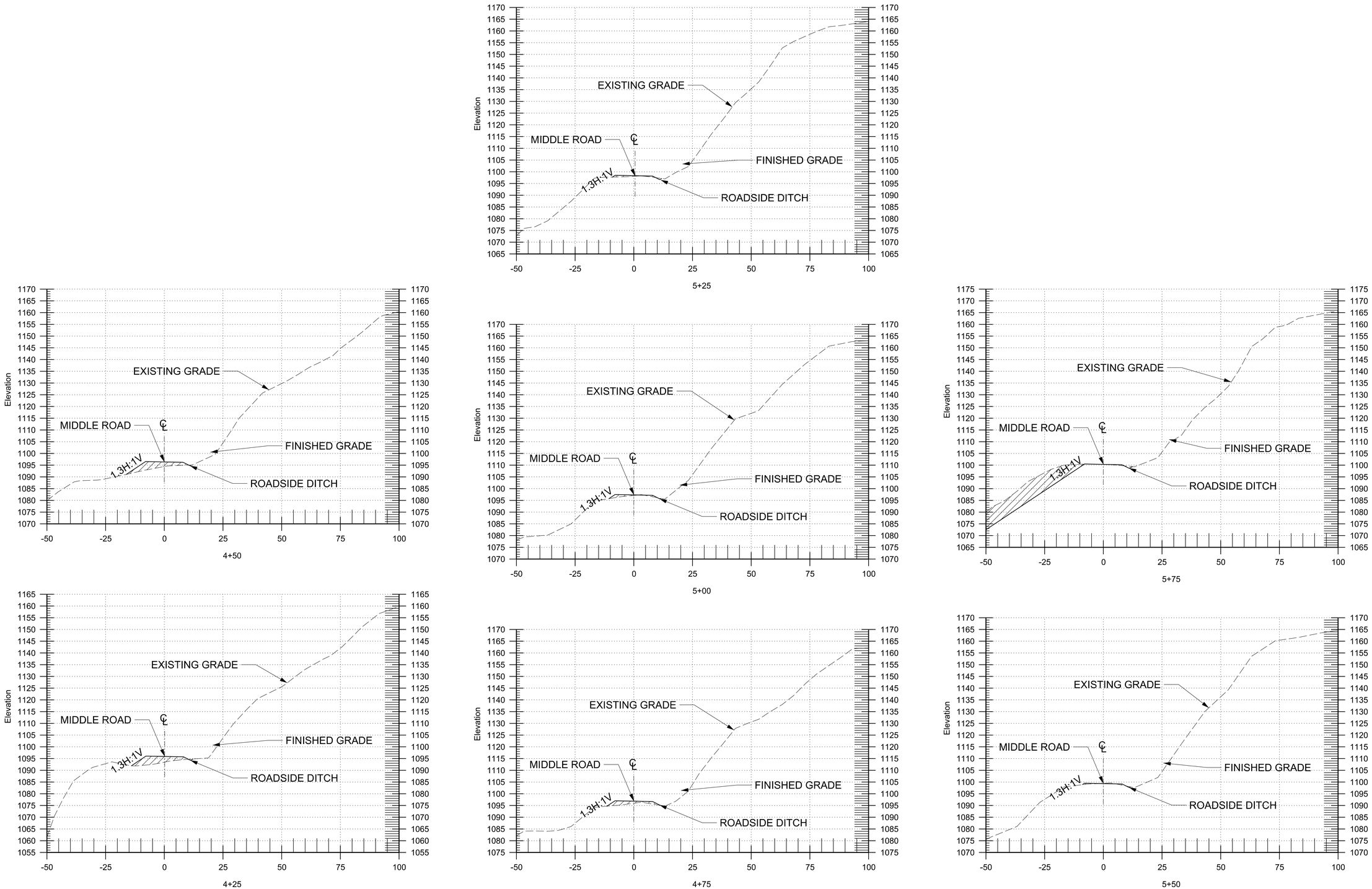

1 C-303 HHD LEFT BANK MIDDLE ROAD SECTIONS 3
1"=20' 1H:1V
0 20' 40'

US Army Corps of Engineers®
SEATTLE DISTRICT

MARK	DESCRIPTION	DATE	APPR.

MARK	DESCRIPTION	DATE	APPR.

U.S. ARMY CORPS OF ENGINEERS
SEATTLE DISTRICT
SEATTLE, WASHINGTON

DESIGNED BY: K. MAY
DWN BY: K. MAY
CKD BY: XXXX
SUBMITTED BY: B. STENEHJEM
PLOT DATE: 8/27/2014
SIZE: ANSI D
PLOT TIME: 12:41:24 PM
FILE NAME:
DATE: 14 AUGUST 2014
SOLICITATION NO.: X000XX-00-X-0002
CONTRACT NO.: X000XX-00X-0000
FILE NUMBER: E-56-5-58

FY14 HHD LEFT ABUTMENT DRAINAGE
HOWARD HANSON DAM, WASHINGTON

MIDDLE ROAD SECTIONS 3
(STA. 4+25 TO 5+75)

SHEET IDENTIFICATION
C-303
SHEET 10 OF 13

DESIGN FILE: c:\documents and settings\g3ecdksm\my documents\pwwork\dms77956\PN384734_HHLD-C-303SC3.dgn

DATE AND TIME PLOTTED: 8/27/2014

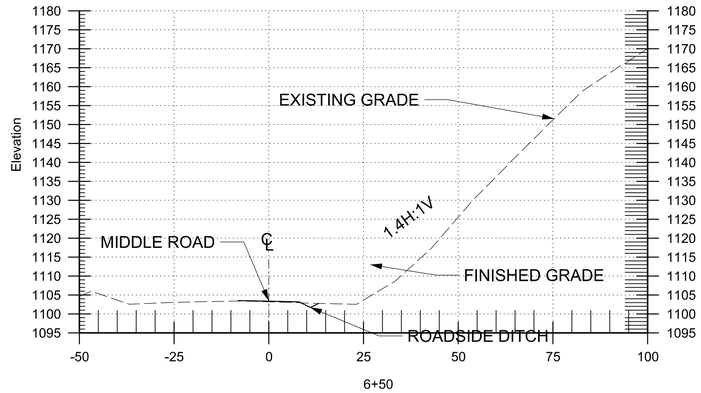

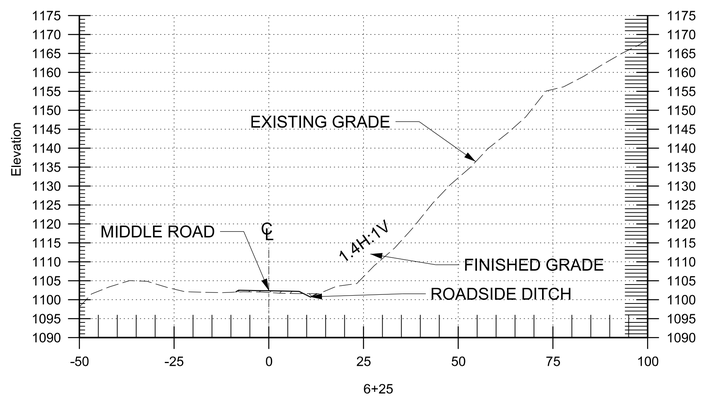

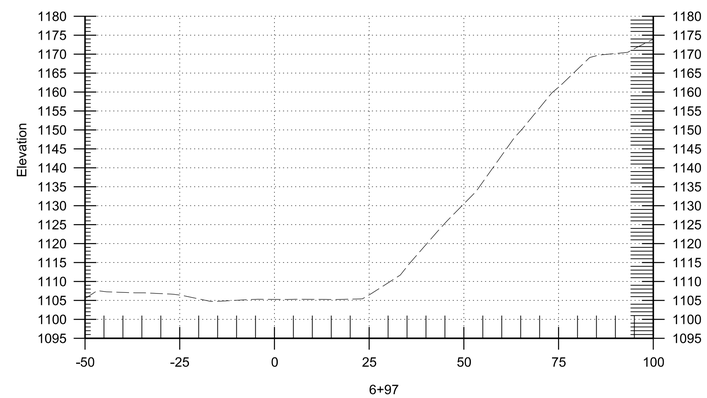

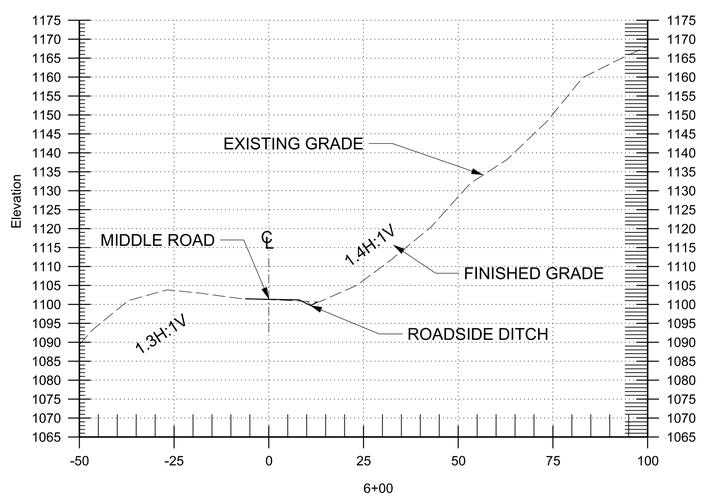

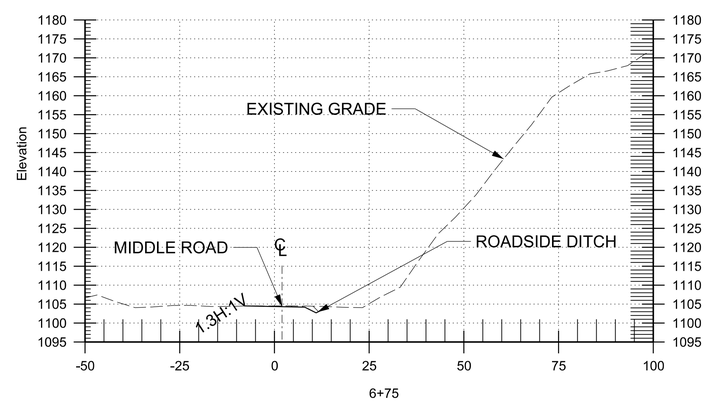

1 C-304 HHD LEFT BANK MIDDLE ROAD SECTIONS 4
1"=20' 1H:1V
0 20' 40'

US Army Corps of Engineers®
SEATTLE DISTRICT

MARK	DESCRIPTION	DATE	APPR.

MARK	DESCRIPTION	DATE	APPR.

U.S. ARMY CORPS OF ENGINEERS
SEATTLE DISTRICT
SEATTLE, WASHINGTON

DESIGNED BY: K. MAY
DWN BY: K. MAY
CKD BY: XXX
SUBMITTED BY: B. STENEHJEM
PLOT DATE: 8/27/2014
PLOT TIME: 12:43:41 PM
SIZE: ANSI D
FILE NAME:
DATE: 14 AUGUST 2014
SOLICITATION NO.: X000XX-00-X-0002
CONTRACT NO.: X000XX-00X-0000
FILE NUMBER: E-56-5-58

FY14 HHD LEFT ABUTMENT DRAINAGE
HOWARD HANSON DAM, WASHINGTON

MIDDLE ROAD SECTIONS 4
(STA. 6+00 TO 6+97)

SHEET IDENTIFICATION
C-304
SHEET 11 OF 13

DESIGN FILE: c:\documents and settings\g3ecdksm\my documents\pwwork\dms77956\PN384734_HHLD-C-304SC4.dgn

DATE AND TIME PLOTTED: 8/27/2014

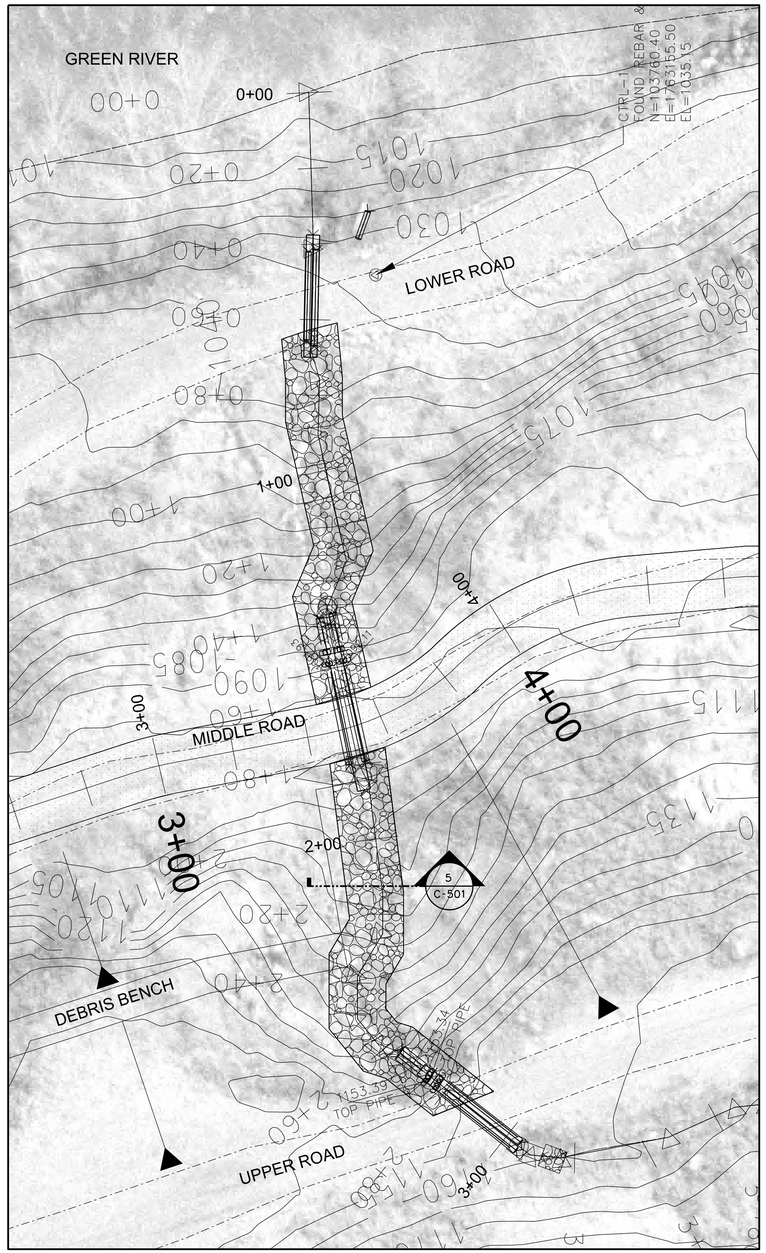

N

1 C-401 ENLARGED DRAINAGE PLAN 1
1"=20'
0 20' 40'

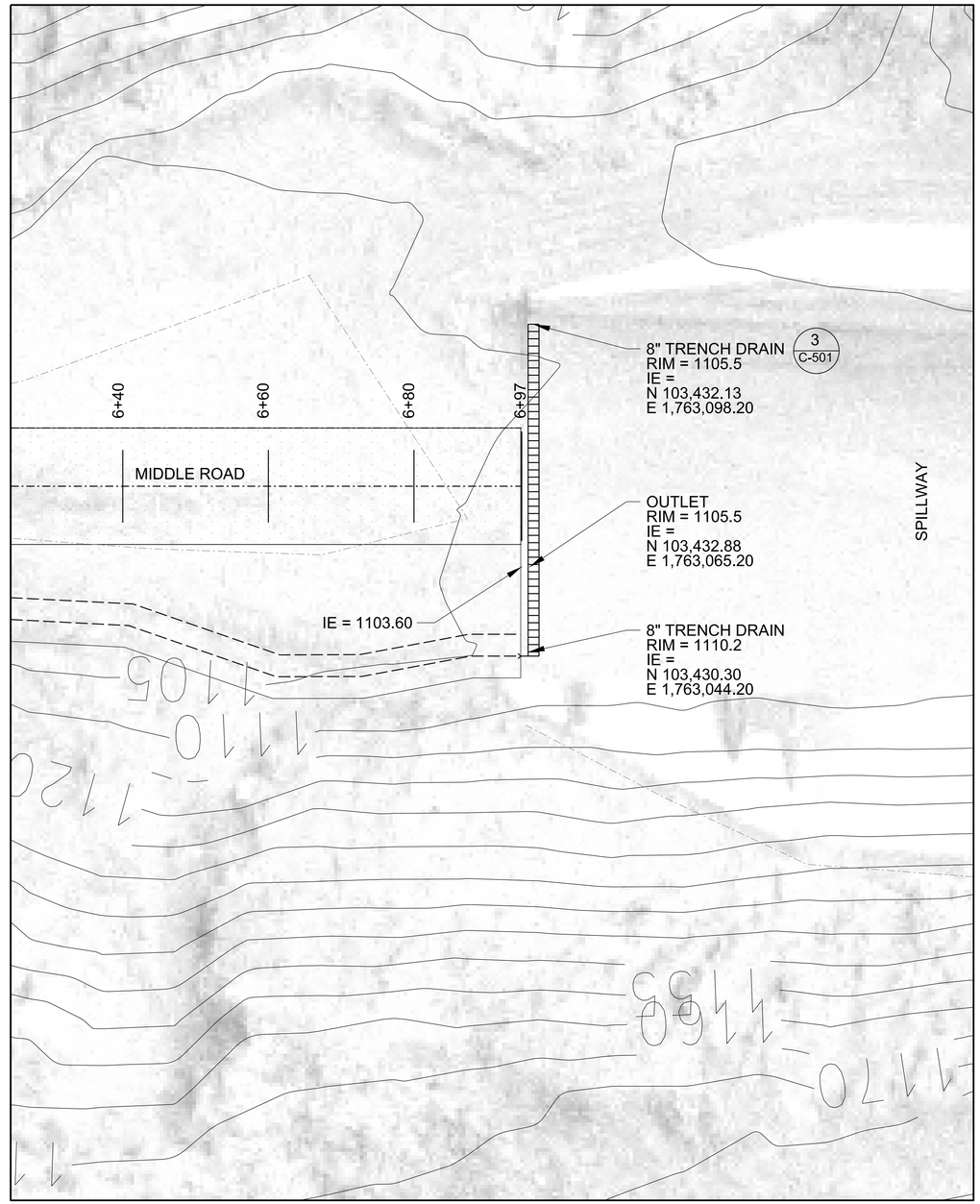

N

2 C-401 ENLARGED DRAINAGE PLAN 2
1"=10'
0 10' 20'

NOTES:

1. 8" TRENCH DRAIN AT SPILLWAY OUTLET DRAINS TO ROADSIDE DITCH.
2. TRENCH DRAIN RIM SHALL BE FLUSH WITH EXISTING GRADE THE ENTIRE LENGTH.

US Army Corps of Engineers®
SEATTLE DISTRICT

MARK	DESCRIPTION	DATE	APPR.

MARK	DESCRIPTION	DATE	APPR.

U.S. ARMY CORPS OF ENGINEERS
SEATTLE DISTRICT
SEATTLE, WASHINGTON

DESIGNED BY: K. MAY
DWN BY: K. MAY
CKD BY: XXXX
SUBMITTED BY: B. STENEHJEM
PLOT DATE: 8/27/2014
PLOT TIME: 12:50:39 PM
SIZE: ANSI D
FILE NAME:
DATE: 14 AUGUST 2014
SOLICITATION NO.: X000XX-00-X-0002
CONTRACT NO.: X000XX-00X-0000
FILE NUMBER: E-56-5-58

FY14 HHD LEFT ABUTMENT DRAINAGE
HOWARD HANSON DAM, WASHINGTON

ENLARGED DRAINAGE PLAN

SHEET IDENTIFICATION
C-401
SHEET 12 OF 13

DESIGN FILE: c:\documents and settings\g3ecdksm\my documents\pwwork\dms77956\PN384734_HHLD-C-401EDP.dgn

DATE AND TIME PLOTTED: 8/27/2014

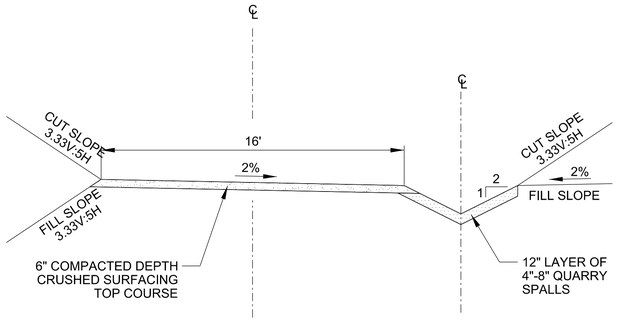

1 MIDDLE ROAD SECTION
NTS

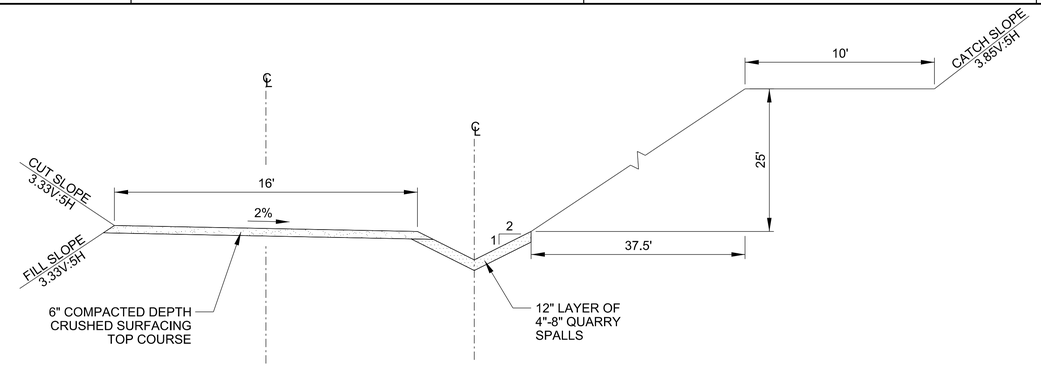

2 MIDDLE ROAD SECTION WITH BENCH
NTS

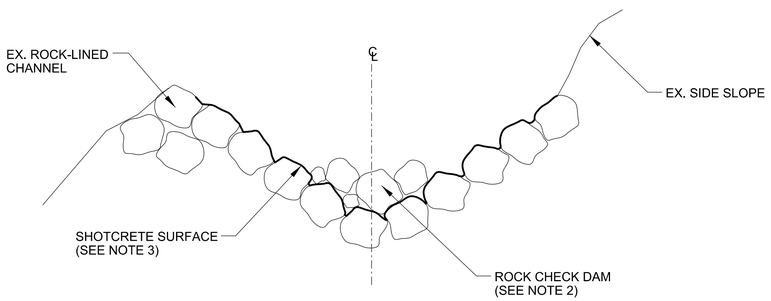

NOTES:

1. REMOVE VEGETATION FROM EXISTING DRAINAGE CHANNEL.
2. CONSTRUCT ROCK CHECK DAMS AT 50' INTERVALS.
3. SHOTCRETE CHANNEL BOTTOM AND SIDES.

4 V-SHAPED DITCH
NTS

3 TRENCH DRAIN
NTS

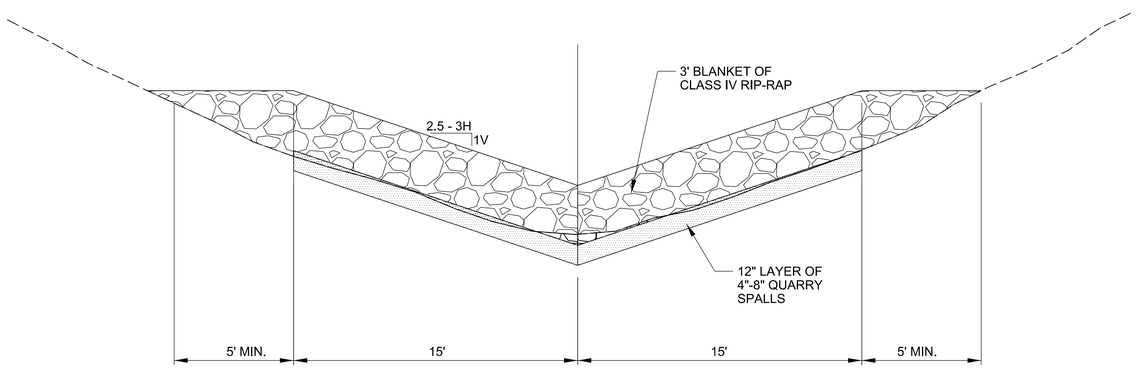

5 DRAINAGE CHANNEL ARMORING
NTS

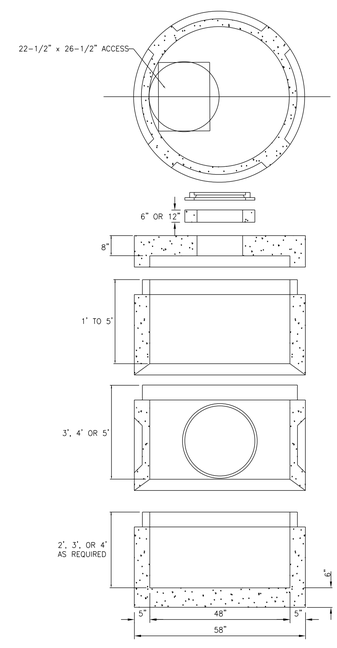

TYPE 2 CATCH BASIN

ALL UNITS ARE MANUFACTURED TO MEET THE REQUIREMENTS OF THE DEPARTMENT OF TRANSPORTATION AND APWA STANDARD PLAN.

SLAB TOP.
8 INCHES THICK. ROUNDED OR RECTANGULAR OPENINGS ARE PROVIDED WHERE NEEDED.

PRECAST SECTIONS.
UNITS ARE AVAILABLE IN VARIOUS HEIGHTS STANDARD JOINTING IS BY RUBBER GASGETS. STEPS ARE AVAILBLE ON REQUEST. LIFT HOLES ARE PROVIDED.

KNOCKOUTS ARE PLACED FOR 15" PIPE STRAIGHT THROUGH AND OR 21" PIPE STRAIGHT THROUGH.

BASE SECTIONS.
THE BASE SECTIONS ARE AVAILABLE IN 2 FOOT OR 5 FOOT HEIGHTS. THE 5' BASE HAS 4 KNOCKOUTS, FOR 21" AND 18" PIPE.

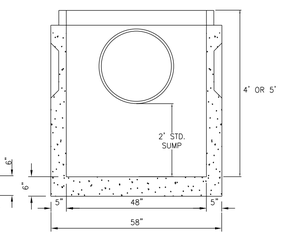

4 STORM DRAIN MANHOLE
NTS

US Army Corps of Engineers®
SEATTLE DISTRICT

MARK	DESCRIPTION	DATE	APPR.

MARK	DESCRIPTION	DATE	APPR.

U.S. ARMY CORPS OF ENGINEERS
SEATTLE DISTRICT
SEATTLE, WASHINGTON

DESIGNED BY: K. MAY
DWN BY: K. MAY
CKD BY:
SUBMITTED BY: B. STEINEHJEM
PLOT DATE: 8/27/2014
SIZE: ANSI D
DATE:
DATE:
SOLICITATION NO.: X000XX-00-X-0002
CONTRACT NO.: X000XX-00X-0000
FILE NUMBER: E-56-5-58
PLOT TIME: 1:58:44 PM
FILE NAME:

FY14 HHD LEFT ABUTMENT DRAINAGE
HOWARD HANSON DAM, WASHINGTON

MISC DETAILS

SHEET IDENTIFICATION
C-501
SHEET 13 OF 13

DESIGN FILE: c:\documents and settings\g3ecdksm\my documents\pwwork\dms77956\PN384734_HHLD-C-501DT1.dgn

DATE AND TIME PLOTTED: 8/27/2014

95% Design Documentation Report

Left Bank Drainage Project

Howard Hanson Dam

Green River, Washington

August 2014

Prepared by

US Army Corps of Engineers®
Seattle District

SECTION 03 37 13

SHOTCRETE
11/09

PART 1 GENERAL

1.1 UNIT PRICES

1.1.1 Shotcrete

1.1.1.1 Payment

Payment will be made for all costs associated with furnishing, delivering, and placing shotcrete.

1.1.1.2 Measurement

Shotcrete will be measured for payment based upon the quantity per cubic yard, based on a unit length shotcreted to the thickness shown on the contract drawings.

1.1.1.3 Unit of Measure

Unit of measure: cubic yard.

1.2 REFERENCES

The publications listed below form a part of this specification to the extent referenced. The publications are referred to within the text by the basic designation only.

AMERICAN CONCRETE INSTITUTE INTERNATIONAL (ACI)

ACI CP-60	(2009) Craftman Workbook for ACI Certification of Shotcrete Nozzleman

ASTM INTERNATIONAL (ASTM)

ASTM A820/A820M	(2011) Standard Specification for Steel Fibers for Fiber-Reinforced Concrete
ASTM C1077	(2014) Standard Practice for Laboratories Testing Concrete and Concrete Aggregates for Use in Construction and Criteria for Laboratory Evaluation
ASTM C1140/C1140M	(2011) Standard Practice for Preparing and Testing Specimens from Shotcrete Test Panels
ASTM C1141/C1141M	(2008) Standard Specification for Admixtures for Shotcrete
ASTM C1240	(2012) Standard Specification for Silica Fume Used in Cementitious Mixtures

ASTM C136	(2006) Standard Test Method for Sieve Analysis of Fine and Coarse Aggregates
ASTM C150/C150M	(2012) Standard Specification for Portland Cement
ASTM C171	(2007) Standard Specification for Sheet Materials for Curing Concrete
ASTM C231/C231M	(2010) Standard Test Method for Air Content of Freshly Mixed Concrete by the Pressure Method
ASTM C266	(2013) Standard Test Method for Time of Setting of Hydraulic-Cement Paste by Gillmore Needles
ASTM C309	(2011) Standard Specification for Liquid Membrane-Forming Compounds for Curing Concrete
ASTM C33/C33M	(2013) Standard Specification for Concrete Aggregates
ASTM C42/C42M	(2013) Standard Test Method for Obtaining and Testing Drilled Cores and Sawed Beams of Concrete
ASTM C566	(2013) Standard Test Method for Total Evaporable Moisture Content of Aggregate by Drying
ASTM C595/C595M	(2013) Standard Specification for Blended Hydraulic Cements
ASTM C618	(2012a) Standard Specification for Coal Fly Ash and Raw or Calcined Natural Pozzolan for Use in Concrete
ASTM C685/C685M	(2011) Concrete Made by Volumetric Batching and Continuous Mixing
ASTM C881/C881M	(2013) Standard Specification for Epoxy-Resin-Base Bonding Systems for Concrete
ASTM C94/C94M	(2014) Standard Specification for Ready-Mixed Concrete
ASTM C989/C989M	(2013) Standard Specification for Slag Cement for Use in Concrete and Mortars

U.S. ARMY CORPS OF ENGINEERS (USACE)

COE CRD-C 400	(1963) Requirements for Water for Use in Mixing or Curing Concrete

1.3 SYSTEM DESCRIPTION

1.3.1 Strength

Final acceptance of the shotcrete will be based on compressive strength results obtained from cores.

1.3.2 Compressive Strength

The required compressive strength of cores shall not be less than 4000 psi at 28 days age when tested in accordance with ASTM C42/C42M. The average compressive strength of cores taken from the test panel, representing a shift or not more than 50 cubic yards of shotcrete tested at 28 days of age, shall equal or exceed the required compressive strength specified with no individual core less than 85 percent of the required compressive strength. When the length of a core is less than 1.94 times the diameter, the correction factors given in ASTM C42/C42M will be applied to obtain the compressive strength of individual cores.

1.4 SUBMITTALS

Government approval is required for submittals with a "G" designation; submittals not having a "G" designation are for information only. When used, a designation following the "G" designation identifies the office that will review the submittal for the Government. Submit the following in accordance with Section 01 33 00 SUBMITTAL PROCEDURES:

SD-06 Test Reports

Mixture Proportions; G, ED
Aggregates
Accelerator Compatibility; G
Preconstruction Test Panels

SD-07 Certificates

Portland Cement
Pozzolans
Silica Fume
Accelerating Admixtures
Curing Materials
Steel Fiber Reinforcement
Qualifications; G

1.5 QUALITY ASSURANCE

Provide facilities and labor, as may be necessary, for obtaining and testing representative test samples. Shotcrete shall be sampled and tested by the method given in paragraph STRENGTH TESTING in PART 3.

1.5.1 Qualifications

Shotcrete will be produced by either the Dry or Wet Method. Submit a resume for each nozzleman certifying that each has not less than 1 year's experience for the particular type of shotcrete to be applied. The resume shall include company name, address, and telephone number, name of supervisor, and detailed description of work performed. All nozzlemen shall be certified in accordance with ACI CP-60. Qualifications of additional nozzlemen throughout the job shall be similarly submitted for

approval.

1.5.2 Preconstruction Test Panels

Specimens of the preconstruction test panels shall be made by each application crew using the equipment, materials, mixture proportions, and procedures for each mixture being considered, and for each shooting position to be encountered in the job. Submit cores taken from test panels and test them. Fabricate the test panels to the same thickness as the structure, but not less than 4 inches. At least five 2-inch diameter cores from each panel shall be taken for testing for compressive strength in accordance with ASTM C1140/C1140M when nonfiber-reinforced shotcrete is used. The compressive strength of the cores shall meet the requirements specified in paragraph COMPRESSIVE STRENGTH above.

PART 2 PRODUCTS

2.1 MATERIALS

2.1.1 Cementitious Materials

Cementitious materials shall be portland cement, blended hydraulic cement, portland cement in combination with pozzolan or ground granulated blast-furnace slag (GGBFS) , or portland cement in combination with silica fume conforming to appropriate specifications listed below.

2.1.1.1 Portland Cement

Portland cement shall meet the requirements of ASTM C150/C150M Type I or II. Submit certificate of compliance with all specification requirements.

2.1.1.2 Blended Hydraulic Cement

ASTM C595/C595M Type IS, IP.

2.1.1.3 Pozzolan Other Than Silica Fume

Pozzolans shall conform to ASTM C618, Class F, with the optional requirements for multiple factor, drying shrinkage, and uniformity of Table 2A. Submit certificate of compliance for fly ash and other pozzolans with all specification requirements.

2.1.1.4 Ground Granulated Blast-Furnace Slag

Ground granulated blast-furnace slag shall conform to ASTM C989/C989M, Grades 100 or 120.

2.1.1.5 Silica Fume

Silica may be furnished as a dry, densified material or as a slurry. Silica fume, unprocessed, or before processing into a slurry or a densified material, shall conform to ASTM C1240. Submit certificate of compliance for silica fume with all specification requirements.

2.1.2 Aggregates

Submit Supplier's test reports for aggregates showing the materials meet the requirements of this specification. Aggregates shall conform to ASTM C33/C33M with the combined grading of coarse and fine aggregates

conforming to the grading shown below.

PERCENT BY MASS PASSING INDIVIDUAL SIEVES			
SIEVE SIZE	GRADING NO. 1	GRADING NO. 2	GRADING NO. 3*
3/4 inch	--	--	100
1/2 inch	--	100	80-95
3/8 inch	100	90-100	70-90
No. 4	95-100	75-85	50-70
No. 8	80-100	50-70	35-55
No. 16	50-85	35-55	20-40
No. 30	25-60	20-35	10-30
No. 50	10-30	8-20	5-17
No. 100	2-10	2-10	2-10

* Fine and coarse aggregates shall be batched separately to avoid segregation. ""

2.1.3 Water

Use fresh, clean, potable mixing water or nonpotable water which meets the requirements of COE CRD-C 400.

2.1.4 Admixtures

a. Admixtures to be used, when required or approved, shall comply with the appropriate sections of ASTM C1141/C1141M. Except as otherwise accepted, soluble admixtures shall be dissolved in water before introduction into the shotcrete mixture.

b. When accelerating admixtures complying with ASTM C1141/C1141M, Type II, Grade 1, are to be used, establish the accelerator compatibility of the job cement and the proposed accelerators using ASTM C266, except as modified herein. The powdered accelerator shall be blended with 1.25 ounces of cement until uniform and 0.004 gal of water shall then be added. The liquid accelerator shall first be mixed with 0.004 gal of water and then added to 1.25 ounces of cement. Three percent of the proposed accelerator by mass of cement shall be used as a starting point. Mixing shall be accomplished within 15 seconds. The specimen shall be molded within 1 minute of adding the mixing water. If initial set is 2 minutes or less and a final set is 10 minutes or less, the accelerator is considered compatible. If these values are not achieved in the first test, additional tests shall be run using 2 percent and 4 percent of accelerator. Submit document establishing the compatibility of the job cement and the proposed accelerators and certificate of compliance for accelerating admixtures with all specification

requirements.

2.1.5 Curing Materials

Submit certificate of compliance for curing materials with all specification requirements. Curing materials shall meet the following requirements.

2.1.5.1 Impervious Sheet Materials

ASTM C171, type optional except polyethylene film, if used, shall be white opaque.

2.1.5.2 Membrane-Forming Curing Compound

ASTM C309, Type 1-D or Type 2.

2.1.6 Reinforcement

2.1.6.1 Steel Fiber Reinforcement

Steel fiber reinforcement shall meet the requirements of ASTM A820/A820M. Submit certificate of compliance for fiber reinforcement with all specification requirements.

2.1.7 Air Content

Air-entraining admixture shall be used in such proportion that the air content of the shotcrete prior to gunning shall be 5 plus or minus (±) 1.0 percent as determined by ASTM C231/C231M.

2.1.8 Air Supply

Provide a supply of clean, dry air adequate for maintaining sufficient nozzle velocity for all parts of the work and, if required, for simultaneous operation of a suitable blowpipe for clearing away rebound.

2.2 MIXTURE PROPORTIONS

Mixture proportions and test data from prior experience within 2 years, if available, may be submitted for approval. If test data from experience are not available or accepted, specimens shall be made and tested from mixtures having three or more different proportions. The recommended mixture proportions, sources of materials, and all test results shall be submitted for acceptance. Mixture proportions for nonfiber-reinforced shotcrete shall be selected on the basis of compressive strength tests of cores obtained from test panels fabricated in accordance with ASTM C1140/C1140M and having minimum dimensions of 30 by 30 by 4 inches. Cores shall be continuously moist cured until testing at 28 days age. For mixture acceptance purposes, the average compressive strength of at least three cores shall be at least equal to 1.2 times the required compressive strength specified in paragraph COMPRESSIVE STRENGTH in PART 1. Submit the recommended mixture proportions, sources of materials, and all test results, for approval.

2.3 EQUIPMENT

2.3.1 Dry Mix Batching and Mixing

Aggregate and cementitious materials may be batched by mass or by volume. Equipment for batching by mass shall be capable of the accuracy specified in ASTM C94/C94M. Volumetric equipment shall be capable of batching with the accuracy specified in ASTM C685/C685M. The mixing equipment shall be capable of thoroughly mixing the materials in sufficient quantity to maintain placing continuity and be capable of discharging all mixed material without any carryover from one batch to the next.

2.3.2 Delivery Equipment for Dry Mix

The equipment shall be capable of discharging the aggregate-cement mixture into the delivery hose and delivering a continuous smooth stream of uniformly mixed material to the discharge nozzle. The discharge nozzle shall be equipped with a manually operated water injection system (water ring) for directing an even distribution of water through the aggregate-cement mixture. The water valve shall be capable of ready adjustment to vary the quantity of water and shall be convenient to the nozzleman. The water pressure at the discharge nozzle shall be sufficiently greater than the operating air pressure to ensure that the water is completely mixed with the other materials. If the line water pressure is inadequate, a water pump shall be introduced into the line. The water pressure shall be steady (nonpulsating). The delivery equipment shall be thoroughly cleaned at the end of each shift. Equipment parts, especially the nozzle liner and water ring, shall be regularly inspected and replaced as required.

2.3.3 Wet Mix Batching and Mixing

Batching and mixing shall be accomplished in accordance with the applicable provisions of ASTM C94/C94M. If volumetric batching and mixing are used, the materials shall be batched and mixed in accordance with the applicable provisions of ASTM C685/C685M. The mixing equipment shall be capable of thoroughly mixing the specified materials in sufficient quantity to maintain continuous placing. Ready-mix shotcrete complying with ASTM C94/C94M may be used.

2.3.4 Delivery Equipment for Wet Mix

The equipment shall be capable of delivering the premixed materials accurately, uniformly, and continuously through the delivery hose. Recommendations of the equipment manufacturer shall be followed on the type and size of nozzle to be used and on cleaning, inspection, and maintenance of the equipment.

PART 3 EXECUTION

3.1 PREPARATION OF SURFACES

3.1.1 Earth

Earth shall be compacted and trimmed to line and graded before placement of shotcrete. Surfaces to receive shotcrete shall be dampened.

3.1.2 Existing Concrete

All unsound and loose materials shall be removed by sandblasting, grinding, or high-pressure water jets before applying shotcrete. Any area to be repaired shall be chipped off or scarified to remove offsets which would cause an abrupt change in thickness without suitable reinforcement. Edges shall be tapered to leave no square shoulders at the perimeter of a cavity. The surface shall be dampened but without visible free water.

3.1.3 Rock

Rock surfaces shall be cleaned to remove vegetation, loose or drummy material, mud, running water, and other foreign matter that will prevent bond of the shotcrete. The rock surface shall be dampened prior to placement of shotcrete.

3.1.4 Shotcrete

When a layer of shotcrete is to be covered by a succeeding layer at a later time, it shall first be allowed to develop its initial set. Then all laitance, loose material, and rebound shall be removed by brooming or scraping. Hardened laitance set shall be removed by sandblasting and the surface thoroughly cleaned.

3.1.5 Construction Joints

Unless otherwise specified, construction joints shall be tapered to a shallow edge form, about 1 inch thick. If nontapered joints are specified, take special care to avoid or remove trapped rebound at the joint. The entire joint shall be thoroughly cleaned and wetted prior to the application of additional shotcrete.

3.2 PLACEMENT OF SHOTCRETE

3.2.1 General

Place shotcrete using suitable delivery equipment and procedures. The area to which shotcrete is to be applied shall be clean and free of rebound or overspray.

3.2.2 Placement Techniques

3.2.2.1 Placement Control

Thickness, method of support, air pressure, and water content of shotcrete shall be controlled to preclude sagging or sloughing off. Shotcreting shall be discontinued or suitable means shall be provided to screen the nozzle stream if wind or air currents cause separation of the nozzle stream during placement.

3.2.2.2 Corners

Horizontal and vertical corners and any area where rebound cannot escape or be blown free shall be filled first.

3.2.3 Placement Around Reinforcement

The nozzle shall be held at such distance and angle to place material behind reinforcement before any material is allowed to accumulate on the

face of the reinforcement. In the dry-mix process, additional water may be added to the mixture when encasing reinforcement to facilitate a smooth flow of material behind the bars. Shotcrete shall not be placed through more than one layer of reinforcing steel rods or mesh in one application unless demonstrated by preconstruction tests that steel is properly encased.

3.2.4 Cover of Reinforcement

The following minimum cover shall be provided.

a. For shotcrete used as linings, coatings, slab, or wall: 3/4 inch.

b. For required structural reinforcement in beams, girders, and columns: 1-1/2 inches.

3.2.5 Placement Precautions

The following precautions shall be taken during placement.

a. Placement shall be stopped if drying or stiffening of the mixture takes place at any time prior to delivery to the nozzle.

b. Rebound or previously expended material shall not be used in the shotcrete mixture.

3.3 REPAIR OF DEFECTS

3.3.1 Defects

Defective areas larger than 48 square inches or 2 inches deep shall be removed and replaced with fresh shotcrete. These defects include honeycombing, lamination, dry patches, voids, or sand pockets. Defective areas shall be removed in accordance with the procedures described in paragraph EXISTING CONCRETE and replaced with fresh shotcrete.

3.3.1.1 Repairs

All repairs shall be made within 1 week of the time the deficiency is discovered. All unacceptable materials shall be removed and repaired by the procedures described in the following two paragraphs. Voids and holes left by the removal of tie rods in all permanently exposed surfaces not to be backfilled and in surfaces to be exposed to water shall be reamed and completely filled with dry-patching mortar as specified below.

3.3.1.2 Minor Patching

Minor patching may be accomplished with a dry-pack mixture, or with materials as approved by the Contracting Officer. Patches that exceed 0.1 cubic foot in volume shall receive a brush coat of approved epoxy resin meeting ASTM C881/C881M, Type II, as a prime coat. Care shall be taken not to spill epoxy or overcoat the repair surface so that the epoxy runs or is squeezed out onto the surface which will remain exposed to view. Epoxy resin shall be used in strict conformance with manufacturer's recommendations with special attention paid to pot life, safety, and thin film tack time.

3.3.2 Core Holes

Core holes shall not be repaired with shotcrete. Instead, they shall be

filled solid with a dry-pack mixture after being cleaned and thoroughly dampened.

3.4 FINISHING

3.4.1 Natural Gun Finish

Unless otherwise specified, provide undisturbed final layer of shotcrete as applied from nozzle without hand finishing.

3.4.2 Cutting Screed

After the surface has taken its initial set (crumbling slightly when cut), excess material outside the forms and ground wires shall be sliced off with a downward cutting motion using a sharp-edged cutting screed.

3.4.3 Flash Coat

A thin coat of shotcrete containing finer sand applied from a distance greater than normal shall be applied to the surface as soon as possible after the screeding.

3.4.4 Float and Trowel Finish

Final surface finish shall be provided using steel trowel. Troweling of thin sections of shotcrete shall be avoided unless both troweling and commencement of moisture curing take place within a relatively short period after placement of shotcrete.

3.4.5 Fiber-Reinforced Shotcrete

Finish the outer surface of the structure with a layer of nonfiber-reinforced shotcrete and provide an appropriate finish as denoted.

3.5 CURING AND PROTECTION

3.5.1 Initial Curing

Immediately after finishing, shotcrete shall be kept continuously moist for at least 3 days. One of the following materials or methods shall be used:

a. Ponding or continuous sprinkling.

b. Absorptive mat or fabric, sand, or other covering kept continuously wet.

c. Curing Compounds. On natural gun or flash finishes, use the coverage application requirement of 100 square feet/gallon or twice the manufacturer's requirement, whichever is less. Curing compounds shall not be used on any surfaces against which additional shotcrete or other cementitious finishing materials are to be bonded unless positive measures, such as sandblasting, are taken to completely remove curing compounds prior to the application of such additional materials.

3.5.2 Final Curing

Additional curing shall be provided immediately following the initial curing and before the shotcrete has dried. One of the following materials or methods shall be used:

a. Continue the method used in initial curing.

b. Application of impervious sheet material conforming to ASTM C171.

3.5.3 Formed Surface

If forms are to be removed during curing period, one of the curing materials or methods listed in paragraph INITIAL CURING shall be used immediately. Such curing shall be continued for the remainder of the curing period.

3.5.4 Duration of Curing

Curing shall be continued for the first 7 days after shotcreting or until the specified compressive strength of the in-place shotcrete as determined by specimens obtained and tested in accordance with ASTM C42/C42M is achieved.

3.5.5 Temperature Considerations

The air temperature in contact with the shotcrete shall be continuously maintained at a temperature above 40 degrees F for at least 3 days after placement. No shotcrete shall be applied when the concrete surface or air in contact with the concrete surface is below 40 degrees F.

3.6 TESTS

3.6.1 Strength Testing

Test specimens shall be initially cured onsite, then shall be transported in an approved manner to an approved testing laboratory meeting the requirements of ASTM C1077 within 48 hours of scheduled testing time.

3.6.1.1 Test Panel

One test panel shall be made for every 50 cubic yards of shotcrete placed but not less than one per each shift during which any shotcrete is placed. Panels shall have minimum dimensions of 18 by 18 by 4 inches and shall be gunned in the same positions as the work represented during the course of the work by the Contractor's regular nozzleman. Panels shall be field cured in the same manner as in the job. Three 2 inch diameter cores shall be drilled from each panel at least 40 hours prior to testing and tested in accordance with ASTM C1140/C1140M.

3.6.1.2 Test Cores

Test cores shall be drilled from the structure at least 40 hours prior to testing and tested in accordance with ASTM C1140/C1140M. A set of three cores shall be taken not less than once each shift that shotcrete is placed nor less than once for each 50 cubic yards of shotcrete placed through the nozzle. The diameter of core specimens shall be determined in accordance with ASTM C42/C42M.

3.6.1.3 Average Compressive Strength

The compressive strength of the shotcrete shall be determined from the average of three cores obtained from a test panel representing a specific volume of shotcrete and tested on the 28 day after panel fabrication

3.6.2 Aggregate Moisture

Prior to batching the shotcrete and at least once during a shift in which shotcrete is being batched, the coarse and fine aggregate moisture content shall be determined in accordance with ASTM C566. The batch weights of both the aggregates and mixing water shall be appropriately adjusted to account for the available free moisture in the aggregates. The amount of free moisture in the aggregates, expressed as pounds of water per cubic yard, shall be recorded on the batching ticket and delivered to the Contracting Officer prior to placement during the shift. The Contracting Officer will have the option to request additional aggregate moisture content tests for each of the required tests.

3.6.3 Grading

The grading of the coarse and fine aggregate shall be determined in accordance with ASTM C136. The fine and coarse aggregate grading shall be determined prior to batching the shotcrete and at least once during a shift in which shotcrete is being batched. The Contracting Officer will have the option to require one additional sieve analysis test for aggregate type.

3.6.4 Thickness

The minimum shotcrete thickness shall be as shown in the drawings. The unhardened shotcrete shall be checked for thickness using a probe by the nozzleman or laborer at the time of placement. These thickness checks shall be at 15-minute intervals and all low or thin areas shall be corrected by applying additional shotcrete.

3.6.5 Mixture Proportions

Record and check mixture proportions at least once per shift for weigh batching. Record and check mixture proportions as recommended by ASTM C685/C685M at least once per shift for volumetric batching and continuous mixing plants.

3.6.6 Preparations

Prior to each placement of shotcrete, the Contractor's inspector shall certify in writing or by an approved checkout form that cleanup and preparations are in accordance with the plans and specifications.

3.6.7 Air Content

Air content tests shall be conducted on wet-mix shotcrete according to ASTM C231/C231M with a frequency of not less than once each shift nor less than once for each 50 cubic yards of shotcrete placed through the nozzle. Tests shall be conducted on samples taken as the wet shotcrete mixture is placed in the delivery equipment.

-- End of Section --

SECTION 31 00 00

EARTHWORK
08/08

PART 1 GENERAL

1.1 MEASUREMENT PROCEDURES

1.1.1 Excavation

The unit of measurement for excavation and borrow will be the cubic yard, computed by the average end area method from cross sections taken before and after the excavation and borrow operations, including the excavation for ditches, gutters, and channel changes, when the material is acceptably utilized or disposed of as herein specified. The measurements will include authorized excavation of rock , authorized excavation of unsatisfactory subgrade soil, and the volume of loose, scattered rocks and boulders collected within the limits of the work; allowance will be made on the same basis for selected backfill ordered as replacement. The measurement will not include the volume of subgrade material or other material that is scarified or plowed and reused in-place, and will not include the volume excavated without authorization or the volume of any material used for purposes other than directed. The measurement will not include the volume of any excavation performed prior to the taking of elevations and measurements of the undisturbed grade.

1.1.2 Overhaul Requirements

Allow the unit of measurement for overhaul to be the station-yard. The overhaul distance will be the distance in stations between the center of volume of the overhaul material in its original position and the center of volume after placing, minus the free-haul distance in stations. The haul distance will be measured along the shortest route determined by the Contracting Officer as feasible and satisfactory. Do no measure or waste unsatisfactory materials for overhaul where the length of haul for borrow is within the free-haul limits.

1.1.3 Select Granular Material

Measure select granular material in place as the actual cubic yards replacing wet or unstable material in trench bottoms within the limits shown . Provide unit prices which include furnishing and placing the granular material, excavation and disposal of unsatisfactory material, and additional requirements for sheeting and bracing, pumping, bailing, cleaning, and other incidentals necessary to complete the work.

1.2 PAYMENT PROCEDURES

Payment will constitute full compensation for all labor, equipment, tools, supplies, and incidentals necessary to complete the work.

1.2.1 Classified Excavation

Classified excavation will be paid for at the contract unit prices per cubic yard for common or rock excavation.

1.2.2 Unclassified Excavation

Unclassified excavation will be paid for at the contract unit price per cubic yard for unclassified excavation.

1.2.3 Classified Borrow

Classified borrow will be paid for at the contract unit prices per cubic yard for common or rock borrow.

1.2.4 Unclassified Borrow

Unclassified borrow will be paid for at the contract unit price per cubic yard for unclassified borrow.

1.2.5 Authorized Overhaul

The number of station-yards of overhaul to be paid for will be the product of number of cubic yards of overhaul material measured in the original position, multiplied by the overhaul distance measured in stations of 100 feet and will be paid for at the contract unit price per station-yard for overhaul in excess of the free-haul limit as designated in paragraph DEFINITIONS.

1.3 CRITERIA FOR BIDDING

Base bids on the following criteria:

a. Surface elevations are as indicated.

b. Pipes or other artificial obstructions, except those indicated, will not be encountered.

d. Ground water conditions and elevations are unknown.

f. Hard materials and rock will be encountered in excavations.

1.4 REFERENCES

The publications listed below form a part of this specification to the extent referenced. The publications are referred to within the text by the basic designation only.

AMERICAN ASSOCIATION OF STATE HIGHWAY AND TRANSPORTATION OFFICIALS (AASHTO)

AASHTO T 180	(2010) Standard Method of Test for Moisture-Density Relations of Soils Using a 4.54-kg (10-lb) Rammer and a 457-mm (18-in.) Drop
AASHTO T 224	(2010) Standard Method of Test for Correction for Coarse Particles in the Soil Compaction Test

ASTM INTERNATIONAL (ASTM)

ASTM C136	(2006) Standard Test Method for Sieve Analysis of Fine and Coarse Aggregates
ASTM D1140	(2000; R 2006) Amount of Material in Soils Finer than the No. 200 (75-micrometer) Sieve
ASTM D1557	(2012) Standard Test Methods for Laboratory Compaction Characteristics of Soil Using Modified Effort (56,000 ft-lbf/ft3) (2700 kN-m/m3)
ASTM D2487	(2011) Soils for Engineering Purposes (Unified Soil Classification System)
ASTM D422	(1963; R 2007; E 2014) Particle-Size Analysis of Soils
ASTM D4318	(2010; E 2014) Liquid Limit, Plastic Limit, and Plasticity Index of Soils

U.S. ENVIRONMENTAL PROTECTION AGENCY (EPA)

EPA 600/4-79/020	(1983) Methods for Chemical Analysis of Water and Wastes
EPA SW-846.3-3	(1999, Third Edition, Update III-A) Test Methods for Evaluating Solid Waste: Physical/Chemical Methods

1.5 DEFINITIONS

1.5.1 Satisfactory Materials

Satisfactory materials comprise any materials classified by ASTM D2487 as GW, GP, GM, GP-GM, GW-GM, GC, GP-GC, GM-GC, SW, and SP. Satisfactory materials for grading comprise stones less than 8 inches, except for fill material for pavements and railroads which comprise stones less than 3 inches in any dimension.

1.5.2 Unsatisfactory Materials

Materials which do not comply with the requirements for satisfactory materials are unsatisfactory. Unsatisfactory materials also include man-made fills; trash; refuse; backfills from previous construction; and material classified as satisfactory which contains root and other organic matter or frozen material. Notify the Contracting Officer when encountering any contaminated materials.

1.5.3 Cohesionless and Cohesive Materials

Cohesionless materials include materials classified in ASTM D2487 as GW, GP, SW, and SP. Cohesive materials include materials classified as GC, SC, ML, CL, MH, and CH. Materials classified as GM and SM will be identified as cohesionless only when the fines are nonplastic. Perform testing, required for classifying materials, in accordance with ASTM D4318, ASTM C136, ASTM D422, and ASTM D1140.

1.5.4 Degree of Compaction

Degree of compaction required, except as noted in the second sentence, is expressed as a percentage of the maximum density obtained by the test procedure presented in ASTM D1557 abbreviated as a percent of laboratory maximum density. Since ASTM D1557 applies only to soils that have 30 percent or less by weight of their particles retained on the 3/4 inch sieve, express the degree of compaction for material having more than 30 percent by weight of their particles retained on the 3/4 inch sieve as a percentage of the maximum density in accordance with AASHTO T 180 and corrected with AASHTO T 224. To maintain the same percentage of coarse material, use the "remove and replace" procedure as described in NOTE 8 of Paragraph 7.2 in AASHTO T 180.

1.5.5 Overhaul

Overhaul is the authorized transportation of satisfactory excavation or borrow materials in excess of the free-haul limit of 10 stations. Overhaul is the product of the quantity of materials hauled beyond the free-haul limit, and the distance such materials are hauled beyond the free-haul limit, expressed in station yards.

1.5.6 Hard/Unyielding Materials

Hard/Unyielding materials comprise weathered rock, dense consolidated deposits, or conglomerate materials which are not included in the definition of "rock" with stones greater than 18 inch in any dimension. These materials usually require the use of heavy excavation equipment, ripper teeth, or jack hammers for removal.

1.5.7 Rock

Solid homogeneous interlocking crystalline material with firmly cemented, laminated, or foliated masses or conglomerate deposits, neither of which can be removed without systematic drilling and blasting, drilling and the use of expansion jacks or feather wedges, or the use of backhoe-mounted pneumatic hole punchers or rock breakers; also large boulders, buried masonry, or concrete other than pavement exceeding 1/2 cubic yard in volume. Removal of hard material will not be considered rock excavation because of intermittent drilling and blasting that is performed merely to increase production.

1.5.8 Unstable Material

Unstable materials are too wet to properly support the utility pipe, conduit, or appurtenant structure.

1.5.9 Select Granular Material

1.5.9.1 General Requirements

Select granular material consist of materials classified as GW, GP, SW, or SP by ASTM D2487 where indicated. The liquid limit of such material must not exceed 35 percent when tested in accordance with ASTM D4318. The plasticity index must not be greater than 12 percent when tested in accordance with ASTM D4318, and not more than 35 percent by weight may be finer than No. 200 sieve when tested in accordance with ASTM D1140.

1.5.10 Initial Backfill Material

Initial backfill consists of select granular material or satisfactory materials free from rocks 4 inches or larger in any dimension or free from rocks of such size as recommended by the pipe manufacturer, whichever is smaller. When the pipe is coated or wrapped for corrosion protection, free the initial backfill material of stones larger than 4 inches in any dimension or as recommended by the pipe manufacturer, whichever is smaller.

1.6 SYSTEM DESCRIPTION

No subsurface explorations exist for the excavation. Subsurface conditions are assumed to be weathered rock and variations may exist from those assumed.

1.6.1 Classification of Excavation

No consideration will be given to the nature of the materials, and all excavation will be designated as unclassified excavation.

1.6.1.1 Common Excavation

Include common excavation with the satisfactory removal and disposal of all materials not classified as rock excavation.

1.6.1.2 Rock Excavation

Submit notification of encountering rock in the project. Include rock excavation with blasting, excavating, grading, disposing of material classified as rock, and the satisfactory removal and disposal of boulders 1/2 cubic yard or more in volume; solid rock; rock material that is in ledges, bedded deposits, and unstratified masses, which cannot be removed without systematic drilling and blasting; firmly cemented conglomerate deposits possessing the characteristics of solid rock impossible to remove without systematic drilling and blasting; and hard materials (see Definitions). Include the removal of any concrete or masonry structures, except pavements, exceeding 1/2 cubic yard in volume that may be encountered in the work in this classification. If at any time during excavation, including excavation from borrow areas, the Contractor encounters material that may be classified as rock excavation, uncover such material and notify the Contracting Officer. Do not proceed with the excavation of this material until the Contracting Officer has classified the materials as common excavation or rock excavation and has taken cross sections as required. Failure on the part of the Contractor to uncover such material, notify the Contracting Officer, and allow ample time for classification and cross sectioning of the undisturbed surface of such material will cause the forfeiture of the Contractor's right of claim to any classification or volume of material to be paid for other than that allowed by the Contracting Officer for the areas of work in which such deposits occur.

1.6.2 Blasting

Blasting will not be permitted.

1.6.3 Dewatering Work Plan

Submit procedures for accomplishing dewatering work.

1.7 SUBMITTALS

Government approval is required for submittals with a "G" designation; submittals not having a "G" designation are for information only. When used, a designation following the "G" designation identifies the office that will review the submittal for the Government. Submit the following in accordance with Section 01 33 00 SUBMITTAL PROCEDURES:

SD-01 Preconstruction Submittals

Shoring; G
Dewatering Work Plan; G

SD-03 Product Data

Utilization of Excavated Materials; G
Rock Excavation

SD-06 Test Reports

Testing
Borrow Site Testing

Within 24 hours of conclusion of physical tests, submit 3 copies of test results, including calibration curves and results of calibration tests.

SD-07 Certificates

Testing

PART 2 PRODUCTS

2.1 REQUIREMENTS FOR OFFSITE SOILS

Test offsite soils brought in for use as backfill for Total Petroleum Hydrocarbons (TPH), Benzene, Toluene, Ethyl Benzene, and Xylene (BTEX) and full Toxicity Characteristic Leaching Procedure (TCLP) including ignitability, corrosivity and reactivity. Backfill shall contain a maximum of 100 parts per million (ppm) of total petroleum hydrocarbons (TPH) and a maximum of 10 ppm of the sum of Benzene, Toluene, Ethyl Benzene, and Xylene (BTEX) and shall pass the TCPL test. Determine TPH concentrations by using EPA 600/4-79/020 Method 418.1. Determine BTEX concentrations by using EPA SW-846.3-3 Method 5030/8020. Perform TCLP in accordance with EPA SW-846.3-3 Method 1311. Provide Borrow Site Testing for TPH, BTEX and TCLP from a composite sample of material from the borrow site, with at least one test from each borrow site. Do not bring material onsite until tests have been approved by the Contracting Officer.

2.2 BURIED WARNING AND IDENTIFICATION TAPE

Provide polyethylene plastic and metallic core or metallic-faced, acid- and alkali-resistant, polyethylene plastic warning tape manufactured specifically for warning and identification of buried utility lines. Provide tape on rolls, 3 inches minimum width, color coded as specified below for the intended utility with warning and identification imprinted in bold black letters continuously over the entire tape length. Warning and

identification to read, "CAUTION, BURIED (intended service) LINE BELOW" or similar wording. Provide permanent color and printing, unaffected by moisture or soil.

Warning Tape Color Codes	
Red	Electric
Yellow	Gas, Oil; Dangerous Materials
Orange	Telephone and Other Communications
Blue	Water Systems
Green	Sewer Systems
White	Steam Systems
Gray	Compressed Air

2.2.1 Warning Tape for Metallic Piping

Provide acid and alkali-resistant polyethylene plastic tape conforming to the width, color, and printing requirements specified above, with a minimum thickness of 0.003 inch and a minimum strength of 1500 psi lengthwise, and 1250 psi crosswise, with a maximum 350 percent elongation.

2.2.2 Detectable Warning Tape for Non-Metallic Piping

Provide polyethylene plastic tape conforming to the width, color, and printing requirements specified above, with a minimum thickness of 0.004 inch, and a minimum strength of 1500 psi lengthwise and 1250 psi crosswise. Manufacture tape with integral wires, foil backing, or other means of enabling detection by a metal detector when tape is buried up to 3 feet deep. Encase metallic element of the tape in a protective jacket or provide with other means of corrosion protection.

2.3 DETECTION WIRE FOR NON-METALLIC PIPING

Insulate a single strand, solid copper detection wire with a minimum of 12 AWG.

2.4 MATERIAL FOR RIP-RAP

Provide Bedding material and rock conforming to DOT State Standards for construction indicated.

2.4.1 Bedding Material

Provide bedding material consisting of sand, gravel, or crushed rock, well graded, or poorly graded with a maximum particle size of 2 inches. Compose material of tough, durable particles. Allow fines passing the No. 200 standard sieve with a plasticity index less than six.

2.4.2 Rock

Provide rock fragments sufficiently durable to ensure permanence in the structure and the environment in which it is to be used. Use rock fragments free from cracks, seams, and other defects that would increase the risk of deterioration from natural causes. Provide fragments sized so that no individual fragment exceeds a weight of 150 pounds and that no more than 10 percent of the mixture, by weight, consists of fragments weighing 2 pounds or less each. Provide rock with a minimum specific gravity of 2.50 . Do not permit the inclusion of more than trace 1 percent quantities of dirt, sand, clay, and rock fines.

PART 3 EXECUTION

3.1 STRIPPING OF TOPSOIL

Where indicated or directed, strip topsoil to a depth of 4 inches. Spread topsoil on areas already graded and prepared for topsoil, or transported and deposited in stockpiles convenient to areas that are to receive application of the topsoil later, or at locations indicated or specified. Keep topsoil separate from other excavated materials, brush, litter, objectionable weeds, roots, stones larger than 2 inches in diameter, and other materials that would interfere with planting and maintenance operations. Stockpile in locations indicated or Remove from the site any surplus of topsoil from excavations and gradings.

3.2 GENERAL EXCAVATION

Perform excavation of every type of material encountered within the limits of the project to the lines, grades, and elevations indicated and as specified. Perform the grading in accordance with the typical sections shown and the tolerances specified in paragraph FINISHING. Transport satisfactory excavated materials and place in fill or embankment within the limits of the work. Excavate unsatisfactory materials encountered within the limits of the work below grade and replace with satisfactory materials as directed. Include such excavated material and the satisfactory material ordered as replacement in excavation. Dispose surplus satisfactory excavated material not required for fill or embankment in areas approved for surplus material storage or designated waste areas. Dispose unsatisfactory excavated material in designated waste or spoil areas. During construction, perform excavation and fill in a manner and sequence that will provide proper drainage at all times. Excavate material required for fill or embankment in excess of that produced by excavation within the grading limits from the borrow areas indicated or from other approved areas selected by the Contractor as specified.

3.2.1 Ditches, Gutters, and Channel Changes

Finish excavation of ditches, gutters, and channel changes by cutting accurately to the cross sections, grades, and elevations shown on the Drawings. Do not excavate ditches and gutters below grades shown. Backfill the excessive open ditch or gutter excavation with satisfactory, thoroughly compacted, material or with suitable stone or cobble to grades shown. Dispose excavated material as shown or as directed, except in no case allow material be deposited a maximum 4 feet from edge of a ditch. Maintain excavations free from detrimental quantities of leaves, brush, sticks, trash, and other debris until final acceptance of the work.

3.2.2 Drainage Structures

Make excavations to the lines, grades, and elevations shown, or as directed. Provide trenches and foundation pits of sufficient size to permit the placement and removal of forms for the full length and width of structure footings and foundations as shown. Clean rock or other hard foundation material of loose debris and cut to a firm, level, stepped, or serrated surface. Remove loose disintegrated rock and thin strata. Do not disturb the bottom of the excavation when concrete or masonry is to be placed in an excavated area. Do not excavate to the final grade level until just before the concrete or masonry is to be placed. Where pile foundations are to be used, stop the excavation of each pit at an elevation 1 foot above the base of the footing, as specified, before piles are driven. After the pile driving has been completed, remove loose and displaced material and complete excavation, leaving a smooth, solid, undisturbed surface to receive the concrete or masonry.

3.2.3 Drainage

Provide for the collection and disposal of surface and subsurface water encountered during construction. Completely drain construction site during periods of construction to keep soil materials sufficiently dry. Construct storm drainage features (ponds/basins) at the earliest stages of site development, and throughout construction grade the construction area to provide positive surface water runoff away from the construction activity or provide temporary ditches, swales, and other drainage features and equipment as required to maintain dry soils. When unsuitable working platforms for equipment operation and unsuitable soil support for subsequent construction features develop, remove unsuitable material and provide new soil material as specified herein. It is the responsibility of the Contractor to assess the soil and ground water conditions presented by the plans and specifications and to employ necessary measures to permit construction to proceed.

3.2.4 Dewatering

Control groundwater flowing toward or into excavations to prevent sloughing of excavation slopes and walls, boils, uplift and heave in the excavation and to eliminate interference with orderly progress of construction. Do not permit French drains, sumps, ditches or trenches within 3 feet of the foundation of any structure, except with specific written approval, and after specific contractual provisions for restoration of the foundation area have been made. Take control measures by the time the excavation reaches the water level in order to maintain the integrity of the in situ material. While the excavation is open, maintain the water level continuously, at least 2 feet below the working level.

3.2.5 Underground Utilities

The Contractor is responsible for movement of construction machinery and equipment over pipes and utilities during construction. Perform work adjacent to non-Government utilities as indicated in accordance with procedures outlined by utility company. Report damage to utility lines or subsurface construction immediately to the Contracting Officer.

3.3 SELECTION OF BORROW MATERIAL

Select borrow material to meet the requirements and conditions of the particular fill for which it is to be used. Obtain borrow material from

the borrow areas from approved private sources. Unless otherwise provided in the contract, the Contractor is responsible for obtaining the right to procure material, pay royalties and other charges involved, and bear the expense of developing the sources, including rights-of-way for hauling from the owners. Borrow material from approved sources on Government-controlled land may be obtained without payment of royalties. Unless specifically provided, do not obtain borrow within the limits of the project site without prior written approval. Consider necessary clearing, grubbing, and satisfactory drainage of borrow pits and the disposal of debris thereon related operations to the borrow excavation.

3.4 OPENING AND DRAINAGE OF EXCAVATION AND BORROW PITS

Notify the Contracting Officer sufficiently in advance of the opening of any excavation or borrow pit or borrow areas to permit elevations and measurements of the undisturbed ground surface to be taken. Except as otherwise permitted, excavate borrow pits and other excavation areas providing adequate drainage. Transport overburden and other spoil material to designated spoil areas or otherwise dispose of as directed. Provide neatly trimmed and drained borrow pits after the excavation is completed. Ensure that excavation of any area, operation of borrow pits, or dumping of spoil material results in minimum detrimental effects on natural environmental conditions.

3.5 SHORING

3.5.1 General Requirements

Submit a Shoring and Sheeting plan for approval 15 days prior to starting work. Submit drawings and calculations, certified by a registered professional engineer, describing the methods for shoring and sheeting of excavations. Finish shoring, including sheet piling, and install as necessary to protect workmen, banks, adjacent paving, structures, and utilities. Remove shoring, bracing, and sheeting as excavations are backfilled, in a manner to prevent caving.

3.5.2 Geotechnical Engineer

Hire a Professional Geotechnical Engineer to provide inspection of excavations and soil/groundwater conditions throughout construction. The Geotechnical Engineer is responsible for performing pre-construction and periodic site visits throughout construction to assess site conditions. The Geotechnical Engineer is responsible for updating the excavation, sheeting and dewatering plans as construction progresses to reflect changing conditions and submit an updated plan if necessary. Submit a monthly written report, informing the Contractor and Contracting Officer of the status of the plan and an accounting of the Contractor's adherence to the plan addressing any present or potential problems. The Contracting Officer is responsible for arranging meetings with the Geotechnical Engineer at any time throughout the contract duration.

3.6 GRADING AREAS

Where indicated, divide work into grading areas within which satisfactory excavated material will be placed in embankments, fills, and required backfills. Do not haul satisfactory material excavated in one grading area to another grading area except when so directed in writing. Place and grade stockpiles of satisfactory, unsatisfactory and wasted materials as specified. Keep stockpiles in a neat and well drained condition, giving

due consideration to drainage at all times. Clear, grub, and seal by rubber-tired equipment, the ground surface at stockpile locations; separately stockpile excavated satisfactory and unsatisfactory materials. Protect stockpiles of satisfactory materials from contamination which may destroy the quality and fitness of the stockpiled material. If the Contractor fails to protect the stockpiles, and any material becomes unsatisfactory, remove and replace such material with satisfactory material from approved sources.

3.7 FINAL GRADE OF SURFACES TO SUPPORT CONCRETE

Do not excavate to final grade until just before concrete is to be placed. Only use excavation methods that will leave the foundation rock in a solid and unshattered condition. Roughen the level surfaces, and cut the sloped surfaces, as indicated, into rough steps or benches to provide a satisfactory bond. Protect shales from slaking and all surfaces from erosion resulting from ponding or water flow.

3.8 GROUND SURFACE PREPARATION

3.8.1 General Requirements

Remove and replace unsatisfactory material with satisfactory materials, as directed by the Contracting Officer, in surfaces to receive fill or in excavated areas. Scarify the surface to a depth of 6 inches before the fill is started. Plow, step, bench, or break up sloped surfaces steeper than 1 vertical to 4 horizontal so that the fill material will bond with the existing material. When subgrades are less than the specified density, break up the ground surface to a minimum depth of 6 inches, pulverizing, and compacting to the specified density. When the subgrade is part fill and part excavation or natural ground, scarify the excavated or natural ground portion to a depth of 12 inches and compact it as specified for the adjacent fill.

3.8.2 Frozen Material

Do not place material on surfaces that are muddy, frozen, or contain frost. Finish compaction by sheepsfoot rollers, pneumatic-tired rollers, steel-wheeled rollers, or other approved equipment well suited to the soil being compacted. Moisten material as necessary to provide the moisture content that will readily facilitate obtaining the specified compaction with the equipment used.

3.9 UTILIZATION OF EXCAVATED MATERIALS

Dispose unsatisfactory materials removing from excavations into designated waste disposal or spoil areas. Use satisfactory material removed from excavations, insofar as practicable, in the construction of fills, embankments, subgrades, shoulders, bedding (as backfill), and for similar purposes. Submit procedure and location for disposal of unused satisfactory material. Submit proposed source of borrow material. Do not waste any satisfactory excavated material without specific written authorization. Dispose of satisfactory material, authorized to be wasted, in designated areas approved for surplus material storage or designated waste areas as directed. Clear and grub newly designated waste areas on Government-controlled land before disposal of waste material thereon. Stockpile and use coarse rock from excavations for constructing slopes or embankments adjacent to streams, or sides and bottoms of channels and for protecting against erosion. Do not dispose excavated material to obstruct

the flow of any stream, endanger a partly finished structure, impair the efficiency or appearance of any structure, or be detrimental to the completed work in any way.

3.10 BURIED TAPE AND DETECTION WIRE

3.10.1 Buried Warning and Identification Tape

Provide buried utility lines with utility identification tape. Bury tape 12 inches below finished grade; under pavements and slabs, bury tape 6 inches below top of subgrade.

3.10.2 Buried Detection Wire

Bury detection wire directly above non-metallic piping at a distance not to exceed 12 inches above the top of pipe. Extend the wire continuously and unbroken, from manhole to manhole. Terminate the ends of the wire inside the manholes at each end of the pipe, with a minimum of 3 feet of wire, coiled, remaining accessible in each manhole. Furnish insulated wire over it's entire length. Install wires at manholes between the top of the corbel and the frame, and extend up through the chimney seal between the frame and the chimney seal. For force mains, terminate the wire in the valve pit at the pump station end of the pipe.

3.11 BACKFILLING AND COMPACTION

Place backfill adjacent to any and all types of structures, and compact to at least 90 percent laboratory maximum density for cohesive materials or 95 percent laboratory maximum density for cohesionless materials, to prevent wedging action or eccentric loading upon or against the structure. Prepare ground surface on which backfill is to be placed and provide compaction requirements for backfill materials in conformance with the applicable portions of paragraphs GROUND SURFACE PREPARATION. Finish compaction by sheepsfoot rollers, pneumatic-tired rollers, steel-wheeled rollers, vibratory compactors, or other approved equipment.

3.11.1 Backfill for Appurtenances

After the catchbasin, inlet, or similar structure has been constructed , place backfill in such a manner that the structure is not be damaged by the shock of falling earth. Deposit the backfill material, compact it as specified for final backfill, and bring up the backfill evenly on all sides of the structure to prevent eccentric loading and excessive stress.

3.12 SPECIAL REQUIREMENTS

Special requirements for both excavation and backfill relating to the specific utilities are as follows:

3.12.1 Rip-Rap Construction

Construct rip-rap on bedding material in accordance with DOT State Standards in the areas indicated. Trim and dress indicated areas to conform to cross sections, lines and grades shown within a tolerance of 0.1 foot.

3.12.1.1 Bedding Placement

Spread bedding material uniformly to a thickness of at least 12 inches on prepared subgrade as indicated. Compaction of bedding is not required.

Finish bedding to present even surface free from mounds and windrows.

3.12.1.2 Stone Placement

Place rock for rip-rap on prepared bedding material to produce a well graded mass with the minimum practicable percentage of voids in conformance with lines and grades indicated. Distribute larger rock fragments, with dimensions extending the full depth of the rip-rap throughout the entire mass and eliminate "pockets" of small rock fragments. Rearrange individual pieces by mechanical equipment or by hand as necessary to obtain the distribution of fragment sizes specified above.

3.13 SUBGRADE PREPARATION

3.13.1 Proof Rolling

Finish proof rolling on an exposed subgrade free of surface water (wet conditions resulting from rainfall) which would promote degradation of an otherwise acceptable subgrade. After stripping, proof roll the existing subgrade of the roads with six passes of a dump truck loaded with 4 cubic yards of soil Operate the truck in a systematic manner to ensure the number of passes over all areas, and at speeds between 2-1/2 to 3-1/2 mph. Notify the Contracting Officer a minimum of 3 days prior to proof rolling. Perform proof rolling in the presence of the Contracting Officer. Undercut rutting or pumping of material as directed by the Contracting Officer and replace with select material.

3.13.2 Construction

Shape subgrade to line, grade, and cross section, and compact as specified. Include plowing, disking, and any moistening or aerating required to obtain specified compaction for this operation. Remove soft or otherwise unsatisfactory material and replace with satisfactory excavated material or other approved material as directed. Excavate rock encountered in the cut section to a depth of 6 inches below finished grade for the subgrade. Bring up low areas resulting from removal of unsatisfactory material or excavation of rock to required grade with satisfactory materials, and shape the entire subgrade to line, grade, and cross section and compact as specified. Do not vary the elevation of the finish subgrade more than 0.05 foot from the established grade and cross section.

3.13.3 Compaction

Finish compaction by sheepsfoot rollers, pneumatic-tired rollers, steel-wheeled rollers, vibratory compactors, or other approved equipment.

3.14 FINISHING

Finish the surface of excavations, embankments, and subgrades to a smooth and compact surface in accordance with the lines, grades, and cross sections or elevations shown. Provide the degree of finish for graded areas within 0.1 foot of the grades and elevations indicated except that the degree of finish for subgrades specified in paragraph SUBGRADE PREPARATION. Finish gutters and ditches in a manner that will result in effective drainage. Repair graded or backfilled areas prior to acceptance of the work, and re-established grades to the required elevations and slopes.

3.14.1 Subgrade and Embankments

During construction, keep embankments and excavations shaped and drained. Maintain ditches and drains along subgrade to drain effectively at all times. Do not disturb the finished subgrade by traffic or other operation. Protect and maintain the finished subgrade in a satisfactory condition until ballast or surface course is placed. Do not permit the storage or stockpiling of materials on the finished subgrade. Do not lay ballast or surface course until the subgrade has been checked and approved, and in no case place surface course or ballast on a muddy, spongy, or frozen subgrade.

3.15 TESTING

Perform testing by a Corps validated commercial testing laboratory or the Contractor's validated testing facility. Submit qualifications of the Corps validated commercial testing laboratory or the Contractor's validated testing facilities. If the Contractor elects to establish testing facilities, do not permit work requiring testing until the Contractor's facilities have been inspected, Corps validated and approved by the Contracting Officer.

3.15.1 Fill and Backfill Material Gradation

One test per 500 cubic yards stockpiled or in-place source material. Determine gradation of fill and backfill material in accordance with ASTM C136 .

3.15.2 Moisture Contents

In the stockpile, excavation, or borrow areas, perform a minimum of two tests per day per type of material or source of material being placed during stable weather conditions. During unstable weather, perform tests as dictated by local conditions and approved by the Contracting Officer.

3.15.3 Tolerance Tests for Subgrades

Perform continuous checks on the degree of finish specified in paragraph SUBGRADE PREPARATION during construction of the subgrades.

3.16 DISPOSITION OF SURPLUS MATERIAL

Remove surplus material or other soil material not required or suitable for filling or backfilling, and brush, refuse, stumps, roots, and timber from Government property to an approved location .

-- End of Section --

SECTION 31 11 00

CLEARING AND GRUBBING
08/08

PART 1 GENERAL

1.1 SUBMITTALS

Government approval is required for submittals with a "G" designation; submittals not having a "G" designation are for information only. When used, a designation following the "G" designation identifies the office that will review the submittal for the Government. Submit the following in accordance with Section 01 33 00 SUBMITTAL PROCEDURES:

SD-03 Product Data

Nonsaleable Materials; G

SD-04 Samples

Tree wound paint
Herbicide

1.2 DELIVERY, STORAGE, AND HANDLING

Deliver materials to store at the site, and handle in a manner which will maintain the materials in their original manufactured or fabricated condition until ready for use.

PART 2 PRODUCTS

2.1 TREE WOUND PAINT

Submit samples in cans with manufacturer's label of bituminous based paint of standard manufacture specially formulated for tree wounds.

2.2 HERBICIDE

Comply with Federal Insecticide, Fungicide, and Rodenticide Act (Title 7 U.S.C. Section 136) for requirements on Contractor's licensing, certification and record keeping. Contact the command Pest Control Coordinator prior to starting work. Submit samples in cans with manufacturer's label.

PART 3 EXECUTION

3.1 PROTECTION

3.1.1 Roads and Walks

Keep roads and walks free of dirt and debris at all times.

3.1.2 Trees, Shrubs, and Existing Facilities

Protect trees and vegetation to be left standing from damage incident to clearing, grubbing, and construction operations by the erection of barriers

or by such other means as the circumstances require.

3.1.3 Utility Lines

Protect existing utility lines that are indicated to remain from damage. Notify the Contracting Officer immediately of damage to or an encounter with an unknown existing utility line. The Contractor is responsible for the repairs of damage to existing utility lines that are indicated or made known to the Contractor prior to start of clearing and grubbing operations. When utility lines which are to be removed are encountered within the area of operations, notify the Contracting Officer in ample time to minimize interruption of the service.

3.2 CLEARING

Clearing shall consist of the felling, trimming, and cutting of trees into sections and the satisfactory disposal of the trees and other vegetation designated for removal, including downed timber, snags, brush, and rubbish occurring within the areas to be cleared. Trees, stumps, roots, brush, and other vegetation in areas to be cleared shall be cut off flush with or below the original ground surface, except such trees and vegetation as may be indicated or directed to be left standing. Trees designated to be left standing within the cleared areas shall be trimmed of dead branches 1-1/2 inches or more in diameter and shall be trimmed of all branches the heights indicated or directed. Limbs and branches to be trimmed shall be neatly cut close to the bole of the tree or main branches. Cuts more than 1-1/2 inches in diameter shall be painted with an approved tree-wound paint. Apply herbicide in accordance with the manufacturer's label to the top surface of stumps designated not to be removed.

3.3 TREE REMOVAL

Where indicated or directed, trees and stumps that are designated as trees shall be removed from areas outside those areas designated for clearing and grubbing. This work shall include the felling of such trees and the removal of their stumps and roots as specified in paragraph GRUBBING. Trees shall be disposed of as specified in paragraph DISPOSAL OF MATERIALS.

3.4 PRUNING

Trim trees designated to be left standing within the cleared areas of dead branches 1-1/2 inches or more in diameter; and trim branches to heights and in a manner as indicated. Neatly cut limbs and branches to be trimmed close to the bole of the tree or main branches. Paint cuts more than 1-1/4 inches in diameter with an approved tree wound paint.

3.5 GRUBBING

Grubbing consists of the removal and disposal of stumps, roots larger than 3 inches in diameter, and matted roots from the designated grubbing areas. Remove material to be grubbed, together with logs and other organic or metallic debris not suitable for foundation purposes, to a depth of not less than 18 inches below the original surface level of the ground in areas indicated to be grubbed and in areas indicated as construction areas under this contract, such as areas for buildings, and areas to be paved. Fill depressions made by grubbing with suitable material and compact to make the surface conform with the original adjacent surface of the ground.

3.6 DISPOSAL OF MATERIALS

3.6.1 Saleable Timber

All timber on the project site noted for clearing shall ~~become the property of the Contractor, and shall be removed from the project site and disposed of off stations.~~

3.6.2 Nonsaleable Materials

Written permission to dispose of such products on private property shall be filed with the Contracting Officer. Logs, stumps, roots, brush, rotten wood, and other refuse from the clearing and grubbing operations, except for salable timber, shall be disposed of outside the limits of Government-controlled land at the Contractor's responsibility , except when otherwise directed in writing. Such directive will state the conditions covering the disposal of such products and will also state the areas in which they may be placed.

-- End of Section --

SECTION 31 23 00.00 20

EXCAVATION AND FILL
02/11

PART 1 GENERAL

1.1 REFERENCES

The publications listed below form a part of this specification to the extent referenced. The publications are referred to in the text by the basic designation only.

AMERICAN WATER WORKS ASSOCIATION (AWWA)

AWWA C600	(2010) Installation of Ductile-Iron Water Mains and Their Appurtenances

ASTM INTERNATIONAL (ASTM)

ASTM C136	(2006) Standard Test Method for Sieve Analysis of Fine and Coarse Aggregates
ASTM C33/C33M	(2013) Standard Specification for Concrete Aggregates
ASTM D1140	(2000; R 2006) Amount of Material in Soils Finer than the No. 200 (75-micrometer) Sieve
ASTM D1556	(2007) Density and Unit Weight of Soil in Place by the Sand-Cone Method
ASTM D1557	(2012) Standard Test Methods for Laboratory Compaction Characteristics of Soil Using Modified Effort (56,000 ft-lbf/ft3) (2700 kN-m/m3)
ASTM D2321	(2011) Standard Practice for Underground Installation of Thermoplastic Pipe for Sewers and Other Gravity-Flow Applications
ASTM D2487	(2011) Soils for Engineering Purposes (Unified Soil Classification System)
ASTM D4318	(2010; E 2014) Liquid Limit, Plastic Limit, and Plasticity Index of Soils
ASTM D6938	(2010) Standard Test Method for In-Place Density and Water Content of Soil and Soil-Aggregate by Nuclear Methods (Shallow Depth)
ASTM D698	(2012; E 2014) Laboratory Compaction Characteristics of Soil Using Standard Effort (12,400 ft-lbf/cu. ft. (600 kN-m/cu. m.))

U.S. ENVIRONMENTAL PROTECTION AGENCY (EPA)

EPA SW-846.3-3	(1999, Third Edition, Update III-A) Test Methods for Evaluating Solid Waste: Physical/Chemical Methods

1.2 DEFINITIONS

1.2.1 Degree of Compaction

Degree of compaction is expressed as a percentage of the maximum density obtained by the test procedure presented in ASTM D1557, for general soil types, abbreviated as percent laboratory maximum density.

1.2.2 Hard Materials

Weathered rock, dense consolidated deposits, or conglomerate materials which are not included in the definition of "rock" but which usually require the use of heavy excavation equipment, ripper teeth, or jack hammers for removal.

1.2.3 Rock

Solid homogeneous interlocking crystalline material with firmly cemented, laminated, or foliated masses or conglomerate deposits, neither of which can be removed without systematic drilling and blasting, drilling and the use of expansion jacks or feather wedges, or the use of backhoe-mounted pneumatic hole punchers or rock breakers; also large boulders, buried masonry, or concrete other than pavement exceeding 1/2 cubic yard in volume. Removal of hard material will not be considered rock excavation because of intermittent drilling and blasting that is performed merely to increase production.

1.3 SUBMITTALS

Government approval is required for submittals with a "G" designation; submittals not having a "G" designation are for information only. When used, a designation following the "G" designation identifies the office that will review the submittal for the Government. The following shall be submitted in accordance with Section 01 33 00 SUBMITTAL PROCEDURES:

SD-01 Preconstruction Submittals

Dewatering work plan

Blasting work plan

Submit 15 days prior to starting work.

SD-06 Test Reports

Borrow Site Testing; G

Fill and backfill test

Select material test

Porous fill test for capillary water barrier

Density tests

Moisture Content Tests

Copies of all laboratory and field test reports within 24 hours of the completion of the test.

1.4 DELIVERY, STORAGE, AND HANDLING

Perform in a manner to prevent contamination or segregation of materials.

1.5 CRITERIA FOR BIDDING

Base bids on the following criteria:

a. Surface elevations are as indicated.

b. Pipes or other artificial obstructions, except those indicated, will not be encountered.

d. Ground water conditions and elevations are unknown.

f. Hard materials and rock will be encountered in excavations.

h. Blasting will not be permitted. Remove material in an approved manner.

1.6 REQUIREMENTS FOR OFF SITE SOIL

Soils brought in from off site for use as backfill shall be tested for petroleum hydrocarbons, BTEX, PCBs and HW characteristics (including toxicity, ignitability, corrosivity, and reactivity). Backfill shall not contain concentrations of these analytes above the appropriate State and/or EPA criteria, and shall pass the tests for HW characteristics. Determine petroleum hydrocarbon concentrations by using appropriate State protocols. Determine BTEX concentrations by using EPA SW-846.3-3 Method 5035/8260B. Perform complete TCLP in accordance with EPA SW-846.3-3 Method 1311. Perform HW characteristic tests for ignitability, corrosivity, and reactivity in accordance with accepted standard methods. Perform PCB testing in accordance with accepted standard methods for sampling and analysis of bulk solid samples. Provide borrow site testing for petroleum hydrocarbons and BTEX from a grab sample of material from the area most likely to be contaminated at the borrow site (as indicated by visual or olfactory evidence), with at least one test from each borrow site. For each borrow site, provide borrow site testing for HW characteristics from a composite sample of material, collected in accordance with standard soil sampling techniques. Do not bring material onsite until tests results have been received and approved by the Contracting Officer.

1.7 QUALITY ASSURANCE

1.7.1 Dewatering Work Plan

Submit procedures for accomplishing dewatering work.

1.7.2 Utilities

Movement of construction machinery and equipment over pipes and utilities during construction shall be at the Contractor's risk. Perform work

adjacent to non-Government utilities as indicated in accordance with procedures outlined by utility company. Report damage to utility lines or subsurface construction immediately to the Contracting Officer.

PART 2 PRODUCTS

2.1 SOIL MATERIALS

2.1.1 Satisfactory Materials

Any materials classified by ASTM D2487 as GW, GP, GM, GP-GM, GW-GM, GC, GP-GC, GM-GC, SW, and SP, free of debris, roots, wood, scrap material, vegetation, refuse, soft unsound particles, and frozen, deleterious, or objectionable materials. Unless specified otherwise, the maximum particle diameter shall be one-half the lift thickness at the intended location.

2.1.2 Unsatisfactory Materials

Materials which do not comply with the requirements for satisfactory materials. Unsatisfactory materials also include man-made fills, trash, refuse, or backfills from previous construction. Unsatisfactory material also includes material classified as satisfactory which contains root and other organic matter, frozen material, and stones larger than 6 inches. The Contracting Officer shall be notified of any contaminated materials.

2.1.3 Cohesionless and Cohesive Materials

Cohesionless materials include materials classified in ASTM D2487 as GW, GP, SW, and SP. Cohesive materials include materials classified as GC, SC, ML, CL, MH, and CH. Materials classified as GM, GP-GM, GW-GM, SW-SM, SP-SM, and SM shall be identified as cohesionless only when the fines are nonplastic (plasticity index equals zero). Materials classified as GM and SM will be identified as cohesive only when the fines have a plasticity index greater than zero.

2.1.4 Common Fill

Approved, unclassified soil material with the characteristics required to compact to the soil density specified for the intended location.

2.1.5 Backfill and Fill Material

ASTM D2487, classification GW, GP, GM, SW, SP, SM, with a maximum ASTM D4318 liquid limit of 35 , maximum ASTM D4318 plasticity index of 12 , and a maximum of 25 percent by weight passing ASTM D1140, No. 200 sieve.

2.1.6 Select Material

Provide materials classified as GW, GP, SW, SP by ASTM D2487 where indicated.

2.1.7 Topsoil

Natural, friable soil representative of productive, well-drained soils in the area, free of subsoil, stumps, rocks larger than one inch diameter, brush, weeds, toxic substances, and other material detrimental to plant growth. Amend topsoil pH range to obtain a pH of 5.5 to 7.

2.2 UTILITY BEDDING MATERIAL

Except as specified otherwise in the individual piping section, provide bedding for buried piping in accordance with AWWA C600, Type 4, except as specified herein. Backfill to top of pipe shall be compacted to 95 percent of ASTM D698 maximum density. Plastic piping shall have bedding to spring line of pipe. Provide ASTM D2321 materials as follows:

a. Class I: Angular, 0.25 to 1.5 inches, graded stone, including a number of fill materials that have regional significance such as coral, slag, cinders, crushed stone, and crushed shells.

b. Class II: Coarse sands and gravels with maximum particle size of 1.5 inches, including various graded sands and gravels containing small percentages of fines, generally granular and noncohesive, either wet or dry. Soil Types GW, GP, SW, and SP are included in this class as specified in ASTM D2487.

2.3 BORROW

Obtain borrow materials required in excess of those furnished from excavations from sources outside of Government property.

2.4 MATERIAL FOR RIP-RAP

Bedding material and rock conforming to these requirements State Standard for construction indicated.

2.4.1 Bedding Material

Consisting of sand, gravel, or crushed rock, well graded, or poorly graded with a maximum particle size of 2 inches. Material shall be composed of tough, durable particles. Fines passing the No. 200 standard sieve shall have a plasticity index less than six.

2.4.2 Rock

Rock fragments sufficiently durable to ensure permanence in the structure and the environment in which it is to be used. Rock fragments shall be free from cracks, seams, and other defects that would increase the risk of deterioration from natural causes. The size of the fragments shall be such that no individual fragment exceeds a weight of 150 pounds and that no more than 10 percent of the mixture, by weight, consists of fragments weighing 2 pounds or less each. Specific gravity of the rock shall be a minimum of 2.50 . The inclusion of more than trace 1 percent quantities of dirt, sand, clay, and rock fines will not be permitted.

PART 3 EXECUTION

3.1 PROTECTION

3.1.1 Drainage and Dewatering

Provide for the collection and disposal of surface and subsurface water encountered during construction.

3.1.1.1 Drainage

So that construction operations progress successfully, completely drain construction site during periods of construction to keep soil materials sufficiently dry. The Contractor shall establish/construct storm drainage features (ponds/basins) at the earliest stages of site development, and throughout construction grade the construction area to provide positive surface water runoff away from the construction activity and/or provide temporary ditches, swales, and other drainage features and equipment as required to maintain dry soils and prevent erosion. When unsuitable working platforms for equipment operation and unsuitable soil support for subsequent construction features develop, remove unsuitable material and provide new soil material as specified herein. It is the responsibility of the Contractor to assess the soil and ground water conditions presented by the plans and specifications and to employ necessary measures to permit construction to proceed. Excavated slopes and backfill surfaces shall be protected to prevent erosion and sloughing. Excavation shall be performed so that the site, the area immediately surrounding the site, and the area affecting operations at the site shall be continually and effectively drained.

3.1.1.2 Dewatering

Groundwater flowing toward or into excavations shall be controlled to prevent sloughing of excavation slopes and walls, boils, uplift and heave in the excavation and to eliminate interference with orderly progress of construction.

3.1.2 Underground Utilities

Location of the existing utilities indicated is approximate. The Contractor shall physically verify the location and elevation of the existing utilities indicated prior to starting construction.

3.1.3 Machinery and Equipment

Movement of construction machinery and equipment over pipes during construction shall be at the Contractor's risk. Repair, or remove and provide new pipe for existing or newly installed pipe that has been displaced or damaged.

3.2 SURFACE PREPARATION

3.2.1 Clearing and Grubbing

Unless indicated otherwise, remove trees, stumps, logs, shrubs, brush and vegetation and other items that would interfere with construction operations within the clearing limits . Remove stumps entirely. Grub out matted roots and roots over 2 inches in diameter to at least 18 inches below existing surface.

3.2.2 Stripping

Strip suitable soil from the site where excavation or grading is indicated and stockpile separately from other excavated material. Material unsuitable for use as topsoil shall be wasted . Locate topsoil so that the material can be used readily for the finished grading. Where sufficient existing topsoil conforming to the material requirements is not available on site, provide borrow materials suitable for use as topsoil. Protect

topsoil and keep in segregated piles until needed.

3.2.3 Unsuitable Material

Remove vegetation, debris, decayed vegetable matter, sod, mulch, and rubbish underneath paved areas or concrete slabs.

3.3 EXCAVATION

Excavate to contours, elevation, and dimensions indicated. Reuse excavated materials that meet the specified requirements for the material type required at the intended location. Keep excavations free from water. Excavate soil disturbed or weakened by Contractor's operations, soils softened or made unsuitable for subsequent construction due to exposure to weather. Excavations below indicated depths will not be permitted except to remove unsatisfactory material. Unsatisfactory material encountered below the grades shown shall be removed as directed. Refill with satisfactory material and compact to 95 percent of ASTM D1557 maximum density. Unless specified otherwise, refill excavations cut below indicated depth with satisfactory material and compact to 95 percent of ASTM D1557 maximum density. Satisfactory material removed below the depths indicated, without specific direction of the Contracting Officer, shall be replaced with satisfactory materials to the indicated excavation grade; except as specified for spread footings. Determination of elevations and measurements of approved overdepth excavation of unsatisfactory material below grades indicated shall be done under the direction of the Contracting Officer.

3.3.1 Structures With Spread Footings

Ensure that footing subgrades have been inspected and approved by the Contracting Officer prior to concrete placement. Fill over excavations with concrete during foundation placement.

3.3.2 Pile Cap Excavation and Backfilling

Excavate to bottom of pile cap prior to placing or driving piles, unless authorized otherwise by the Contracting Officer. Backfill and compact overexcavations and changes in grade due to pile driving operations to 95 percent of ASTM D698 maximum density.

3.3.3 Pipe Trenches

Excavate to the dimension indicated. Grade bottom of trenches to provide uniform support for each section of pipe after pipe bedding placement. Tamp if necessary to provide a firm pipe bed. Recesses shall be excavated to accommodate bells and joints so that pipe will be uniformly supported for the entire length. Rock, where encountered, shall be excavated to a depth of at least 6 inches below the bottom of the pipe.

3.3.4 Hard Material and Rock Excavation

Remove hard material and rock to elevations indicated in a manner that will leave foundation material in an unshattered and solid condition. Roughen level surfaces and cut sloped surfaces into benches for bond with concrete. Protect shale from conditions causing decomposition along joints or cleavage planes and other types of erosion. Removal of hard material and rock beyond lines and grades indicated will not be grounds for a claim for additional payment unless previously authorized by the Contracting

Officer. Excavation of the material claimed as rock shall not be performed until the material has been cross sectioned by the Contractor and approved by the Contracting Officer. Common excavation shall consist of all excavation not classified as rock excavation.

3.3.5 Excavated Materials

Satisfactory excavated material required for fill or backfill shall be placed in the proper section of the permanent work required or shall be separately stockpiled if it cannot be readily placed. Satisfactory material in excess of that required for the permanent work and all unsatisfactory material shall be disposed of as specified in Paragraph "DISPOSITION OF SURPLUS MATERIAL."

3.3.6 Final Grade of Surfaces to Support Concrete

Excavation to final grade shall not be made until just before concrete is to be placed. Only excavation methods that will leave the foundation rock in a solid and unshattered condition shall be used. Approximately level surfaces shall be roughened, and sloped surfaces shall be cut as indicated into rough steps or benches to provide a satisfactory bond. Shales shall be protected from slaking and all surfaces shall be protected from erosion resulting from ponding or flow of water.

3.4 SUBGRADE PREPARATION

Unsatisfactory material in surfaces to receive fill or in excavated areas shall be removed and replaced with satisfactory materials as directed by the Contracting Officer. The surface shall be scarified to a depth of 6 inches before the fill is started. Sloped surfaces steeper than 1 vertical to 4 horizontal shall be plowed, stepped, benched, or broken up so that the fill material will bond with the existing material. When subgrades are less than the specified density, the ground surface shall be broken up to a minimum depth of 6 inches, pulverized, and compacted to the specified density. When the subgrade is part fill and part excavation or natural ground, the excavated or natural ground portion shall be scarified to a depth of 12 inches and compacted as specified for the adjacent fill. Material shall not be placed on surfaces that are muddy, frozen, or contain frost. Compaction shall be accomplished by sheepsfoot rollers, pneumatic-tired rollers, steel-wheeled rollers, or other approved equipment well suited to the soil being compacted. Material shall be moistened or aerated as necessary . Minimum subgrade density shall be as specified herein.

3.4.1 Proof Rolling

Proof rolling shall be done on an exposed subgrade free of surface water (wet conditions resulting from rainfall) which would promote degradation of an otherwise acceptable subgrade. After stripping, proof roll the existing subgrade of the access road with six passes of a dump truck loaded with 212 cubic feet of soil Operate the truck in a systematic manner to ensure the number of passes over all areas, and at speeds between 2 1/2 to 3 1/2 miles per hour. Notify the Contracting Officer a minimum of 3 days prior to proof rolling. Proof rolling shall be performed in the presence of the Contracting Officer. Rutting or pumping of material shall be undercut as directed by the Contracting Officer and replaced with select material.

3.5 FILLING AND BACKFILLING

Fill and backfill to contours, elevations, and dimensions indicated. Compact each lift before placing overlaying lift.

3.5.1 Common Fill Placement

Provide for general site .Use satisfactory materials. Place in 6 inch lifts. Compact areas not accessible to rollers or compactors with mechanical hand tampers. Aerate material excessively moistened by rain to a satisfactory moisture content. Finish to a smooth surface by blading, rolling with a smooth roller, or both.

3.5.2 Select Material Placement

Provide under structures not pile supported. Place in 6 inch lifts. Do not place over wet or frozen areas. Backfill adjacent to structures shall be placed as structural elements are completed and accepted. Backfill against concrete only when approved. Place and compact material to avoid loading upon or against structure.

3.5.3 Backfill and Fill Material Placement Over Pipes and at Walls

Backfilling shall not begin until construction below finish grade has been approved, underground utilities systems have been inspected, tested and approved, forms removed, and the excavation cleaned of trash and debris. Backfill shall be brought to indicated finish grade . Where pipe is coated or wrapped for protection against corrosion, the backfill material up to an elevation 2 feet above sewer lines and 1 foot above other utility lines shall be free from stones larger than 1 inch in any dimension. Heavy equipment for spreading and compacting backfill shall not be operated closer to foundation or retaining walls than a distance equal to the height of backfill above the top of footing; the area remaining shall be compacted in layers not more than 4 inches in compacted thickness with power-driven hand tampers suitable for the material being compacted. Backfill shall be placed carefully around pipes or tanks to avoid damage to coatings, wrappings, or tanks. Backfill shall not be placed against foundation walls prior to 7 days after completion of the walls. As far as practicable, backfill shall be brought up evenly on each side of the wall and sloped to drain away from the wall.

3.5.4 Porous Fill Placement

Provide under floor and area-way slabs on a compacted subgrade. Place in 4 inch lifts with a minimum of two passes of a hand-operated plate-type vibratory compactor.

3.5.5 Trench Backfilling

Backfill as rapidly as construction, testing, and acceptance of work permits. Place and compact backfill under structures and paved areas in 6 inch lifts to top of trench and in 6 inch lifts to one foot over pipe outside structures and paved areas.

3.6 BORROW

Where satisfactory materials are not available in sufficient quantity from required excavations, approved borrow materials shall be obtained as specified herein.

3.7 BURIED WARNING AND IDENTIFICATION TAPE

Provide buried utility lines with utility identification tape. Bury tape 12 inches below finished grade; under pavements and slabs, bury tape 6 inches below top of subgrade.

3.8 BURIED DETECTION WIRE

Bury detection wire directly above non-metallic piping at a distance not to exceed 12 inches above the top of pipe. The wire shall extend continuously and unbroken, from manhole to manhole. The ends of the wire shall terminate inside the manholes at each end of the pipe, with a minimum of 3 feet of wire, coiled, remaining accessible in each manhole. The wire shall remain insulated over it's entire length. The wire shall enter manholes between the top of the corbel and the frame, and extend up through the chimney seal between the frame and the chimney seal. For force mains, the wire shall terminate in the valve pit at the pump station end of the pipe.

3.9 COMPACTION

Determine in-place density of existing subgrade; if required density exists, no compaction of existing subgrade will be required.

3.9.1 General Site

Compact underneath areas designated for vegetation and areas outside the 5 foot line of the paved area or structure to 90 percent of ASTM D1557.

3.9.2 Structures, Spread Footings, and Concrete Slabs

Compact top 12 inches of subgrades to 95 percent of ASTM D1557. Compact common fill select material to 95 percent of ASTM D1557.

3.10 RIP-RAP CONSTRUCTION

Construct rip-rap on bedding material in accordance with DOT State Standards in the areas indicated.

3.10.1 Preparation

Trim and dress indicated areas to conform to cross sections, lines and grades shown within a tolerance of 0.1 foot.

3.10.2 Bedding Placement

Spread bedding material uniformly to a thickness of at least 12 inches on prepared subgrade as indicated. Compaction of bedding is not required. Finish bedding to present even surface free from mounds and windrows.

3.10.3 Stone Placement

Place rock for rip-rap on prepared bedding material to produce a well graded mass with the minimum practicable percentage of voids in conformance with lines and grades indicated. Distribute larger rock fragments, with dimensions extending the full depth of the rip-rap throughout the entire mass and eliminate "pockets" of small rock fragments. Rearrange individual pieces by mechanical equipment or by hand as necessary to obtain the distribution of fragment sizes specified above.

3.11 FINISH OPERATIONS

3.11.1 Grading

Finish grades as indicated within one-tenth of one foot. Grade areas to drain water away from structures. Maintain areas free of trash and debris. For existing grades that will remain but which were disturbed by Contractor's operations, grade as directed.

3.11.2 Topsoil and Seed

Provide as specified in Section 32 92 19 SEEDING.

3.11.3 Protection of Surfaces

Protect newly backfilled, graded, and topsoiled areas from traffic, erosion, and settlements that may occur. Repair or reestablish damaged grades, elevations, or slopes.

3.12 DISPOSITION OF SURPLUS MATERIAL

Waste in Government disposal area Remove from Government property surplus or other soil material not required or suitable for filling or backfilling, and brush, refuse, stumps, roots, and timber.

3.13 FIELD QUALITY CONTROL

3.13.1 Sampling

Take the number and size of samples required to perform the following tests.

3.13.2 Testing

Perform one of each of the following tests for each material used. Provide additional tests for each source change.

3.13.2.1 Fill and Backfill Material Testing

Test fill and backfill material in accordance with ASTM C136 for conformance to ASTM D2487 gradation limits; ASTM D1140 for material finer than the No. 200 sieve; ASTM D4318 for liquid limit and for plastic limit; ASTM D698 or ASTM D1557 for moisture density relations, as applicable.

3.13.2.2 Select Material Testing

Test select material in accordance with ASTM C136 for conformance to ASTM D2487 gradation limits; ASTM D1140 for material finer than the No. 200 sieve; ASTM D698 or ASTM D1557 for moisture density relations, as applicable.

3.13.2.3 Porous Fill Testing

Test porous fill in accordance with ASTM C136 for conformance to gradation specified in ASTM C33/C33M.

3.13.2.4 Density Tests

Test density in accordance with ASTM D1556, or ASTM D6938. When ASTM D6938 density tests are used, verify density test results by performing an ASTM D1556 density test at a location already ASTM D6938 tested as specified herein. Perform an ASTM D1556 density test at the start of the job, and for every 10 ASTM D6938 density tests thereafter. Test each lift at randomly selected locations every 2000 square feet of existing grade in fills for structures and concrete slabs, and every 2500 square feet for other fill areas and every 2000 square feet of subgrade in cut. Include density test results in daily report.

Bedding and backfill in trenches: One test per 50 linear feet in each lift.

-- End of Section --

SECTION 31 32 11

SOIL SURFACE EROSION CONTROL

08/08

PART 1 GENERAL

1.1 SUMMARY

The work consists of furnishing and installing temporary and permanent soil surface erosion control materials to prevent the pollution of air, water, and land, including fine grading, blanketing, stapling, mulching, vegetative measures, structural measures, and miscellaneous related work, within project limits and in areas outside the project limits where the soil surface is disturbed from work under this contract at the designated locations. This work includes all necessary materials, labor, supervision and equipment for installation of a complete system. Submit a listing of equipment to be used for the application of erosion control materials. Coordinate this section with the requirements of Section 31 00 00 EARTHWORK . Complete backfilling the openings in synthetic grid systems and articulating cellular concrete block systems a maximum 7 days after placement to protect the material from ultraviolet radiation.

1.2 MEASUREMENT AND PAYMENT

1.2.1 Standard and Geosynthetic Binder

Measure the standard and geosynthetic binder by the square yard of surface area covered. No measurement for payment will be made for fine grading, trenching or other miscellaneous materials necessary for placement of the binder.

1.2.2 Mulch and Compost

Measure mulch and compost by the square yard of surface area covered. No measurement for payment will be made for binder, dye or other miscellaneous materials or equipment necessary for placement of the mulch or compost.

1.2.3 Hydraulic Mulch

Measure hydraulic mulch by the square yard of surface area covered. Measurement for payment will include binder, dye or both. No measurement for payment will be made for other miscellaneous materials or equipment necessary for placement of the hydraulic mulch.

1.2.4 Geotextile Fabric

Measure geotextile fabrics by the square yard of surface area covered. No measurement for payment will be made for fine grading, trenching or other miscellaneous materials necessary for placement of the fabric.

1.2.5 Erosion Control Blankets

Measure erosion control blankets by the square yard of surface area covered. No measurement for payment will be made for fine grading, trenching or other miscellaneous materials necessary for placement of the

erosion control blankets.

1.2.6 Synthetic Grid/Sheet Systems

Measure synthetic grid/sheet system by the square yard of surface area covered. No measurement for payment will be made for fine grading, trenching, geotextile, seams, grout, rock, topsoil or other miscellaneous materials necessary for placement of the articulating cellular concrete block system.

1.2.7 Cellular Concrete Block Systems

Measure articulating cellular concrete block system by the square yard of surface area covered. No measurement for payment will be made for fine grading, trenching, geotextile, seams, grout, rock, topsoil or other miscellaneous materials necessary for placement of the articulating cellular concrete block system.

1.3 REFERENCES

The publications listed below form a part of this specification to the extent referenced. The publications are referred to within the text by the basic designation only.

ASTM INTERNATIONAL (ASTM)

ASTM C140/C140M	(2013a) Standard Test Methods for Sampling and Testing Concrete Masonry Units and Related Units
ASTM C39/C39M	(2014) Standard Test Method for Compressive Strength of Cylindrical Concrete Specimens
ASTM C42/C42M	(2013) Standard Test Method for Obtaining and Testing Drilled Cores and Sawed Beams of Concrete
ASTM D1248	(2012) Standard Specification for Polyethylene Plastics Extrusion Materials for Wire and Cable
ASTM D1560	(2009a) Resistance to Deformation and Cohesion of Bituminous Mixtures by Means of Hveem Apparatus
ASTM D1777	(1996; E 2011; R 2011) Thickness of Textile Materials
ASTM D2028/D2028M	(2010) Cutback Asphalt (Rapid-Curing Type)
ASTM D2844/D2844M	(2013) Resistance R-Value and Expansion Pressure of Compacted Soils
ASTM D3776/D3776M	(2009a; R 2013) Standard Test Method for Mass Per Unit Area (Weight) of Fabric
ASTM D3787	(2007; R 2011) Bursting Strength of Textiles - Constant-Rate-of-Traverse

	(CRT), Ball Burst Test
ASTM D3884	(2009; R 2013) Abrasion Resistance of Textile Fabrics (Rotary Platform, Double-Head Method)
ASTM D4355	(2007) Deterioration of Geotextiles from Exposure to Light, Moisture and Heat in a Xenon-Arc Type Apparatus
ASTM D4491	(1999a; R 2014; E 2014) Water Permeability of Geotextiles by Permittivity
ASTM D4533	(2011) Trapezoid Tearing Strength of Geotextiles
ASTM D4595	(2011) Tensile Properties of Geotextiles by the Wide-Width Strip Method
ASTM D4632/D4632M	(2008; E 2013; R 2013) Grab Breaking Load and Elongation of Geotextiles
ASTM D4751	(2012) Determining Apparent Opening Size of a Geotextile
ASTM D4833/D4833M	(2007; E 2013; R 2013) Index Puncture Resistance of Geotextiles, Geomembranes, and Related Products
ASTM D4972	(2013) pH of Soils
ASTM D5035	(2011) Breaking Force and Elongation of Textile Fabrics (Strip Method)
ASTM D5268	(2013) Topsoil Used for Landscaping Purposes
ASTM D5852	(2000; R 2007) Standard Test Method for Erodibility Determination of Soil in the Field or in the Laboratory by the Jet Index Method
ASTM D648	(2007) Deflection Temperature of Plastics Under Flexural Load in the Edgewise Position
ASTM D6629	(2001; E 2012; R 2012) Selection of Methods for Estimating Soil Loss by Erosion
ASTM D698	(2012; E 2014) Laboratory Compaction Characteristics of Soil Using Standard Effort (12,400 ft-lbf/cu. ft. (600 kN-m/cu. m.))
ASTM D977	(2013; E 2014) Emulsified Asphalt

U.S. DEPARTMENT OF AGRICULTURE (USDA)

AMS Seed Act	(1940; R 1988; R 1998) Federal Seed Act

U.S. GREEN BUILDING COUNCIL (USGBC)

LEED GBDC	(2009) LEED Reference Guide for Green Building Design and Construction
LEED NC	(2009) Leadership in Energy and Environmental Design(tm) New Construction Rating System

1.4 SUBMITTALS

Government approval is required for submittals with a "G" designation; submittals not having a "G" designation are for information only. When used, a designation following the "G" designation identifies the office that will review the submittal for the Government. Submit the following in accordance with Section 01 33 00 SUBMITTAL PROCEDURES:

SD-01 Preconstruction Submittals

Work sequence schedule; G
Erosion control plan; G ; (LEED NC)

SD-02 Shop Drawings

Layout; G
Obstructions Below Ground; G
Seed Establishment Period
Maintenance Record

SD-03 Product Data

Geosynthetic Binders
Recycled Plastic; (LEED NC)
Wood Cellulose Fiber; (LEED NC)
Paper Fiber; (LEED NC)
Mulch Control Netting and Filter Fabric; (LEED NC)
Hydraulic Mulch
Erosion Control Blankets Type XI; (LEED NC)
Geotextile Fabrics
Aggregate; (LEED NC)
Synthetic Grid Systems
Articulating Cellular Concrete Block Systems
Equipment
Finished Grade
Erosion Control Blankets

Submit manufacturer's literature including physical characteristics, application and installation instructions. Documentation indicating percentage of post-industrial and post-consumer recycled content per unit of product. Indicate relative dollar value of recycled content products to total dollar value of products included in project.

SD-04 Samples

In addition to the samples, submit certification of recycled content or Statement of recycled content. Also submit certification of origin including the name, address and telephone

number of manufacturer.

Geosynthetic binders

1 quart

Mulch

2 pounds

Hydraulic mulch

2 pounds

Geotextile fabrics

6 inch square

Erosion control blankets

6 inch square

Synthetic grid systems

One sample grid

Articulating Cellular Concrete Block Systems

100 square feet area sample and two color charts displaying the colors and finishes.

SD-06 Test Reports

Geosynthetic Binders
Hydraulic Mulch
Geotextile Fabrics
Erosion Control Blankets
Synthetic Grid Systems
Articulating Cellular Concrete Block Systems
Compressive Strength Testing
Sand
Gravel

SD-07 Certificates

Fill Material
Mulch
Hydraulic Mulch
Geotextile Fabrics
Geosynthetic Binders
Synthetic Soil Binders
Installer's Qualification
Recycled Plastic
Seed
Asphalt Adhesive
Tackifier
Wood By-Products
Wood Cellulose Fiber

SD-10 Operation and Maintenance Data

Maintenance Instructions

SD-11 Closeout Submittals

Local/Regional Materials; (LEED)
Recycled Plastic; (LEED)
Wood Cellulose Fiber; (LEED)
Paper Fiber; (LEED)
Mulch Control Netting and Filter Fabric; (LEED)
Hydraulic Mulch; G (LEED)
Erosion Control Blankets Type XI; (LEED)
Geotextile Fabrics; G (LEED)
Aggregate; (LEED)

1.5 QUALITY ASSURANCE

1.5.1 Installer's Qualification

The installer shall be certified by the manufacturer for training and experience installing the material. Submit the installer's company name and address, and/or certification.

1.5.2 Erosion Potential

Assess potential effects of soil management practices on soil loss in accordance with ASTM D6629. Assess erodibility of soil with dominant soil structure less than 2.8 to 3.1 inches in accordance with ASTM D5852.

1.5.3 Substitutions

Substitutions will not be allowed without written request and approval from the Contracting Officer.

1.5.4 SUSTAINABLE DESIGN REQUIREMENTS

1.5.4.1 Local/Regional Materials

Use materials or products extracted, harvested, or recovered, as well as manufactured, within a 500 mile radius from the project site, if available from a minimum of three sources. Submit LEED documentation relative to local/regional materials credit in accordance with LEED GBDC. Submit documentation indicating distance between manufacturing facility and the project site. Indicate distance of raw material origin from the project site. Indicate relative dollar value of local/regional materials to total dollar value of products included in project.

1.5.4.2 Biobased Materials

Use biobased materials when feasible and as specified. Submit documentation indicating type of biobased material in product and biobased content.

1.6 DELIVERY, STORAGE, AND HANDLING

Prior to delivery of materials, submit certificates of compliance attesting that materials meet the specified requirements. Store materials in designated areas and as recommended by the manufacturer protected from the

elements, direct exposure, and damage. Do not drop containers from trucks. Material shall be free of defects that would void required performance or warranty. Deliver geosynthetic binders and synthetic soil binders in the manufacturer's original sealed containers and stored in a secure area.

a. Furnish erosion control blankets and geotextile fabric in rolls with suitable wrapping to protect against moisture and extended ultraviolet exposure prior to placement. Label erosion control blanket and geotextile fabric rolls to provide identification sufficient for inventory and quality control purposes.

b. All synthetic grids, synthetic sheets, and articulating cellular concrete block grids shall be sound and free of defects that would interfere with the proper placing of the block or impair the strength or permanence of the construction. Minor cracks in synthetic grids and concrete cellular block, incidental to the usual methods of manufacture, or resulting from standard methods of handling in shipment and delivery, will not be deemed grounds for rejection.

c. Inspect seed upon arrival at the jobsite for conformity to species and quality. Seed that is wet, moldy, or bears a test date five months or older, shall be rejected.

1.7 SCHEDULING

Submit a construction work sequence schedule, with the approved erosion control plan a minimum of 30 days prior to start of construction. The work schedule shall coordinate the timing of land disturbing activities with the provision of erosion control measures to reduce on-site erosion and off-site sedimentation. Coordinate installation of temporary erosion control features with the construction of permanent erosion control features to assure effective and continuous control of erosion, pollution, and sediment deposition. Include a vegetative plan with planting and seeding dates and fertilizer, lime, and mulching rates. Distribute copies of the work schedule and erosion control plan to site subcontractors. Address the following in the erosion control plan:

a. Statement of erosion control and stormwater control objectives.

b. Description of temporary and permanent erosion control, stormwater control, and air pollution control measures to be implemented on site.

c. Description of the type and frequency of maintenance activities required for the chosen erosion control methods.

d. Comparison of proposed post-development stormwater runoff conditions with predevelopment conditions.

1.8 WARRANTY

Erosion control material shall have a warranty for use and durable condition for project specific installations. Temporary erosion control materials shall carry a minimum eighteen month warranty. Permanent erosion control materials shall carry a minimum three year warranty.

PART 2 PRODUCTS

2.1 RECYCLED PLASTIC

Submit individual component and assembled unit structural integrity test results; creep tolerance; deflection tolerance; and vertical load test results and Life-cycle durability. Recycled plastic shall contain a minimum 85 percent of recycled post-consumer product. Recycled material shall be constructed or manufactured with a maximum 1/4 inch deflection or creep in any member, according to ASTM D648 and ASTM D1248. The components shall be molded of ultraviolet (UV) and color stabilized polyethylene. The material shall consist of a minimum 75 percent plastic profile of high-density polyethylene, low-density polyethylene, and polypropylene raw material. The material shall be non-toxic and have no discernible contaminates such as paper, foil, or wood. The material shall contain a maximum 3 percent air voids and shall be free of splinters, chips, peels, buckling, and cracks. Material shall be resistant to deformation from solar heat gain.

2.2 BINDERS

2.2.1 Synthetic Soil Binders

Calcium chloride, or other standard manufacturer's spray on adhesives designed for dust suppression. Submit certification for binders showing EPA registered uses, toxicity levels, and application hazards.

2.2.2 Geosynthetic Binders

Geosynthetic binders shall be manufactured in accordance with ASTM D1560, ASTM D2844/D2844M; and shall be referred to as products manufactured for use as modified emulsions for the purpose of erosion control and soil stabilization. Emulsions shall be manufactured from all natural materials and provide a hard durable finish.

2.3 MULCH

Mulch shall be free from weeds, mold, and other deleterious materials. Mulch materials shall be native to the region.

2.3.1 Straw

Straw shall be stalks from oats, wheat, rye, barley, or rice, furnished in air-dry condition and with a consistency for placing with commercial mulch-blowing equipment.

2.3.2 Hay

Hay shall be native hay, sudan-grass hay, broomsedge hay, or other herbaceous mowings, furnished in an air-dry condition suitable for placing with commercial mulch-blowing equipment.

2.3.3 Wood Cellulose Fiber

Submit certification stating that wood components were obtained from managed forests. Wood cellulose fiber shall be 100 percent recycled material and shall not contain any growth or germination-inhibiting factors and shall be dyed with non-toxic, biodegradable dye an appropriate color to facilitate placement during application. Composition on air-dry weight

basis: a minimum 9 to a maximum 15 percent moisture, and between a minimum 4.5 to a maximum 6.0 pH. Wood cellulose fiber shall not contain environmentally hazardous levels of heavy metals. Materials may be bulk tested or tested by toxicity characteristic leaching procedure (TCLP).

2.3.4 Paper Fiber

Paper fiber mulch shall be 100 percent post-consumer recycled news print that is shredded for the purpose of mulching seed.

2.3.5 Shredded Bark

Locally shredded material shall be treated to retard the growth of mold and fungi.

2.3.6 Wood By-Products

Submit composition, source, and particle size. Products shall be free from toxic chemicals or hazardous material. Wood locally chipped or ground bark shall be treated to retard the growth of mold and fungi. Gradation: A maximum 2 inch wide by 4 inch long.

2.3.7 Coir

Coir shall be manufactured from 100 percent coconut fiber cured in fresh water for a minimum of 6 months.

2.3.8 Asphalt Adhesive

Asphalt adhesive shall conform to the following: Emulsified asphalt, conforming to ASTM D977, Grade SS-1; and cutback asphalt, conforming to ASTM D2028/D2028M, Designation RC-70.

2.3.9 Mulch Control Netting and Filter Fabric

Mulch control netting and filter fabric may be constructed of lightweight recycled plastic, cotton, or paper or organic fiber. The recycled plastic shall be a woven or nonwoven polypropylene, nylon, or polyester containing stabilizers and/or inhibitors to make the fabric resistant to deterioration from UV, and with the following properties:

Minimum grab tensile strength (TF 25 #1/ASTM D4632/D4632M)	180 pounds
Minimum Puncture (TF 25 #4/ASTM D3787)	75 psi in the weakest direction
Apparent opening sieve size	minimum 40 and maximum 80 (U.S. Sieve Size)
Minimum Trapezoidal tear strength (TF 25 #2/ASTM D4533)	50 pounds

2.3.10 Hydraulic Mulch

Hydraulic mulch shall be made of 100 percent recycled material. Wood shall be naturally air-dried to a moisture content of 10.0 percent, plus or minus 3.0 percent. A minimum of 50 percent of the fibers shall be equal to or greater than 0.15 inch in length and a minimum of 75 percent of the fibers shall be retained on a 28 mesh screen. Hydraulic mulch shall have the following mixture characteristics:

CHARACTERISTIC (typical)	VALUE
pH	5.4 ± 0.1
Organic Matter (oven dried basis)	percent 99.3 within ± 0.2
Inorganic Ash (oven dried basis)	percent 0.7 within ± 0.2
Water Holding Capacity	percent 1,401

2.3.11 Dye

Dye shall be a water-activated, green color. Pre-package dye in water dissolvable packets in the hydraulic mulch.

2.4 GEOTEXTILE FABRICS

Geotextile fabrics shall be woven of polypropylene filaments formed into a stable network so that the filaments retain their relative position to each other. Content shall be a minimum of 75 percent recycled materials. Sewn seams shall have strength equal to or greater than the geotextile itself. Install fabric to withstand maximum velocity flows as recommended by the manufacturer. The geotextile shall conform to the following minimum average roll values:

Property	Performance	Test Method
Weight	264 g/m^2	ASTM D3776/D3776M
Thickness	0.635 mm	ASTM D1777
Permeability	0.12 cm/sec	ASTM D4491
Abrasion Resistance, Type (percent strength retained)	58 percent X 81 percent	ASTM D3884
Tensile Grab Strength	1467 N X 1933 N	ASTM D4632/D4632M
Grab Elongation	15 percent X 20 percent	ASTM D4632/D4632M
Burst Strength	5510 kN/m^2	ASTM D3787
Puncture Strength	733 N	ASTM D4833/D4833M
Trapezoid Tear	533 N X 533 N	ASTM D4533
Apparent Opening Size	40 US Std Sieve	ASTM D4751
UV Resistance @ 500 hours	90 percent	ASTM D4355

2.5 EROSION CONTROL BLANKETS

2.5.1 Erosion Control Blankets Type I

Use Type I blankets for erosion control and vegetation establishment on roadside embankments, abutments, berms, shoulders, and median swales where natural vegetation will provide long term stabilization. Erosion control blankets shall be a machine-produced mat of 100 percent straw. The blanket shall be of consistent thickness with the straw evenly distributed over the entire area of the mat. Cover the blanket on the top side with a photodegradable polypropylene netting having an approximate 1/2 by 1/2 inch mesh and be sewn together on a maximum 1.5 inch centers with degradable thread. The erosion control blanket shall have the following properties:

Material Content	
Straw	100 percent with approximately 0.50 lb/yd^2 weight
Netting	One side only, lightweight photodegradable with approximately 1.64 lb/1,000 ft^2 weight
Thread	Degradable
Note 1: Photodegradable life a minimum of 2 months with a minimum 90 percent light penetration. Apply to slopes up to a maximum 3:1 gradient.	

2.5.2 Erosion Control Blankets Type II

Erosion control blankets shall be a machine-produced mat of 100 percent straw. The blanket shall be of consistent thickness with the straw evenly distributed over the entire area of the mat. Cover the blanket on the top side with a polypropylene netting having an approximate 1/2 by 1/2 inch mesh with photodegradable accelerators to provide breakdown of the netting within approximately 45 days, depending upon geographic location and elevation. Sew the blanket together on a maximum 1.5 inch centers with degradable thread. The erosion control blanket shall have the following properties:

Material Content	
Straw	100 percent with approximately 0.50 lb/yd^2 weight
Netting	One side only, lightweight photodegradable with photo accelerators and approximately 1.64 lb/1,000 ft^2 weight
Thread	Degradable
Note 1: Photodegradable life a minimum of 10 months with a minimum 90 percent light penetration. Apply to slopes up to a maximum 3:1 gradient.	

2.5.3 Erosion Control Blankets Type III

Type III blankets shall be used for erosion control and vegetation establishment on roadside embankments, abutments, berms, shoulders, and median swales where natural vegetation will provide long term

stabilization. Erosion control blanket shall be a machine-produced mat consisting of 70 percent straw and 30 percent coconut fiber. The blanket shall be of consistent thickness with the straw and coconut fiber evenly distributed over the entire area of the mat. Cover the blanket on the top side with heavyweight photodegradable polypropylene netting having UV additives to delay breakdown and an approximate 5/8 by 5/8 inch mesh, and on the bottom side with a lightweight photodegradable polypropylene netting with an approximate 1/2 by 1/2 inch mesh. Sew the blanket together on 1.5 inch centers with degradable thread. The erosion control blanket shall have the following properties:

Material Content	
Straw	70 percent by approximately 0.35 lb/yd^2
Coconut Fiber	30 percent by approximately 0.15 lb/yd^2 weight
Netting	Top side heavyweight photodegradable with UV additives and approximately 3 $lb/1,000\ ft^2$ weight
	Bottom side lightweight photodegradable with approximately 1.64 $lb/1,000\ ft^2$ weight
NOTE: Photodegradable life a minimum of 10 months with a minimum 90 percent light penetration. Apply to slopes with a gradient less than 1.5:1.	

2.5.4 Erosion Control Blankets Type IV

Erosion control blanket shall be a machine-produced mat of 100 percent straw. The blanket shall be of consistent thickness with the straw evenly distributed over the entire area of the mat. Cover the blanket on the top and bottom sides with lightweight photodegradable polypropylene netting having an approximate 1/2 by 1/2 inch mesh. Sew the blanket together on 1.5 inch centers with degradable thread. The erosion control blanket shall have the following properties:

Material Content	
Straw	100 percent with approximately 0.50 lb/yd^2 weight
Netting	Both sides lightweight photodegradable with approximately 1.64 $lb/1,000\ ft^2$ weight.
Thread	Degradable
Note: Photodegradable life a minimum of 2 months with a minimum 90 percent light penetration. Apply to slopes with a gradient of less than 1.5:1.	

2.5.5 Erosion Control Blankets Type V

Erosion control blanket shall be a machine-produced mat of 100 percent straw. The blanket shall be of consistent thickness with the straw evenly distributed over the entire area of the mat. Cover the blanket on the top

side with polypropylene netting having an approximate 1/2 by 1/2 inch mesh with photodegradable accelerators to provide breakdown of the netting within approximately 45 days, depending upon geographic location and elevation. Cover the bottom with a polypropylene netting having an approximate 1/2 by 1/2 inch mesh with photo accelerators. Sew the blanket together on 1.5 inch centers with degradable thread. The erosion control blanket shall have the following properties:

Material Content	
Straw	70 percent by approximately 0.35 lb/yd^2
Netting	Top side lightweight photodegradable with photo accelerators with approximately 1.64 lb/1,000 ft^2 weight
	Bottom side lightweight photodegradable with photo accelerators and approximately 1.64 lb/1,000 ft^2 weight
NOTE: Photodegradable life a minimum of 10 months with a minimum 90 percent light penetration. Apply to slopes up to a maximum 2:1 gradient.	

2.5.6 Erosion Control Blankets Type VI

Erosion control blanket shall be a machine-produced 100 percent biodegradable mat with a 100 percent straw fiber matrix. The blanket shall be of consistent thickness with the straw fiber evenly distributed over the entire area of the mat. Cover the blanket on the top side with a 100 percent biodegradable woven natural organic fiber netting. The netting shall consist of machine directional strands formed from two intertwined yarns with cross directional strands interwoven through the twisted machine strands (commonly referred to as a Leno weave) to form an approximate 1/2 by 1/2 inch mesh. Sew the blanket together with biodegradable thread on 1.5 inch centers. The erosion control blanket shall have the following properties:

Material Content	
Matrix	100 percent straw fiber with approximately 0.50 lb/yd^2 weight
Netting	One side only, Leno woven 100 percent biodegradable natural organic fiber
Weight	approximately 9.3 lb/1,000 ft
Thread	Biodegradable
NOTE: Photodegradable life a minimum of 10 months with a minimum 90 Percent light penetration. Apply to slopes up to a maximum 2:1 gradient.	

2.5.7 Erosion Control Blankets Type VII

Erosion control blanket shall be a machine-produced 100 percent biodegradable mat with an herbaceous straw fiber matrix. The blanket shall be of consistent thickness with the straw evenly distributed over the

entire area of the mat. Cover the blanket on the top and bottom sides with 100 percent biodegradable woven natural fiber netting. The netting shall consist of machine directional strands formed from two intertwined yarns with cross directional strands interwoven through the twisted machine strands (commonly referred to as a Leno weave) to form an approximate 1/2 by 1/2 inch mesh. Sew the blanket together with biodegradable thread on 1.5 inch centers. The blanket shall have the following properties:

Material Content	
Straw	100 percent straw fiber with approximately 0.50 lb/yd^2 weight
Netting	Top and bottom sides,Leno woven 100 percent biodegradable natural organic fiber with approximately 9.3 $lb/1,000ft^2$ weight
Thread	Biodegradable
Note: Photodegradable life a minimum of 18 months with a minimum 90 percent light penetration. Apply to slopes up to a maximum 1.5:1 gradient.	

2.5.8 Erosion Control Blankets Type VIII

Erosion control blanket shall be a machine-produced 100 percent biodegradable mat with a 70 percent herbaceous straw and 30 percent coconut fiber blend matrix. The blanket shall be of consistent thickness with the straw and coconut fiber evenly distributed over the entire area of the mat. Cover the blanket on the top and bottom sides with 100 percent biodegradable woven natural organic fiber netting. The netting shall consist of machine directional strands formed from two intertwined yarns with cross directional strands interwoven through the twisted machine strands (commonly referred to as a Leno weave) to form an approximate 1/2 by 1/2 inch mesh. Sew the blanket together with biodegradable thread on 1.5 inch centers. Straw/Coconut fiber erosion control blanket shall have the following properties:

Material Content	
Matrix	70 percent straw fiber with approximately 0.35 lb/yd^2 weight. 30 percent coconut fiber cured in fresh water with approximately 0.15 lb/yd^2 weight
Netting	Both sides woven 100 percent biodegradable natural organic fiber with approximately 9.3 $lbs/1,000\ ft^2$ weight
Thread	Biodegradable
Note: Photodegradable life a minimum of 24 months with a minimum 90 percent light penetration. Apply to slopes up to a maximum 1.5:1 gradient.	

2.5.9 Erosion Control Blankets Type IX (Turf Reinforcement Mat)

Permanent erosion control/turf reinforcement mat is constructed of 100 percent coconut fiber stitch bonded between a heavy duty UV stabilized bottom net, and a heavy duty UV stabilized cuspated (crimped) middle netting overlaid with a heavy duty UV stabilized top net. The cuspated netting forms prominent closely spaced ridges across the entire width of the mat. The three nettings are stitched together on 1.5 inch centers with UV stabilized polypropylene thread to form a permanent three dimensional structure. The following list contains further physical properties of the turf erosion control mat.

Property	Test Method	Value
Ground Cover	Image Analysis	93 percent
Thickness	ASTM D1777	0.63 in
Mass per Unit Area	ASTM D3776/D3776M	0.92 lb/sy
Tensile Strength	ASTM D5035	480 lb/ft
Elongation	ASTM D5035	22 percent
Tensile Strength	ASTM D5035	960 lb/ft
Elongation	ASTM D5035	31 percent
Tensile Strength	ASTM D5035	177 lbs
Elongation	ASTM D5035	22 percent
Resiliency	ASTM D1777	greater than 80 percent
UV Stability*	ASTM D4355	151 lbs 86 percent
Color(permanent net)		UV Black
Porosity(permanent net)Calculated		greater than 95 percent
Minimum Filament Measured		0.03 in
Diameter (permanent net)		0.03 in
NOTE 1: *ASTM D5035 Tensile Strength and percent Strength Retention of material after 1000 hours of exposure in Xenon-Arc Weatherometer		
NOTE 2: Photodegradable life a minimum of 36 months with a minimum 90 percent light penetration. Apply to slopes up to a maximum 1:1 gradient		

2.5.10 Erosion Control Blankets Type X (Turf Reinforcement Mat)

Permanent erosion control/turf reinforcement mat shall be constructed of 100 percent UV stabilized high denier polypropylene fiber sewn between a black UV stabilized 1/2 inch mesh polypropylene netting on the top 5 lbs/1000 square ft and a black UV stabilized 5/8 inch mesh polypropylene netting on the bottom 3 lbs/1000 square ft with polypropylene thread. The

mat shall be resistant to photo and chemical degradation. The following list contains further physical properties of the turf reinforcement mat.

Property	Test Method	Value
Thickness	ASTM D1777	0.56 in
Mass per Unit Area	ASTM D3776/D3776M	11.2 oz/sq yd
Tensile Strength	ASTM D4632/D4632M	35.2 lbs
Elongation	ASTM D4632/D4632M	25.5 percent
Tensile Strength	ASTM D4595	259.2 lbs/ft
Elongation	ASTM D4595	20.9 percent
Tensile Strength	ASTM D5035	300 lbs/ft
Elongation	ASTM D5035	51 percent
Tensile Strength	ASTM D5035	89 lbs
Elongation	ASTM D5035	21 percent
Resiliency	100 PSI-3 cycles	94 percent
UV Stability*	ASTM D4355	81* lbs 90* percent
NOTE 1: *ASTM D5035 Tensile Strength and percent Strength Retention of material after 1000 hours of exposure in Xenon-Arc Weatherometer		
NOTE 2: Photodegradable life a minimum of 36 months with a minimum 90 percent light penetration. Apply to slopes up to a maximum 1:1 gradient		

2.5.11 Erosion Control Blankets Type XI (Re-vegetation Mat)

Seed-incorporated blanket option shall consist of 2-ply 100 percent recycled, unbleached, cellulose tissue. Uniformly distribute a seed mix upon the bottom ply of cellulose tissue and fully overlaid with a top cellulose ply to provide complete envelopment of the seed layer. Sew the seed-incorporated cellulose medium to the bottom side of the specified erosion control blanket.

Material Content	
Top Ply	1-ply 100 percent recycled unbleached cellulose tissue with approximately 4.3 lbs/1,000 ft^2 weight
Seed	0.033 lbs/yd^2 (160 lbs/acre)
	0.017 lbs/yd^2 (80 lbs/acre)
Bottom Ply	1-ply recycled unbleached cellulose issue with approximately 4.3 lbs/(1,000 ft^2) weight

Material Content
NOTE: Photodegradable life a minimum of 36 months with a minimum 90 percent light penetration. Apply to slopes up to a minimum 1:1 gradient.

2.5.12 Erosion Control Blankets Type XII (Compost Mat)

Compost blanket shall consist of a layer of 100 percent biobased stable and mature compost uniformly distributed to a depth of 3/4 to 3 inches along slopes with erosion potential. Compost shall encourage plant growth and seed shall be applied following compost application. The blanket shall have the following properties:

Parameter	Range
Particle size	3/8-1/2 inch sieve and 2-3 inch sieve (ratio = 3:1)
Moisture content	20 - 50 percent
Soluble salt	3.0 - 6.0 mmhos/cm
Organic matter	40 - 70 percent
pH	6.0 - 8.0
Nitrogen content	0.5 - 2.0 percent
Human made inerts	0.0 - 1.0 percent

2.5.13 Seed

Submit classification, botanical name, common name, percent pure live seed, minimum percent germination and hard seed, maximum percent weed seed content, and date tested.

2.5.13.1 Seed Classification

State-approved native seed mix of the latest season's crop shall be provided in original sealed packages bearing the producer's guaranteed analysis for percentages of mixture, purity, germination, hard seed, weed seed content, and inert material. Conform labels to the AMS Seed Act and applicable state seed laws. Submit the calendar time for Seed Establishment Period. When there is more than one seed establishment period, the boundaries of the seeded area covered for each period shall be described.

2.5.13.2 Quality

Weed seed shall be a maximum 1 percent by weight of the total mixture.

2.5.14 Staking

Stakes shall be 100 percent biodegradable manufactured from recycled plastic or wood and shall be designed to safely and effectively secure

erosion control blankets for temporary or permanent applications. The biodegradable stake shall be fully degradable by biological activity within a reasonable time frame. The bio-plastic resin used in production of the biodegradable stake shall consist of polylactide, a natural, completely biodegradable substance derived from renewable agricultural resources. The biodegradable stake must exhibit ample rigidity to enable being driven into hard ground, with sufficient flexibility to resist shattering. Serrate the biodegradable stake on the leg to increase resistance to pull-out from the soil.

2.5.15 Staples

Staples shall be as recommended by the manufacturer.

2.6 SYNTHETIC GRID AND SHEET SYSTEMS

Synthetic grid and sheet systems shall be formed of recycled plastic in accordance with paragraph RECYCLED PLASTICS and have interlocking components to form a uniform underlayment or strata to receive fill.

2.6.1 Synthetic Grid Systems

Grids shall be made of modular interlocking components. Form blocks as rigid interlocking components or as expandable sheets and manufacture to allow articulation upward and downward while restricting lateral movement. The assembled grid system shall articulate over three-directional vertical curves, both upward and downward. Nominal grid thickness shall be as indicated.Provide 100 percent coverage of the area with the cells back filled.

2.6.2 Synthetic Sheet System

Synthetic sheet thickness shall be as indicated.

2.7 SEDIMENT FENCING

Wood or burlap.

2.8 COMPOST FILTER BERMS

Compost berms shall consist of 100 percent biobased windrow-shaped compost piles arranged across slopes. Berms shall have the following properties:

Parameter	Range
Particle size	3/8-1/2 inch sieve and 2-3 inch sieve (ratio = 1:1)
Moisture content	20 - 50 percent
Soluble salt	4.0 - 6.0 mmhos/cm
Organic matter	40 - 70 percent
pH	6.0 - 8.0

Parameter	Range
Nitrogen content	0.5 - 2.0 percent
Human made inerts	0.0 - 1.0 percent
Size	1 - 2 feet H x 2.5 - 4 feet W

2.9 AGGREGATE

Submit LEED documentation relative to recycled content credit in accordance with LEED GBDC. Include in LEED Documentation Notebook. Crushed rock shall be crushed run between a minimum inches and a maximum 2 inches. Gravel shall be river run between a minimum 1/2 inches and a maximum 2 inches. Submit sieve test results for both gravel and sand. Sand shall be uniformly graded.

2.10 ARTICULATING CELLULAR CONCRETE BLOCK SYSTEMS

Blocks shall be made of portland cement concrete, with no reinforcement, and shall be cast using block manufacturing equipment with vibratory compaction processes (dry cast). Blocks shall be made of modular interlocking components. Cast blocks in pairs of "lock" and "key" blocks with each "lock" block having recesses and with each "key" block interlocking knobs. Manufacture blocks to allow articulation upward and downward while restricting lateral movement. The assembled block system shall articulate over three-directional vertical curves, both upward and downward.

a. Nominal block thickness as indicated.

c. Perform compressive strength testing of blocks, in accordance with ASTM C39/C39M, on cylinders cut from random block samples in general conformance with ASTM C42/C42M.

d. The average absorption of block samples not greater than 7 percent, with no individual sample greater than 8 percent, in accordance with ASTM C140/C140M.

2.11 WATER

Unless otherwise directed, water is the responsibility of the Contractor. Water shall be collected rainwater, greywater, potable or supplied by an existing irrigation system.

PART 3 EXECUTION

3.1 WEATHER CONDITIONS

Perform erosion control operations under favorable weather conditions; when excessive moisture, frozen ground or other unsatisfactory conditions prevail, the work shall be stopped as directed. When special conditions warrant a variance to earthwork operations, submit a revised construction schedule for approval. Do not apply erosion control materials in adverse

weather conditions which could affect their performance.

3.1.1 Finished Grade

Provide condition of finish grade status prior to installation, location of underground utilities and facilities. Verify that finished grades are as indicated on the drawings; complete finish grading and compaction in accordance with Section 31 00 00 EARTHWORK, prior to the commencement of the work. Verify and mark the location of underground utilities and facilities in the area of the work. Repair damage to underground utilities and facilities at the Contractor's expense.

3.1.2 Placement of Erosion Control Blankets

Before placing the erosion control blankets, ensure the subgrade has been graded smooth; has no depressed, void areas; is free from obstructions, such as tree roots, projecting stones or other foreign matter. Verify that mesh does not include invasive species. Vehicles will not be permitted directly on the blankets.

3.1.3 Synthetic Grid

Before placing the grid system, ensure that the subgrade has been properly grubbed of large roots and rocks; compacted; has been graded smooth; has no depressed, void, soft or uncompacted areas; is free from obstructions, such as tree roots, projecting stones or other foreign matter; and has been seeded.

3.1.4 Concrete Cellular Block

Before placing geotextile fabric under cellular block, ensure that the subgrade has been properly compacted; has been graded smooth; has no depressed, void, soft or uncompacted areas; is free from obstructions, such as tree roots, projecting stones or other foreign matter; and has been seeded. Compact subgrade compaction to at least 90 percent of the maximum dry density at optimum moisture content, as determined by ASTM D698, with a tolerance of plus or minus 1 inch of the design elevation.

3.2 SITE PREPARATION

3.2.1 Soil Test

Test soil in accordance with ASTM D5268 and ASTM D4972 for determining the particle size and mechanical analysis. Sample collection onsite shall be random over the entire site. The test shall determine the soil particle size as compatible for the specified material.

3.2.2 Layout

Submit scale drawings defining areas to receive recommended materials as required by federal, state or local regulations. Erosion control material locations may be adjusted to meet field conditions. When soil tests result in unacceptable particle sizes, submit a shop drawing indicating the corrective measures.

3.2.3 Protecting Existing Vegetation

When there are established lawns in the work area, the turf shall be covered and/or protected or replaced after construction operations.

Identify existing trees, shrubs, plant beds, and landscape features that are to be preserved on site by appropriate tags and barricade with reusable, high-visibility fencing along the dripline. Mitigate damage to existing trees at no additional cost to the Government. Damage shall be assessed by a state certified arborist or other approved professional using the National Arborist Association's tree valuation guideline.

3.2.4 Obstructions Below Ground

When obstructions below ground affect the work, submit shop drawings showing proposed adjustments to placement of erosion control material for approval.

3.3 INSTALLATION

Immediately stabilize exposed soil using fabric, mulch, compost, and seed. Stabilize areas for construction access immediately as specified in the paragraph Construction Entrance. Install principal sediment basins and traps before any major site grading takes place. Provide additional sediment traps and sediment fences as grading progresses. Provide inlet and outlet protection at the ends of new drainage systems. Remove temporary erosion control measures at the end of construction and provide permanent seeding.

3.3.1 Construction Entrance

Provide as indicated on drawings, a minimum of 6 inches thick, at points of vehicular ingress and egress on the construction site. Construction entrances shall be cleared and grubbed, and then excavated a minimum of 3 inches prior to placement of the filter fabric and aggregate. The aggregate shall be placed in a manner that will prevent damage and movement of the fabric. Place fabric in one piece, where possible. Overlap fabric joints a minimum of 12 inches.

3.3.2 Compost Filter Berms

Place compost filter berm uncompacted on bare soil as indicated on drawings, parallel to base of slope, and according to manufacturer recommendations. When no longer required, berm material may be left to decompose naturally, or distributed over area for use as a soil amendment or ground cover.

3.3.3 Synthetic Binders

Apply synthetic binders heaviest at edges of areas and at crests of ridges and banks to prevent displacement. Apply binders to the remainder of the area evenly as recommended by the manufacturer.

3.3.4 Seeding

When seeding is required prior to installing mulch on synthetic grid systems verify that seeding will be completed in accordance with Sections 31 00 00 EARTHWORK.

3.3.5 Mulch Installation

Install mulch in the areas indicated. Apply mulch evenly.

3.3.6 Mulch Control Netting

Netting may be stapled over mulch according to manufacturer's recommendations.

3.3.7 Mechanical Anchor

Mechanical anchor shall be a V-type-wheel land packer; a scalloped-disk land packer designed to force mulch into the soil surface; or other suitable equipment.

3.3.8 Asphalt Adhesive Tackifier

Asphalt adhesive tackifier shall be sprayed at a rate between 10 to 13 gallons/1000 square feet. Do no completely exclude sunlight from penetrating to the ground surface.

3.3.9 Non-Asphaltic Tackifier

Apply hydrophilic colloid at the rate recommended by the manufacturer, using hydraulic equipment suitable for thoroughly mixing with water. Apply a uniform mixture over the area.

3.3.10 Asphalt Adhesive Coated Mulch

Hay or straw mulch may be spread simultaneously with asphalt adhesive applied at a rate between 10 to 13 gallons/1000 square feet, using power mulch equipment equipped with suitable asphalt pump and nozzle. Apply the adhesive-coated mulch evenly over the surface. Do not completely exclude sunlight from penetrating to the ground surface.

3.3.11 Wood Cellulose Fiber, Paper Fiber, and Recycled Paper

Apply wood cellulose fiber, paper fiber, or recycled paper as part of the hydraulic mulch operation.

3.3.12 Hydraulic Mulch Application

3.3.12.1 Unseeded Area

Install hydraulic mulch as indicated and in accordance with manufacturer's recommendations. Mix hydraulic mulch with water at the rate recommended by the manufacturer for the area to be covered. Mixing shall be done in equipment manufactured specifically for hydraulic mulching work, including an agitator in the mixing tank to keep the mulch evenly disbursed.

3.3.12.2 Seeded Area

For drill or broadcast seeded areas, apply hydraulic mulch evenly. For hydraulic seeded areas, apply mulch with the seed and fertilizer.

3.3.13 Erosion Control Blankets

a. Install erosion control blankets as indicated and in accordance with manufacturer's recommendations. The extent of erosion control blankets shall be as indicated.

b. Orient erosion control blankets in vertical strips and anchored with staples, as indicated. Abut adjacent strips to allow for installation

of a common row of staples. Overlap horizontal joints between erosion control blankets sufficiently to accommodate a common row of staples with the uphill end on top.

c. Where exposed to overland sheet flow, locate a trench at the uphill termination. Staple the erosion control blanket to the bottom of the trench. Backfill and compact the trench as required.

d. Where terminating in a channel containing an installed blanket, the erosion control blanket shall overlap installed blanket sufficiently to accommodate a common row of staples.

3.3.14 Synthetic Sheet System

Anchor synthetic sheet systems in accordance with the manufacturer's recommendation. Place systems on a well graded surface and then backfill, a maximum seven days after placement, to protect the material from ultraviolet radiation. Include contiguous perimeter termination trenches as the installation progresses.

3.3.14.1 Sheet System Revegetation

For areas not requiring re-vegetation, backfill openings to grade with well graded fill material and surface prepared for finish as indicated on the drawings. For areas requiring re-vegetation, backfill openings using well graded fill and topsoil as indicated on the drawings.

3.3.14.2 Sheet System Grids

Each pair of grids shall cover grade without gaps or open spaces between them. Provide 100 percent coverage of the area with the cells backfilled.

3.3.14.3 Sheet System Seeding

Install seed in accordance with Section 32 92 19 SEEDING.

3.3.14.4 Grid System Grids

Anchor synthetic grid systems in accordance with the manufacturer's recommendation. Place interlocking grid systems on well graded surface. Complete the backfilling of openings a maximum 7 days after placement to protect the material from ultraviolet radiation. As the installation progresses, backfilling shall include contiguous perimeter termination trenches.

3.3.15 Grids

3.3.15.1 Grid System Revegetation

For areas not requiring re-vegetation, backfill openings with a minimum 1/2 inch nominal size crushed rock, to a minimum 2 inch depth.

3.3.15.2 Synthetic Grids

Each pair of grids shall cover grade without gaps or open spaces between them. The system shall provide 100 percent coverage of the area with the cells backfilled.

3.3.15.3 Grid System Seeding

Install seed in accordance with Section 32 92 19 SEEDING.

3.3.16 Articulating Cellular Concrete Block System Installation

Underlay block installation with geotextile fabric in accordance with the manufacturer's recommendation. Begin block installation from a straight-line oriented perpendicular to the direction of lay, and proceed toward an open area and not toward a point of fixity. Install blocks with the bottom side down. Continue to lay blocks in straight-lines to maintain the interlock characteristic. To maintain straight-lines, no more than two rows of blocks shall be started at a time. The extent of blocks shall include the perimeter termination trenches and shall be as shown on the drawings. For installation purposes, the bottom of the block is the side with a flat unformed surface.

3.3.16.1 Concrete Grout

When abutting structures, such as culverts, piers and bridge abutments, furnish and install concrete grout full-depth in the void between the blocks and penetrations.

3.3.16.2 Toe Protection

Where exposed to hydraulic forces, the perimeter of the block system shall be turned into and buried beneath the adjacent ground level to a minimum 12 inch depth or as directed. Where not exposed to hydraulic forces, place the perimeter of the geotextile in a minimum 12 inch deep trench with the blocks flush with the adjacent surface. Excavate trenches as required for perimeter termination.

3.3.16.3 Backfilling Cellular Block System

Complete backfilling of openings between blocks a maximum of 7 days after placement of the filter, to protect the geotextile from ultraviolet radiation. As the installation progresses, backfilling shall include contiguous perimeter termination trenches.

3.3.16.4 Block System Revegetation

For areas not requiring revegetation, backfill openings with a minimum 1/4 inch nominal size crushed rock to a minimum 2 inch depth or as otherwise specified, regardless of block thickness. For areas requiring revegetation as indicated, backfill openings with topsoil as specified.

3.3.17 Sediment Fencing

Install posts at the spacing indicated on drawings and at an angle between 2 degrees and 20 degrees towards the potential silt load area. Sediment fence height shall be approximately 16 inches. Do not attach filter fabric to existing trees. Secure filter fabric to the post and wire fabric using staples, tie wire, or hog rings. Imbed the filter fabric into the ground as indicated on drawings. Splice filter fabric at support pole using a 6 inches overlap and securely seal.

3.4 CLEAN-UP

Dispose of excess material, debris, and waste materials offsite at an

approved landfill or recycling center. Clear adjacent paved areas. Immediately upon completion of the installation in an area, protect the area against traffic or other use by erecting barricades and providing signage as required, or as directed.

3.5 WATERING SEED

Start watering immediately after installing erosion control blanket type XI (revegetation mat). Apply water to supplement rainfall at a sufficient rate to ensure moist soil conditions to a minimum 1 inch depth. Prevent run-off and puddling. Do no drive watering trucks over turf areas, unless otherwise directed. Prevent watering of other adjacent areas or plant material.

3.6 MAINTENANCE RECORD

Furnish a record describing the maintenance work performed, record of measurements and findings for product failure, recommendations for repair, and products replaced.

3.6.1 Maintenance

Maintenance shall include eradicating weeds; protecting embankments and ditches from surface erosion; maintaining the performance of the erosion control materials and mulch; protecting installed areas from traffic.

3.6.2 Maintenance Instructions

Furnish written instructions containing drawings and other necessary information, describing the care of the installed material; including, when and where maintenance should occur, and the procedures for material replacement. Submit instruction for year-round care of installed material. Include manufacturer supplied spare parts.

3.6.3 Patching and Replacement

Unless otherwise directed, material shall be placed, seamed or patched as recommended by the manufacturer. Remove material not meeting the required performance as a result of placement, seaming or patching from the site. Replace the unacceptable material at no additional cost to the Government.

3.7 SATISFACTORY STAND OF GRASS PLANTS

When erosion control blanket type XI (revegetation mat) is installed, evaluate the grass plants for species and health when the grass plants are a minimum 1 inch high. A satisfactory stand of grass plants from the revegetation mat area shall be a minimum 10 grass plants per square foot. The total bare spots shall not exceed 2 percent of the total revegetation mat area.

-- End of Section --

SECTION 32 15 00

AGGREGATE SURFACE COURSE
04/08

PART 1 GENERAL

1.1 REFERENCES

The publications listed below form a part of this specification to the extent referenced. The publications are referred to within the text by the basic designation only.

ASTM INTERNATIONAL (ASTM)

ASTM C117	(2013) Standard Test Method for Materials Finer than 75-um (No. 200) Sieve in Mineral Aggregates by Washing
ASTM C131	(2006) Standard Test Method for Resistance to Degradation of Small-Size Coarse Aggregate by Abrasion and Impact in the Los Angeles Machine
ASTM C136	(2006) Standard Test Method for Sieve Analysis of Fine and Coarse Aggregates
ASTM D3740	(2012a) Minimum Requirements for Agencies Engaged in the Testing and/or Inspection of Soil and Rock as Used in Engineering Design and Construction
ASTM D422	(1963; R 2007; E 2014) Particle-Size Analysis of Soils
ASTM D75/D75M	(2013) Standard Practice for Sampling Aggregates
ASTM E11	(2013) Wire Cloth and Sieves for Testing Purposes

1.2 UNIT PRICES

1.2.1 Measurement

The quantity of aggregate surface course completed and accepted as determined by the Contracting Officer shall be measured in cubic yards. The volume of aggregate surface course in place and accepted by the Contracting Officer shall be determined by the average job thickness obtained in accordance with paragraph THICKNESS CONTROL and the dimensions shown on approved drawings .

1.2.2 Payment

Quantities of aggregate surface course for roads, as measured above, will be paid for at the respective contract unit prices. Payment will

constitute full compensation for the construction and completion of the aggregate surface course, including furnishing all labor and incidentals necessary to complete the work required by this section.

1.3 SUBMITTALS

Government approval is required for submittals with a "G" designation; submittals not having a "G" designation are for information only. When used, a designation following the "G" designation identifies the office that will review the submittal for the Government. Submit the following in accordance with Section 01 33 00 SUBMITTAL PROCEDURES:

SD-03 Product Data

Material
Equipment

SD-06 Test Reports

Sampling and Testing
Proof Roll Tests

1.4 QUALITY ASSURANCE

Sampling and testing is the responsibility of the Contractor. Submit calibration curves and related test results prior to using the device or equipment being calibrated. Submit copies of field test results within 24 hours after the tests are performed. Test results from samples, not less than 30 days before material is required for the work. Results of laboratory tests for quality control purposes, for approval, prior to using the material. Sampling and testing shall be performed by an approved commercial testing laboratory or by the Contractor, subject to approval. If the Contractor elects to establish its own testing facilities, approval of such facilities will be based on compliance with ASTM D3740. No work requiring testing will be permitted until the Contractor's facilities have been inspected and approved.

1.4.1 Sampling

Take samples for material gradation tests in conformance with ASTM D75/D75M. When deemed necessary, the sampling will be observed by the Contracting Officer.

1.4.2 Testing

1.4.2.1 Gradation

Make aggregate gradation in conformance with ASTM C117, ASTM C136, and ASTM D422. Sieves shall conform to ASTM E11.

1.4.3 Approval of Materials

Select the source of the material to be used for producing aggregates 14 days prior to the time the material will be required in the work. Approval of sources not already approved by the Corps of Engineers will be based on an inspection by the Contracting Officer. Tentative approval of materials will be based on appropriate test results on the aggregate source. Final approval of the materials will be based on tests for gradation performed on samples taken from the completed and compacted surface course.

1.4.4 Equipment

Submit a list of proposed equipment to be used in performance of construction work including descriptive data. All plant, equipment, and tools used in the performance of the work covered by this section will be subject to approval by the Contracting Officer before the work is started and shall be maintained in satisfactory working condition at all times. The equipment shall be adequate and shall have the capability of producing the required compaction, and meeting the grade controls, thickness controls, and smoothness requirements set forth herein.

1.5 ENVIRONMENTAL REQUIREMENTS

Aggregate surface courses shall not be constructed when the ambient temperatures is below 35 degrees F and on subgrades that are frozen or contain frost. It is the responsibility of the Contractor to protect, by approved method or methods, all areas of surfacing that have not been accepted by the Contracting Officer. Surfaces damaged by freeze, rainfall, or other weather conditions shall be brought to a satisfactory condition by the Contractor.

PART 2 PRODUCTS

2.1 AGGREGATES

Provide aggregates consisting of clean, sound, durable particles of natural gravel, crushed gravel, crushed stone, sand, slag, soil, or other approved materials processed and blended or naturally combined. Provide aggregates free from lumps and balls of clay, organic matter, objectionable coatings, and other foreign materials. The Contractor is responsible for obtaining materials that meet the specification and can be used to meet the grade and smoothness requirements specified herein after all compaction and proof rolling operations have been completed.

2.1.1 Coarse Aggregates

The material retained on the No. 4 sieve shall be known as coarse aggregate. Coarse aggregates shall be reasonably uniform in density and quality. The coarse aggregate shall have a percentage of wear not to exceed 50 percent after 500 revolutions as determined by ASTM C131. The amount of flat and/or elongated particles shall not exceed 20 percent. A flat particle is one having a ratio of width to thickness greater than three; an elongated particle is one having a ratio of length to width greater than three. When the coarse aggregate is supplied from more than one source, aggregate from each source shall meet the requirements set forth herein.

2.1.2 Fine Aggregates

The material passing the No. 4 sieve shall be known as fine aggregate. Fine aggregate shall consist of screenings, sand, soil, or other finely divided mineral matter that is processed or naturally combined with the coarse aggregate.

2.1.3 Gradation Requirements

Gradation requirements specified in TABLE I shall apply to the completed aggregate surface. It is the responsibility of the Contractor to obtain

materials that will meet the gradation requirements after mixing, placing, compacting, and other operations. TABLE I shows permissible gradings for granular material used in aggregate surface roads. Sieves shall conform to ASTM E11.

TABLE I. GRADATION FOR AGGREGATE SURFACE COURSES
Percentage by Weight Passing Square-Mesh Sieve

Sieve Designation	No. 1	No. 2
1 1/4 in.	100	-
1 in.	80-100	-
3/4 in.	-	100
5/8 in.	50-80	-
1-2 in.	-	80-100
No. 4	25-45	46-66
No. 40	3-18	8-24
No. 200	8 max	10 max

2.2 LIQUID LIMIT AND PLASTICITY INDEX REQUIREMENTS

The portion of the completed aggregate surface course passing the No. 40 sieve shall have a maximum liquid limit of 35 and a plasticity index of 4 to 9.

PART 3 EXECUTION

3.1 OPERATION OF AGGREGATE SOURCES

Perform clearing, stripping, and excavating. Operate the aggregate sources to produce the quantity and quality of materials meeting these specification requirements in the specified time limit. Upon completion of the work, the aggregate sources on Government property shall be finalized to drain readily and be left in a satisfactory condition. Finalize aggregate sources on private lands in agreement with local laws or authorities.

3.2 STOCKPILING MATERIALS

Prior to stockpiling the material, clear and level the storage sites. All materials, including approved material available from excavation and grading, shall be stockpiled in the manner and at the locations designated. Stockpile aggregates in such a manner that will prevent segregation. Aggregates and binders obtained from different sources shall be stockpiled separately.

3.3 COMPACTION

Compact each layer of the aggregate surface course with approved compaction equipment, as required in the following paragraphs. The water content during the compaction procedure shall be maintained at optimum or at the percentage specified by the Contracting Officer. In locations not accessible to the rollers, the mixture shall be compacted with mechanical tampers. Compaction shall continue until each layer through the full depth is compacted to a satisfactory condition as determine by a proof roll. Remove any materials that are found to be unsatisfactory and replace them with satisfactory material or rework them to produce a satisfactory material.

3.4 PREPARATION OF UNDERLYING COURSE SUBGRADE

Clean of all foreign substances the subgrade, including shoulders. At the time of surface course construction, the subgrade shall contain no frozen material. Ruts or soft yielding spots in the subgrade areas having inadequate compaction and deviations of the surface from the requirements set forth herein shall be corrected by loosening and removing soft or unsatisfactory material and by adding approved material, reshaping to line and grade and recompacting. The completed subgrade shall not be disturbed by traffic or other operations and shall be maintained by the Contractor in a satisfactory condition until the surface course is placed.

3.5 GRADE CONTROL

During construction, the lines and grades including crown and cross slope indicated for the aggregate surface course shall be maintained by means of line and grade stakes placed by the Contractor in accordance with the SPECIAL CONTRACT REQUIREMENTS.

3.6 MIXING AND PLACING MATERIALS

The materials shall be mixed and placed to obtain uniformity of the material and a uniform optimum water content for compaction. Make adjustments in mixing, placing procedures, or in equipment to obtain the true grades, to minimize segregation and degradation, to obtain the desired water content, and to ensure a satisfactory surface course.

3.7 LAYER THICKNESS

Place the aggregate material on the subgrade in layers of uniform thickness. When a compacted layer of 6 inches or less is specified, the material may be placed in a single layer; when a compacted thickness of more than 6 inches is required, no layer shall exceed 6 inches nor be less than 3 inches when compacted.

3.8 PROOF ROLLING

Proof rolling of the areas designated shall consist of application of 30 coverages with a heavy rubber-tired roller having four tires abreast with each tire loaded to 30,000 pounds and tires inflated to 150 psi. In the areas designated, proof rolling shall be applied to the top lift of layer on which surface course is laid and to each layer of the base course. Water content of the lift of the layer on which the surface course is placed and each layer of the aggregate surface course shall be maintained at optimum or at the percentage directed from the start of compaction to the completion of a proof rolling. Materials in the aggregate surface course or underlying materials indicated unacceptable by the proof rolling shall be removed and replaced, as directed, with acceptable materials.

3.9 EDGES OF AGGREGATE-SURFACED ROAD

Approved material shall be placed along the edges of the aggregate surface course in such quantity as to compact to the thickness of the course being constructed. When the course is being constructed in two or more layers, at least 1 foot of shoulder width shall be rolled and compacted simultaneously with the rolling and compacting of each layer of the surface course.

3.10 SMOOTHNESS TEST

The surface of each layer shall not show any deviations in excess of 3/8 inch when tested with a 10 foot straightedge applied both parallel with and at right angles to the centerline of the area to be paved. Deviations exceeding this amount shall be corrected by removing material, replacing with new material, or reworking existing material and compacting, as directed.

3.11 THICKNESS CONTROL

The completed thickness of the aggregate surface course shall be within 1/2 inch, plus or minus, of the thickness indicated on plans. The thickness of the aggregate surface course shall be measured at intervals in such manner that there will be a thickness measurement for at least each 500 square yards of the aggregate surface course. The thickness measurement shall be made by test holes at least 3 inches in diameter through the aggregate surface course. When the measured thickness of the aggregate surface course is more than 1/2 inch deficient in thickness, correct such areas by scarifying, adding mixture of proper gradation, reblading, and recompacting, as directed,at no additional expense to the Government. Where the measured thickness of the aggregate surface course is more than 1/2 inch thicker than that indicated, it shall be considered as conforming with the specified thickness requirements plus 1/2 inch. The average job thickness shall be the average of the job measurements determined as specified above, but shall be within 1/4 inch of the thickness indicated. When the average job thickness fails to meet this criterion, make corrections by scarifying, adding or removing mixture of proper gradation, and reblading and recompacting, as directed, at no additional expense to the Government.

3.12 MAINTENANCE

Maintain the aggregate surface course in a condition that will meet all specification requirements until accepted.

-- End of Section --

SECTION 33 40 00

STORM DRAINAGE UTILITIES
02/10

PART 1 GENERAL

1.1 MEASUREMENT AND PAYMENT

1.1.1 Pipe Culverts and Storm Drains

The length of pipe installed will be measured along the centerlines of the pipe from end to end of pipe without deductions for diameter of manholes. Pipe will be paid for at the contract unit price for the number of linear feet of culverts or storm drains placed in the accepted work.

1.1.2 Storm Drainage Structures

The quantity of manholes and inlets will be measured as the total number of manholes and inlets of the various types of construction, complete with frames and gratings or covers and, where indicated, with fixed side-rail ladders, constructed to the depth of [_____] feet in the accepted work. The depth of manholes and inlets will be measured from the top of grating or cover to invert of outlet pipe. Manholes and inlets constructed to depths greater than the depth specified above will be paid for as units at the contract unit price for manholes and inlets, plus an additional amount per linear foot for the measured depth beyond a depth of [_____] feet.

1.1.3 Walls and Headwalls

Walls and headwalls will be measured by the number of cubic yards of reinforced concrete, plain concrete, or masonry used in the construction of the walls and headwalls. Wall and headwalls will be paid for at the contract unit price for the number of walls and headwalls constructed in the completed work.

1.1.4 Flared End Sections

Flared end sections will be measured by the unit. Flared end sections will be paid for at the contract unit price for the various sizes in the accepted work.

1.1.5 Sheeting and Bracing

Payment will be made for that sheeting and bracing ordered to be left in place, based on the number of square feet of sheeting and bracing remaining below the surface of the ground.

1.1.6 Rock Excavation

Payment will be made for the number of cubic yards of material acceptably excavated, as specified and defined as rock excavation in Section 31 00 00 EARTHWORK, measured in the original position, and computed by allowing actual width of rock excavation with the following limitations: maximum rock excavation width, 30 inches for pipe of 12 inch or less nominal diameter; maximum rock excavation width, 16 inches greater than outside diameter of pipe of more than 12 inch nominal diameter. Measurement will

include authorized overdepth excavation. Payment will also include all necessary drilling and blasting, and all incidentals necessary for satisfactory excavation and disposal of authorized rock excavation. No separate payment will be made for backfill material required to replace rock excavation; this cost shall be included in the Contractor's unit price bid per cubic yard for rock excavation. In rock excavation for manholes and other appurtenances, 1 foot will be allowed outside the wall lines of the structures.

1.1.7 Backfill Replacing Unstable Material

Payment will be made for the number of cubic yards of select granular material required to replace unstable material for foundations under pipes or drainage structures, which will constitute full compensation for this backfill material, including removal and disposal of unstable material and all excavating, hauling, placing, compacting, and all incidentals necessary to complete the construction of the foundation satisfactorily.

1.1.8 Pipe Placed by Jacking

Payment will be made for the number of linear feet of jacked pipe accepted in the completed work measured along the centerline of the pipe in place.

1.2 REFERENCES

The publications listed below form a part of this specification to the extent referenced. The publications are referred to within the text by the basic designation only.

AMERICAN ASSOCIATION OF STATE HIGHWAY AND TRANSPORTATION OFFICIALS (AASHTO)

AASHTO HB-17	(2002; Errata 2003; Errata 2005, 17th Edition) Standard Specifications for Highway Bridges
AASHTO M 167M/M 167	(2009) Standard Specification for Corrugated Steel Structural Plate, Zinc-Coated, for Field-Bolted Pipe, Pipe-Arches, and Arches
AASHTO M 190	(2004; R 2012) Standard Specification for Bituminous Coated Corrugated Metal Culvert Pipe and Pipe Arches
AASHTO M 219	(1992; R 2012) Standard Specification for Corrugated Aluminum Alloy Structural Plate for Field-Bolted Pipe, Pipe-Arches, and Arches
AASHTO M 243	(1996; R 2012) Standard Specification for Field-Applied Coating of Corrugated Metal Structural Plate for Pipe, Pipe-Arches, and Arches
AASHTO M 294	(2013) Standard Specification for Corrugated Polyethylene Pipe, 300- to 1500-mm Diameter

AMERICAN CONCRETE INSTITUTE INTERNATIONAL (ACI)

ACI 346	(2009) Specification for Cast-in-Place Concrete Pipe

AMERICAN RAILWAY ENGINEERING AND MAINTENANCE-OF-WAY ASSOCIATION (AREMA)

AREMA Eng Man	(2012) Manual for Railway Engineering

ASTM INTERNATIONAL (ASTM)

ASTM A123/A123M	(2013) Standard Specification for Zinc (Hot-Dip Galvanized) Coatings on Iron and Steel Products
ASTM A48/A48M	(2003; R 2012) Standard Specification for Gray Iron Castings
ASTM A536	(1984; R 2009) Standard Specification for Ductile Iron Castings
ASTM A716	(2008) Standard Specification for Ductile Iron Culvert Pipe
ASTM A74	(2013a) Standard Specification for Cast Iron Soil Pipe and Fittings
ASTM A742/A742M	(2013) Standard Specification for Steel Sheet, Metallic Coated and Polymer Precoated for Corrugated Steel Pipe
ASTM A760/A760M	(2013) Standard Specification for Corrugated Steel Pipe, Metallic-Coated for Sewers and Drains
ASTM A762/A762M	(2008) Standard Specification for Corrugated Steel Pipe, Polymer Precoated for Sewers and Drains
ASTM A798/A798M	(2013) Standard Practice for Installing Factory-Made Corrugated Steel Pipe for Sewers and Other Applications
ASTM A807/A807M	(2013) Standard Practice for Installing Corrugated Steel Structural Plate Pipe for Sewers and Other Applications
ASTM A849	(2010) Standard Specification for Post-Applied Coatings, Pavings, and Linings for Corrugated Steel Sewer and Drainage Pipe
ASTM A929/A929M	(2001; R 2013) Standard Specification for Steel Sheet, Metallic-Coated by the Hot-Dip Process for Corrugated Steel Pipe
ASTM B26/B26M	(2012) Standard Specification for Aluminum-Alloy Sand Castings

ASTM B745/B745M	(2012) Standard Specification for Corrugated Aluminum Pipe for Sewers and Drains
ASTM C1103	(2003; R 2009) Standard Practice for Joint Acceptance Testing of Installed Precast Concrete Pipe Sewer Lines
ASTM C12	(2013a) Standard Practice for Installing Vitrified Clay Pipe Lines
ASTM C139	(2011) Standard Specification for Concrete Masonry Units for Construction of Catch Basins and Manholes
ASTM C14	(2011) Standard Specification for Concrete Sewer, Storm Drain, and Culvert Pipe
ASTM C1433	(2014) Standard Specification for Precast Reinforced Concrete Box Sections for Culverts, Storm Drains, and Sewers
ASTM C231/C231M	(2010) Standard Test Method for Air Content of Freshly Mixed Concrete by the Pressure Method
ASTM C270	(2012a) Standard Specification for Mortar for Unit Masonry
ASTM C32	(2013) Standard Specification for Sewer and Manhole Brick (Made from Clay or Shale)
ASTM C425	(2004; R 2013) Standard Specification for Compression Joints for Vitrified Clay Pipe and Fittings
ASTM C443	(2011) Standard Specification for Joints for Concrete Pipe and Manholes, Using Rubber Gaskets
ASTM C444	(2003; R 2009) Perforated Concrete Pipe
ASTM C478	(2013) Standard Specification for Precast Reinforced Concrete Manhole Sections
ASTM C506	(2013a) Standard Specification for Reinforced Concrete Arch Culvert, Storm Drain, and Sewer Pipe
ASTM C507	(2013) Standard Specification for Reinforced Concrete Elliptical Culvert, Storm Drain, and Sewer Pipe
ASTM C55	(2011) Concrete Brick
ASTM C564	(2012) Standard Specification for Rubber Gaskets for Cast Iron Soil Pipe and Fittings

ASTM C62	(2013a) Building Brick (Solid Masonry Units Made from Clay or Shale)
ASTM C655	(2014) Reinforced Concrete D-Load Culvert, Storm Drain, and Sewer Pipe
ASTM C700	(2013) Standard Specification for Vitrified Clay Pipe, Extra Strength, Standard Strength, and Perforated
ASTM C76	(2014) Standard Specification for Reinforced Concrete Culvert, Storm Drain, and Sewer Pipe
ASTM C828	(2011) Low-Pressure Air Test of Vitrified Clay Pipe Lines
ASTM C877	(2008) External Sealing Bands for Concrete Pipe, Manholes, and Precast Box Sections
ASTM C923	(2008; R 2013) Standard Specification for Resilient Connectors Between Reinforced Concrete Manhole Structures, Pipes and Laterals
ASTM C924	(2002; R 2009) Testing Concrete Pipe Sewer Lines by Low-Pressure Air Test Method
ASTM C990	(2009) Standard Specification for Joints for Concrete Pipe, Manholes and Precast Box Sections Using Preformed Flexible Joint Sealants
ASTM D1056	(2007) Standard Specification for Flexible Cellular Materials - Sponge or Expanded Rubber
ASTM D1171	(1999; R 2007) Rubber Deterioration - Surface Ozone Cracking Outdoors or Chamber (Triangular Specimens)
ASTM D1557	(2012) Standard Test Methods for Laboratory Compaction Characteristics of Soil Using Modified Effort (56,000 ft-lbf/ft3) (2700 kN-m/m3)
ASTM D1751	(2004; E 2013; R 2013) Standard Specification for Preformed Expansion Joint Filler for Concrete Paving and Structural Construction (Nonextruding and Resilient Bituminous Types)
ASTM D1752	(2004a; R 2013) Standard Specification for Preformed Sponge Rubber Cork and Recycled PVC Expansion
ASTM D1784	(2011) Standard Specification for Rigid Poly(Vinyl Chloride) (PVC) Compounds and

	Chlorinated Poly(Vinyl Chloride) (CPVC) Compounds
ASTM D2167	(2008) Density and Unit Weight of Soil in Place by the Rubber Balloon Method
ASTM D2321	(2011) Standard Practice for Underground Installation of Thermoplastic Pipe for Sewers and Other Gravity-Flow Applications
ASTM D2729	(2011) Poly(Vinyl Chloride) (PVC) Sewer Pipe and Fittings
ASTM D3034	(2008) Standard Specification for Type PSM Poly(Vinyl Chloride) (PVC) Sewer Pipe and Fittings
ASTM D3212	(2007; R 2013) Standard Specification for Joints for Drain and Sewer Plastic Pipes Using Flexible Elastomeric Seals
ASTM D3350	(2012) Polyethylene Plastics Pipe and Fittings Materials
ASTM D6938	(2010) Standard Test Method for In-Place Density and Water Content of Soil and Soil-Aggregate by Nuclear Methods (Shallow Depth)
ASTM F1417	(2011a) Standard Test Method for Installation Acceptance of Plastic Gravity Sewer Lines Using Low Pressure Air
ASTM F2736	(2013) Standard Specification for 6 to 30 in. (152 To 762 mm) Polypropylene (PP) Corrugated Single Wall Pipe And Double Wall Pipe
ASTM F2764/F2764M	(2011; E 2013) Standard Specification for 30 to 60 in. [750 to 1500 mm] Polypropylene (PP) Triple Wall Pipe and Fittings for Non-Pressure Sanitary Sewer Applications
ASTM F2881	(2011) Standard Specification for 12 to 60 in. (300 to 1500 mm) Polypropylene (PP) Dual Wall Pipe and Fittings for Non-Pressure Storm Sewer Applications
ASTM F477	(2010) Standard Specification for Elastomeric Seals (Gaskets) for Joining Plastic Pipe
ASTM F679	(2013a) Poly(Vinyl Chloride) (PVC) Large-Diameter Plastic Gravity Sewer Pipe and Fittings
ASTM F714	(2013) Polyethylene (PE) Plastic Pipe (SDR-PR) Based on Outside Diameter

ASTM F794	(2003; R 2009) Standard Specification for Poly(Vinyl Chloride) (PVC) Profile Gravity Sewer Pipe and Fittings Based on Controlled Inside Diameter
ASTM F894	(2013) Polyethylene (PE) Large Diameter Profile Wall Sewer and Drain Pipe
ASTM F949	(2010) Poly(Vinyl Chloride) (PVC) Corrugated Sewer Pipe with a Smooth Interior and Fittings

1.3 SUBMITTALS

Government approval is required for submittals with a "G" designation; submittals not having a "G" designation are for [Contractor Quality Control approval.] [information only. When used, a designation following the "G" designation identifies the office that will review the submittal for the Government.] Submit the following in accordance with Section 01 33 00 SUBMITTAL PROCEDURES:

SD-03 Product Data

Placing Pipe

Submit printed copies of the manufacturer's recommendations for installation procedures of the material being placed, prior to installation.

SD-04 Samples

Pipe for Culverts and Storm Drains

SD-07 Certificates

Resin Certification
Pipeline Testing
Hydrostatic Test on Watertight Joints
Determination of Density
Frame and Cover for Gratings

1.4 DELIVERY, STORAGE, AND HANDLING

1.4.1 Delivery and Storage

Materials delivered to site shall be inspected for damage, unloaded, and stored with a minimum of handling. Materials shall not be stored directly on the ground. The inside of pipes and fittings shall be kept free of dirt and debris. Before, during, and after installation, plastic pipe and fittings shall be protected from any environment that would result in damage or deterioration to the material. Keep a copy of the manufacturer's instructions available at the construction site at all times and follow these instructions unless directed otherwise by the Contracting Officer. Solvents, solvent compounds, lubricants, elastomeric gaskets, and any similar materials required to install plastic pipe shall be stored in accordance with the manufacturer's recommendations and shall be discarded if the storage period exceeds the recommended shelf life. Solvents in use shall be discarded when the recommended pot life is exceeded.

1.4.2 Handling

Materials shall be handled in a manner that ensures delivery to the trench in sound, undamaged condition. Pipe shall be carried to the trench, not dragged.

PART 2 PRODUCTS

2.1 PIPE FOR CULVERTS AND STORM DRAINS

Pipe for culverts and storm drains shall be of the sizes indicated and shall conform to the requirements specified.

2.1.1 Concrete Pipe

Manufactured in accordance with and conforming to ASTM C76, Class [I] [II] [III] [IV] [V], or ASTM C655, [_____] D-Load.

2.1.1.1 Reinforced Arch Culvert and Storm Drainpipe

Manufactured in accordance with and conforming to ASTM C506, Class [A-II] [A-III] [A-IV].

2.1.1.2 Reinforced Elliptical Culvert and Storm Drainpipe

Manufactured in accordance with and conforming to ASTM C507. Horizontal elliptical pipe shall be Class [HE-A] [HE-I] [HE-II] [HE-III] [HE-IV]. Vertical elliptical pipe shall be Class [VE-II] [VE-III] [VE-IV] [VE-V] [VE-VI].

2.1.1.3 Nonreinforced Pipe

Manufactured in accordance with and conforming to ASTM C14, Class [1] [2] [3].

2.1.1.4 Cast-In-Place Nonreinforced Conduit

ACI 346, except that testing shall be the responsibility of and at the expense of the Contractor. In the case of other conflicts between ACI 346 and project specifications, requirements of ACI 346 shall govern.

2.1.2 Clay Pipe

Standard or extra strength, as indicated, conforming to ASTM C700.

2.1.3 Corrugated Steel Pipe

ASTM A760/A760M, zinc or aluminum (Type 2) coated pipe of either:

a. Type [I] [II] pipe with [annular] [helical] 2-2/3 by 1/2 inch corrugations.

b. Type [IR] [IIR] pipe with helical 3/4 by 3/4 by 7-1/2 inch corrugations.

2.1.3.1 Fully Bituminous Coated

AASHTO M 190 Type A and ASTM A760/A760M zinc or aluminum (Type 2) coated pipe of either:

a. Type [I] [II] pipe with [annular] [helical] 2-2/3 by 1/2 inch corrugations.

b. Type [IR] [IIR] pipe with helical 3/4 by 3/4 by 7-1/2 inch corrugations.

2.1.3.2 Half Bituminous Coated, Part Paved

AASHTO M 190 Type B and ASTM A760/A760M zinc or aluminum (Type 2) coated Type [I] [II] pipe with [annular] [helical] 2-2/3 by 1/2 inch corrugations.

2.1.3.3 Fully Bituminous Coated, Part Paved

AASHTO M 190 Type C and ASTM A760/A760M zinc or aluminum (Type 2) coated Type [I] [II] pipe with [annular] [helical] 2-2/3 by 1/2 inch corrugations.

2.1.3.4 Fully Bituminous Coated, Fully Paved

AASHTO M 190 Type D and ASTM A760/A760M zinc or aluminum (Type 2) coated Type [I] [II] pipe with [annular] [helical] 2-2/3 by 1/2 inch corrugations.

2.1.3.5 Concrete-Lined

ASTM A760/A760M zinc coated Type I corrugated steel pipe with [annular] [helical] 2-2/3 by 1/2 inch corrugations and a concrete lining in accordance with ASTM A849.

2.1.3.6 Polymer Precoated

ASTM A762/A762M corrugated steel pipe fabricated from ASTM A742/A742M Grade 10/10 polymer precoated sheet of either:

a. Type [I] [II] pipe with [annular] [helical] 2-2/3 by 1/2 inch corrugations.

b. Type [IR] [IIR] pipe with helical 3/4 by 3/4 by 7-1/2 inch corrugations.

2.1.3.7 Polymer Precoated, Part Paved

ASTM A762/A762M Type [I] [II] corrugated steel pipe and AASHTO M 190 Type B (modified), paved invert only, fabricated from ASTM A742/A742M Grade 10/10 polymer precoated sheet with [annular] [helical] 2-2/3 by 1/2 inch corrugations.

2.1.3.8 Polymer Precoated, Fully Paved

ASTM A762/A762M Type [I] [II] corrugated steel pipe and AASHTO M 190 Type D (modified), fully paved only, fabricated from ASTM A742/A742M Grade 10/10 polymer precoated sheet with [annular] [helical] 2-2/3 by 1/2 inch corrugations.

2.1.4 Corrugated Aluminum Alloy Pipe

ASTM B745/B745M corrugated aluminum alloy pipe of either:

a. Type [I] [II] pipe with [annular] [helical] corrugations.

b. Type [IA] [IR] [IIA] [IIR] pipe with helical corrugations.

2.1.4.1 Aluminum Fully Bituminous Coated

Bituminous coating shall conform to ASTM A849 Type [_____]. Piping shall conform to AASHTO M 190 Type A and ASTM B745/B745M corrugated aluminum alloy pipe of either:

a. Type [I] [II] pipe with [annular] [helical] corrugations.

b. Type [IA] [IR] [IIA] [IIR] pipe with helical corrugations.

2.1.4.2 Aluminum Fully Bituminous Coated, Part Paved

Bituminous coating shall conform to ASTM A849 Type [_____]. Piping shall conform to AASHTO M 190 Type C and ASTM B745/B745M corrugated aluminum alloy pipe of either:

a. Type [I] [II] pipe with [annular] [helical] corrugations.

b. Type [IR] [IIR] pipe with helical corrugations.

2.1.5 Structural Plate, Steel Pipe, Pipe Arches and Arches

Assembled with galvanized steel nuts and bolts, from galvanized corrugated steel plates conforming to AASHTO M 167M/M 167. Pipe coating, when required, shall conform to the requirements of [AASHTO M 190 Type A] [AASHTO M 243]. Thickness of plates shall be as indicated.

2.1.6 Structural Plate, Aluminum Pipe, Pipe Arches and Arches

Assembled with either aluminum alloy, aluminum coated steel, stainless steel or zinc coated steel nuts and bolts. Nuts and bolts, and aluminum alloy plates shall conform to AASHTO M 219. Pipe coating, when required, shall conform to the requirements of [AASHTO M 190, Type A] [AASHTO M 243]. Thickness of plates shall be as indicated.

2.1.7 Ductile Iron Culvert Pipe

ASTM A716.

2.1.8 Cast-Iron Soil Piping

Cast-Iron Soil Pipe shall conform to ASTM A74, service-weight; gaskets shall be compression-type rubber conforming to ASTM C564.

2.1.9 Perforated Piping

2.1.9.1 Clay Pipe

ASTM C700, [standard] [extra] strength.

2.1.9.2 Concrete Pipe

Manufactured in accordance with and conforming to ASTM C444, and applicable requirements of ASTM C14, Class [_____].

2.1.9.3 Corrugated Steel Pipe

ASTM A760/A760M, Type III, zinc-coated.

2.1.9.4 Corrugated Aluminum Pipe

ASTM B745/B745M, Type III.

2.1.9.5 Polyvinyl Chloride (PVC) Pipe

ASTM D2729.

2.1.9.6 Polypropylene (PP) Pipe

ASTM F2881, Class II perforation patterns.

2.1.10 PVC Pipe

Submit the pipe manufacturer's resin certification, indicating the cell classification of PVC used to manufacture the pipe, prior to installation of the pipe.

2.1.10.1 Type PSM PVC Pipe

ASTM D3034, Type PSM, maximum SDR 35, produced from PVC certified by the compounder as meeting the requirements of ASTM D1784, minimum cell class 12454-B.

2.1.10.2 Profile PVC Pipe

ASTM F794, Series 46, produced from PVC certified by the compounder as meeting the requirements of ASTM D1784, minimum cell class 12454-B.

2.1.10.3 Smooth Wall PVC Pipe

ASTM F679 produced from PVC certified by the compounder as meeting the requirements of ASTM D1784, minimum cell class 12454-B.

2.1.10.4 Corrugated PVC Pipe

ASTM F949 produced from PVC certified by the compounder as meeting the requirements of ASTM D1784, minimum cell class 12454-B.

2.1.11 Polyethylene (PE) Pipe

Submit the pipe manufacturer's resin certification, indicating the cell classification of PE used to manufacture the pipe, prior to installation of the pipe. The minimum cell classification for polyethylene plastic shall apply to each of the seven primary properties of the cell classification limits in accordance with ASTM D3350.

2.1.11.1 Smooth Wall PE Pipe

ASTM F714, maximum DR of 21 for pipes 3 to 24 inches in diameter and maximum DR of 26 for pipes 26 to 48 inches in diameter. Pipe shall be produced from PE certified by the resin producer as meeting the requirements of ASTM D3350, minimum cell class 335434C.

2.1.11.2 Corrugated PE Pipe

AASHTO M 294, Type S or C. For slow crack growth resistance, acceptance of resins shall be determined by using the notched constant ligament-stress

(NCLS) test meeting the requirements of AASHTO M 294. Pipe walls shall have the following properties:

Nominal Size (inch))	Minimum Wall Area (square in/ft)	Minimum Moment of Inertia of Wall Section (in. to the 4th/in.)
12	1.5	0.024
15	1.91	0.053
18	2.34	0.062
24	3.14	0.116
30	3.92	0.163
36	4.50	0.222
42	4.69	0.543
48	5.15	0.543
54	5.67	0.800
60	6.45	0.800

2.1.11.3 Profile Wall PE Pipe

ASTM F894, RSC 160, produced from PE certified by the resin producer as meeting the requirements of ASTM D3350, minimum cell class 334433C. Pipe walls shall have the following properties:

Nominal Size (inch)	Minimum Wall Area (square in/ft)	Minimum Moment of Inertia of Wall Section (in to the 4th/in)	
		Cell Class 334433C	Cell Class 335434C
18	2.96	0.052	0.038
21	4.15	0.070	0.051
24	4.66	0.081	0.059
27	5.91	0.125	0.091
30	5.91	0.125	0.091
33	6.99	0.161	0.132
36	7.81	0.202	0.165
42	8.08	0.277	0.227

Nominal Size (inch)	Minimum Wall Area (square in/ft)	Minimum Moment of Inertia of Wall Section (in to the 4th/in)	
		Cell Class 334433C	Cell Class 335434C
48	8.82	0.338	0.277

2.1.12 PP Pipe

Double wall and triple wall pipe with a diameter of 12 to 60 inches shall meet the requirements of ASTM F2736, ASTM F2764/F2764M, or ASTM F2881.

2.2 DRAINAGE STRUCTURES

2.2.1 Flared End Sections

Sections shall be of a standard design fabricated from zinc coated steel sheets meeting requirements of ASTM A929/A929M.

2.2.2 Precast Reinforced Concrete Box

Manufactured in accordance with and conforming to ASTM C1433.

2.3 MISCELLANEOUS MATERIALS

2.3.1 Concrete

Unless otherwise specified, concrete and reinforced concrete shall conform to the requirements for [_____] psi concrete under Section [03 30 00.00 10 CAST-IN-PLACE CONCRETE] [03 30 00 CAST-IN-PLACE CONCRETE]. The concrete mixture shall have air content by volume of concrete, based on measurements made immediately after discharge from the mixer, of 5 to 7 percent when maximum size of coarse aggregate exceeds 1-1/2 inches. Air content shall be determined in accordance with ASTM C231/C231M. The concrete covering over steel reinforcing shall not be less than 1 inch thick for covers and not less than 1-1/2 inches thick for walls and flooring. Concrete covering deposited directly against the ground shall have a thickness of at least 3 inches between steel and ground. Expansion-joint filler material shall conform to ASTM D1751, or ASTM D1752, or shall be resin-impregnated fiberboard conforming to the physical requirements of ASTM D1752.

2.3.2 Mortar

Mortar for pipe joints, connections to other drainage structures, and brick or block construction shall conform to ASTM C270, Type M, except that the maximum placement time shall be 1 hour. The quantity of water in the mixture shall be sufficient to produce a stiff workable mortar but in no case shall exceed [_____] gallons of water per sack of cement. Water shall be clean and free of harmful acids, alkalis, and organic impurities. The mortar shall be used within 30 minutes after the ingredients are mixed with water. The inside of the joint shall be wiped clean and finished smooth. The mortar head on the outside shall be protected from air and sun with a proper covering until satisfactorily cured.

2.3.3 Precast Concrete Segmental Blocks

Precast concrete segmental block shall conform to ASTM C139, not more than

8 inches thick, not less than 8 inches long, and of such shape that joints can be sealed effectively and bonded with cement mortar.

2.3.4 Brick

Brick shall conform to ASTM C62, Grade SW; ASTM C55, Grade S-I or S-II; or ASTM C32, Grade MS. Mortar for jointing and plastering shall consist of one part portland cement and two parts fine sand. Lime may be added to the mortar in a quantity not more than 25 percent of the volume of cement. The joints shall be filled completely and shall be smooth and free from surplus mortar on the inside of the structure. Brick structures shall be plastered with 1/2 inch of mortar over the entire outside surface of the walls. For square or rectangular structures, brick shall be laid in stretcher courses with a header course every sixth course. For round structures, brick shall be laid radially with every sixth course a stretcher course.

2.3.5 Precast Reinforced Concrete Manholes

Conform to ASTM C478. Joints between precast concrete risers and tops shall be [full-bedded in cement mortar and shall be smoothed to a uniform surface on both interior and exterior of the structure] [made with flexible watertight, rubber-type gaskets meeting the requirements of paragraph JOINTS].

2.3.6 Prefabricated Corrugated Metal Manholes

Manholes shall be of the type and design recommended by the manufacturer. Manholes shall be complete with frames and cover, or frames and gratings.

2.3.7 Frame and Cover for Gratings

Submit certification on the ability of frame and cover or gratings to carry the imposed live load. Frame and cover for gratings shall be cast gray iron, ASTM A48/A48M, Class 35B; cast ductile iron, ASTM A536, Grade 65-45-12; or cast aluminum, ASTM B26/B26M, Alloy 356.OT6. Weight, shape, size, and waterway openings for grates and curb inlets shall be as indicated on the plans. The word "Storm Sewer" shall be stamped or cast into covers so that it is plainly visible.

2.3.8 Joints

2.3.8.1 Flexible Watertight Joints

a. Materials: Flexible watertight joints shall be made with plastic or rubber-type gaskets for concrete pipe and with factory-fabricated resilient materials for clay pipe. The design of joints and the physical requirements for preformed flexible joint sealants shall conform to ASTM C990, and rubber-type gaskets shall conform to ASTM C443. Factory-fabricated resilient joint materials shall conform to ASTM C425. Gaskets shall have not more than one factory-fabricated splice, except that two factory-fabricated splices of the rubber-type gasket are permitted if the nominal diameter of the pipe being gasketed exceeds 54 inches.

b. Test Requirements: Watertight joints shall be tested and shall meet test requirements of paragraph HYDROSTATIC TEST ON WATERTIGHT JOINTS. Rubber gaskets shall comply with the oil resistant gasket requirements of ASTM C443. Certified copies of test results shall be delivered to the Contracting Officer before gaskets or jointing materials are

installed. Alternate types of watertight joint may be furnished, if specifically approved.

2.3.8.2 External Sealing Bands

Requirements for external sealing bands shall conform to ASTM C877.

2.3.8.3 Flexible Watertight, Gasketed Joints

a. Gaskets: When infiltration or exfiltration is a concern for pipe lines, the couplings may be required to have gaskets. The closed-cell expanded rubber gaskets shall be a continuous band approximately 7 inches wide and approximately 3/8 inch thick, meeting the requirements of ASTM D1056, Type 2 [A1] [B3] [_____], and shall have a quality retention rating of not less than 70 percent when tested for weather resistance by ozone chamber exposure, Method B of ASTM D1171. Rubber O-ring gaskets shall be 13/16 inch in diameter for pipe diameters of 36 inches or smaller and 7/8 inch in diameter for larger pipe having 1/2 inch deep end corrugation. Rubber O-ring gaskets shall be 1-3/8 inches in diameter for pipe having 1 inch deep end corrugations. O-rings shall meet the requirements of ASTM C990 or ASTM C443. Preformed flexible joint sealants shall conform to ASTM C990, Type B.

b. Connecting Bands: Connecting bands shall be of the type, size and sheet thickness of band, and the size of angles, bolts, rods and lugs as indicated or where not indicated as specified in the applicable standards or specifications for the pipe. Exterior rivet heads in the longitudinal seam under the connecting band shall be countersunk or the rivets shall be omitted and the seam welded. Watertight joints shall be tested and shall meet the test requirements of paragraph HYDROSTATIC TEST ON WATERTIGHT JOINTS.

2.3.8.4 PVC Plastic Pipes

Joints shall be solvent cement or elastomeric gasket type in accordance with the specification for the pipe and as recommended by the pipe manufacturer.

2.3.8.5 Smooth Wall PE Plastic Pipe

Pipe shall be joined using butt fusion method as recommended by the pipe manufacturer.

2.3.8.6 Corrugated PE Plastic Pipe

Pipe joints shall be [soil] [silt] [water] tight and shall conform to the requirements in AASHTO M 294.[Water tight joints shall be made using a PE coupling and rubber gaskets as recommended by the pipe manufacturer. Rubber gaskets shall conform to ASTM F477.]

2.3.8.7 Profile Wall PE Plastic Pipe

Joints shall be gasketed or thermal weld type with integral bell in accordance with ASTM F894.

2.3.8.8 Ductile Iron Pipe

Couplings and fittings shall be as recommended by the pipe manufacturer.

2.3.8.9 Dual Wall and Triple Wall PP Pipe

Spigot shall have two gaskets meeting the requirements of ASTM F477. Gaskets shall be installed by the pipe manufacturer and covered with a removable, protective wrap to ensure the gaskets are free from debris. Use a joint lubricant available from the manufacturer on the gasket and bell during assembly. [ASTM F2881 for 12 to 60 inches pipe][ASTM F2736 for 12 to 30 inches pipe][ASTM F2764/F2764M for 30 to 60 inches pipe] diameters shall have a reinforced bell with a polymer composite band installed by the manufacturer. Fittings shall conform to [ASTM F2881] [ASTM F2736] [ASTM F2764/F2764M]. Bell and spigot connections shall utilize a spun-on, welded or integral bell and spigot with gaskets meeting ASTM F477.

2.3.9 Flap Gates

Flap Gates shall be [medium] [or] [heavy]-duty with [circular] [rectangular] opening and double-hinged. [Top pivot points shall be adjustable.] The seat shall be one-piece cast iron with a raised section around the perimeter of the waterway opening to provide the seating face. The seating face of the seat shall be [cast iron] [bronze] [stainless steel] [neoprene]. The cover shall be one-piece cast iron with necessary reinforcing rib, lifting eye for manual operation, and bosses to provide a pivot point connection with the links. The seating face of the cover shall be [cast iron] [bronze] [stainless steel] [neoprene]. Links or hinge arms shall be cast or ductile iron. Holes of pivot points shall be bronze bushed. All fasteners shall be either galvanized steel, bronze or stainless steel.

2.4 STEEL LADDER

Steel ladder shall be provided where the depth of the storm drainage structure exceeds 12 feet. These ladders shall be not less than 16 inches in width, with 3/4 inch diameter rungs spaced 12 inches apart. The two stringers shall be a minimum 3/8 inch thick and 2-1/2 inches wide. Ladders and inserts shall be galvanized after fabrication in conformance with ASTM A123/A123M.

2.5 DOWNSPOUT BOOTS

Boots used to connect exterior downspouts to the storm-drainage system shall be of gray cast iron conforming to ASTM A48/A48M, Class 30B or 35B. Shape and size shall be as indicated.

2.6 RESILIENT CONNECTORS

Flexible, watertight connectors used for connecting pipe to manholes and inlets shall conform to ASTM C923.

2.7 HYDROSTATIC TEST ON WATERTIGHT JOINTS

2.7.1 Concrete, Clay, PVC, PE and PP Pipe

A hydrostatic test shall be made on the watertight joint types as proposed. Only one sample joint of each type needs testing; however, if the sample joint fails because of faulty design or workmanship, an additional sample joint may be tested. During the test period, gaskets or other jointing material shall be protected from extreme temperatures which might adversely affect the performance of such materials. Performance requirements for joints in reinforced and nonreinforced concrete pipe shall

conform to ASTM C990 or ASTM C443. Test requirements for joints in clay pipe shall conform to ASTM C425. Test requirements for joints in PVC, PE, and PP plastic pipe shall conform to ASTM D3212.

2.7.2 Corrugated Steel and Aluminum Pipe

A hydrostatic test shall be made on the watertight joint system or coupling band type proposed. The moment strength required of the joint is expressed as 15 percent of the calculated moment capacity of the pipe on a transverse section remote from the joint by the AASHTO HB-17 (Division II, Section 26). The pipe shall be supported for the hydrostatic test with the joint located at the point which develops 15 percent of the moment capacity of the pipe based on the allowable span in feet for the pipe flowing full or 40,000 foot-pounds, whichever is less. Performance requirements shall be met at an internal hydrostatic pressure of 10 psi, for a 10 minute period for both annular corrugated metal pipe and helical corrugated metal pipe with factory reformed ends.

2.8 EROSION CONTROL RIPRAP

Provide nonerodible rock not exceeding 15 inches in its greatest dimension and choked with sufficient small rocks to provide a dense mass with a minimum thickness of [8 inches] [as indicated].

PART 3 EXECUTION

3.1 EXCAVATION FOR PIPE CULVERTS, STORM DRAINS, AND DRAINAGE STRUCTURES

Excavation of trenches, and for appurtenances and backfilling for culverts and storm drains, shall be in accordance with the applicable portions of Section 31 00 00 EARTHWORK and the requirements specified below.

3.1.1 Trenching

The width of trenches at any point below the top of the pipe shall be not greater than the outside diameter of the pipe plus [_____] inches to permit satisfactory jointing and thorough tamping of the bedding material under and around the pipe. Sheeting and bracing, where required, shall be placed within the trench width as specified, without any overexcavation. Where trench widths are exceeded, redesign with a resultant increase in cost of stronger pipe or special installation procedures will be necessary. Cost of this redesign and increased cost of pipe or installation shall be borne by the Contractor without additional cost to the Government.

3.1.2 Removal of Rock

Rock in either ledge or boulder formation shall be replaced with suitable materials to provide a compacted earth cushion having a thickness between unremoved rock and the pipe of at least 8 inches or 1/2 inch for each foot of fill over the top of the pipe, whichever is greater, but not more than three-fourths the nominal diameter of the pipe. Where bell-and-spigot pipe is used, the cushion shall be maintained under the bell as well as under the straight portion of the pipe. Rock excavation shall be as specified and defined in Section 31 00 00 EARTHWORK.

3.1.3 Removal of Unstable Material

Where wet or otherwise unstable soil incapable of properly supporting the pipe, as determined by the Contracting Officer, is unexpectedly encountered

in the bottom of a trench, such material shall be removed to the depth required and replaced to the proper grade with select granular material, compacted as provided in paragraph BACKFILLING. When removal of unstable material is due to the fault or neglect of the Contractor while performing shoring and sheeting, water removal, or other specified requirements, such removal and replacement shall be performed at no additional cost to the Government.

3.2 BEDDING

The bedding surface for the pipe shall provide a firm foundation of uniform density throughout the entire length of the pipe.

3.2.1 Concrete Pipe Requirements

When no bedding class is specified or detailed on the drawings, concrete pipe shall be bedded in granular material minimum 4 inch in depth in trenches with soil foundation. Depth of granular bedding in trenches with rock foundation shall be 1/2 inch in depth per foot of depth of fill, minimum depth of bedding shall be 8 inch up to maximum depth of 24 inches. The middle third of the granular bedding shall be loosely placed. Bell holes and depressions for joints shall be removed and formed so entire barrel of pipe is uniformly supported. The bell hole and depressions for the joints shall be not more than the length, depth, and width required for properly making the particular type of joint.

3.2.2 Clay Pipe Requirements

Bedding for clay pipe shall be as specified by ASTM C12.

3.2.3 Corrugated Metal Pipe

Bedding for corrugated metal pipe and pipe arch shall be in accordance with ASTM A798/A798M. It is not required to shape the bedding to the pipe geometry. However, for pipe arches, either shape the bedding to the relatively flat bottom arc or fine grade the foundation to a shallow v-shape. Bedding for corrugated structural plate pipe shall meet requirements of ASTM A807/A807M.

3.2.4 Ductile Iron and Cast-Iron Pipe

Bedding for ductile iron and cast-iron pipe shall be as shown on the drawings.

3.2.5 Plastic Pipe

Bedding for PVC, PE, and PP pipe shall meet the requirements of ASTM D2321. Use Class IB or II material for bedding, haunching, and initial backfill. Use Class I, II, or III material for PP pipe bedding, haunching and initial backfill.

3.3 PLACING PIPE

Each pipe shall be thoroughly examined before being laid; defective or damaged pipe shall not be used. Plastic pipe shall be protected from exposure to direct sunlight prior to laying, if necessary to maintain adequate pipe stiffness and meet installation deflection requirements. Pipelines shall be laid to the grades and alignment indicated. Proper facilities shall be provided for lowering sections of pipe into trenches.

Lifting lugs in vertically elongated metal pipe shall be placed in the same vertical plane as the major axis of the pipe. Pipe shall not be laid in water, and pipe shall not be laid when trench conditions or weather are unsuitable for such work. Diversion of drainage or dewatering of trenches during construction shall be provided as necessary. Deflection of installed flexible pipe shall not exceed the following limits:

TYPE OF PIPE	MAXIMUM ALLOWABLE DEFLECTION (percent)
Corrugated Steel and Aluminum Alloy	5
Concrete-Lined Corrugated Steel	3
Ductile Iron Culvert	3
Plastic (PVC, HDPE and PP)	5

Note post installation requirements of paragraph DEFLECTION TESTING in PART 3 of this specification for all pipe products including deflection testing requirements for flexible pipe.

3.3.1 Concrete, Clay, PVC, Ribbed PVC, Ductile Iron and Cast-Iron Pipe

Laying shall proceed upgrade with spigot ends of bell-and-spigot pipe and tongue ends of tongue-and-groove pipe pointing in the direction of the flow.

3.3.2 Elliptical and Elliptical Reinforced Concrete Pipe

The manufacturer's reference lines, designating the top of the pipe, shall be within 5 degrees of a vertical plane through the longitudinal axis of the pipe, during placement. Damage to or misalignment of the pipe shall be prevented in all backfilling operations.

3.3.3 Corrugated PE and Dual Wall and Triple Wall PP Pipe

Laying shall be with the separate sections joined firmly on a bed shaped to line and grade and shall follow manufacturer's recommendations.

3.3.4 Corrugated Metal Pipe and Pipe Arch

Laying shall be with the separate sections joined firmly together, with the outside laps of circumferential joints pointing upstream, and with longitudinal laps on the sides. Part paved pipe shall be installed so that the centerline of bituminous pavement in the pipe, indicated by suitable markings on the top at each end of the pipe sections, coincides with the specified alignment of pipe. Fully paved steel pipe or pipe arch shall have a painted or otherwise applied label inside the pipe or pipe arch indicating sheet thickness of pipe or pipe arch. Any unprotected metal in the joints shall be coated with bituminous material as specified in AASHTO M 190 or AASHTO M 243. Interior coating shall be protected against damage from insertion or removal of struts or tie wires. Lifting lugs shall be used to facilitate moving pipe without damage to exterior or interior coatings. During transportation and installation, pipe or pipe arch and coupling bands shall be handled with care to preclude damage to the coating, paving or lining. Damaged coatings, pavings and linings shall be repaired in accordance with the manufacturer's recommendations prior to placing backfill. Pipe on which coating, paving or lining has been damaged to such an extent that satisfactory field repairs cannot be made shall be

removed and replaced. Vertical elongation, where indicated, shall be accomplished by factory elongation. Suitable markings or properly placed lifting lugs shall be provided to ensure placement of factory elongated pipe in a vertical plane.

3.3.5 Structural-Plate Steel

Structural plate shall be installed in accordance with ASTM A807/A807M. Structural plate shall be assembled in accordance with instructions furnished by the manufacturer. Instructions shall show the position of each plate and the order of assembly. Bolts shall be tightened progressively and uniformly, starting at one end of the structure after all plates are in place. The operation shall be repeated to ensure that all bolts are tightened to meet the torque requirements of 200 foot-pounds plus or minus 50 foot-pounds. Any power wrenches used shall be checked by the use of hand torque wrenches or long-handled socket or structural wrenches for amount of torque produced. Power wrenches shall be checked and adjusted frequently as needed, according to type or condition, to ensure proper adjustment to supply the required torque.

3.3.6 Structural-Plate Aluminum

Structural plate shall be assembled in accordance with instructions furnished by the manufacturer. Instructions shall show the position of each plate and the order of assembly. Bolts shall be tightened progressively and uniformly, starting at one end of the structure after all plates are in place. The operation shall be repeated to ensure that all bolts are torqued to a minimum of 100 foot-pounds on aluminum alloy bolts and a minimum of 150 foot-pounds on galvanized steel bolts. Any power wrenches used shall be checked by the use of hand torque wrenches or long-handled socket or structural wrenches for the amount of torque produced. Power wrenches shall be checked and adjusted as frequently as needed, according to type or condition, to ensure that they are in proper adjustment to supply the required torque.

3.3.7 Multiple Culverts

Where multiple lines of pipe are installed, adjacent sides of pipe shall be at least half the nominal pipe diameter or 3 feet apart, whichever is less.

3.3.8 Jacking Pipe Through Fills

Methods of operation and installation for jacking pipe through fills shall conform to requirements specified in Volume 1, Chapter 1, Part 4 of AREMA Eng Man.

3.4 JOINTING

3.4.1 Concrete and Clay Pipe

3.4.1.1 Cement-Mortar Bell-and-Spigot Joint

The first pipe shall be bedded to the established grade line, with the bell end placed upstream. The interior surface of the bell shall be thoroughly cleaned with a wet brush and the lower portion of the bell filled with mortar as required to bring inner surfaces of abutting pipes flush and even. The spigot end of each subsequent pipe shall be cleaned with a wet brush and uniformly matched into a bell so that sections are closely fitted. After each section is laid, the remainder of the joint shall be

filled with mortar, and a bead shall be formed around the outside of the joint with sufficient additional mortar. If mortar is not sufficiently stiff to prevent appreciable slump before setting, the outside of the joint shall be wrapped or bandaged with cheesecloth to hold mortar in place.

3.4.1.2 Cement-Mortar Oakum Joint for Bell-and-Spigot Pipe

A closely twisted gasket shall be made of jute or oakum of the diameter required to support the spigot end of the pipe at the proper grade and to make the joint concentric. Joint packing shall be in one piece of sufficient length to pass around the pipe and lap at top. This gasket shall be thoroughly saturated with neat cement grout. The bell of the pipe shall be thoroughly cleaned with a wet brush, and the gasket shall be laid in the bell for the lower third of the circumference and covered with mortar. The spigot of the pipe shall be thoroughly cleaned with a wet brush, inserted in the bell, and carefully driven home. A small amount of mortar shall be inserted in the annular space for the upper two-thirds of the circumference. The gasket shall be lapped at the top of the pipe and driven home in the annular space with a caulking tool. The remainder of the annular space shall be filled completely with mortar and beveled at an angle of approximately 45 degrees with the outside of the bell. If mortar is not sufficiently stiff to prevent appreciable slump before setting, the outside of the joint thus made shall be wrapped with cheesecloth. Placing of this type of joint shall be kept at least five joints behind laying operations.

3.4.1.3 Cement-Mortar Diaper Joint for Bell-and-Spigot Pipe

The pipe shall be centered so that the annular space is uniform. The annular space shall be caulked with jute or oakum. Before caulking, the inside of the bell and the outside of the spigot shall be cleaned.

a. Diaper Bands: Diaper bands shall consist of heavy cloth fabric to hold grout in place at joints and shall be cut in lengths that extend one-eighth of the circumference of pipe above the spring line on one side of the pipe and up to the spring line on the other side of the pipe. Longitudinal edges of fabric bands shall be rolled and stitched around two pieces of wire. Width of fabric bands shall be such that after fabric has been securely stitched around both edges on wires, the wires will be uniformly spaced not less than 8 inches apart. Wires shall be cut into lengths to pass around pipe with sufficient extra length for the ends to be twisted at top of pipe to hold the band securely in place; bands shall be accurately centered around lower portion of joint.

b. Grout: Grout shall be poured between band and pipe from the high side of band only, until grout rises to the top of band at the spring line of pipe, or as nearly so as possible, on the opposite side of pipe, to ensure a thorough sealing of joint around the portion of pipe covered by the band. Silt, slush, water, or polluted mortar grout forced up on the lower side shall be forced out by pouring, and removed.

c. Remainder of Joint: The remaining unfilled upper portion of the joint shall be filled with mortar and a bead formed around the outside of this upper portion of the joint with a sufficient amount of additional mortar. The diaper shall be left in place. Placing of this type of joint shall be kept at least five joints behind actual laying of pipe. No backfilling around joints shall be done until joints have been fully inspected and approved.

3.4.1.4 Cement-Mortar Tongue-and-Groove Joint

The first pipe shall be bedded carefully to the established grade line with the groove upstream. A shallow excavation shall be made underneath the pipe at the joint and filled with mortar to provide a bed for the pipe. The grooved end of the first pipe shall be thoroughly cleaned with a wet brush, and a layer of soft mortar applied to the lower half of the groove. The tongue of the second pipe shall be cleaned with a wet brush; while in horizontal position, a layer of soft mortar shall be applied to the upper half of the tongue. The tongue end of the second pipe shall be inserted in the grooved end of the first pipe until mortar is squeezed out on interior and exterior surfaces. Sufficient mortar shall be used to fill the joint completely and to form a bead on the outside.

3.4.1.5 Cement-Mortar Diaper Joint for Tongue-and-Groove Pipe

The joint shall be of the type described for cement-mortar tongue-and-groove joint in this paragraph, except that the shallow excavation directly beneath the joint shall not be filled with mortar until after a gauze or cheesecloth band dipped in cement mortar has been wrapped around the outside of the joint. The cement-mortar bead at the joint shall be at least 1/2 inch, thick and the width of the diaper band shall be at least 8 inches. The diaper shall be left in place. Placing of this type of joint shall be kept at least five joints behind the actual laying of the pipe. Backfilling around the joints shall not be done until the joints have been fully inspected and approved.

3.4.1.6 Plastic Sealing Compound Joints for Tongue-and-Grooved Pipe

Sealing compounds shall follow the recommendation of the particular manufacturer in regard to special installation requirements. Surfaces to receive lubricants, primers, or adhesives shall be dry and clean. Sealing compounds shall be affixed to the pipe not more than 3 hours prior to installation of the pipe, and shall be protected from the sun, blowing dust, and other deleterious agents at all times. Sealing compounds shall be inspected before installation of the pipe, and any loose or improperly affixed sealing compound shall be removed and replaced. The pipe shall be aligned with the previously installed pipe, and the joint pulled together. If, while making the joint with mastic-type sealant, a slight protrusion of the material is not visible along the entire inner and outer circumference of the joint when the joint is pulled up, the pipe shall be removed and the joint remade. After the joint is made, all inner protrusions shall be cut off flush with the inner surface of the pipe. If non-mastic-type sealant material is used, the "Squeeze-Out" requirement above will be waived.

3.4.1.7 Flexible Watertight Joints

Gaskets and jointing materials shall be as recommended by the particular manufacturer in regard to use of lubricants, cements, adhesives, and other special installation requirements. Surfaces to receive lubricants, cements, or adhesives shall be clean and dry. Gaskets and jointing materials shall be affixed to the pipe not more than 24 hours prior to the installation of the pipe, and shall be protected from the sun, blowing dust, and other deleterious agents at all times. Gaskets and jointing materials shall be inspected before installing the pipe; any loose or improperly affixed gaskets and jointing materials shall be removed and replaced. The pipe shall be aligned with the previously installed pipe, and the joint pushed home. If, while the joint is being made the gasket

becomes visibly dislocated the pipe shall be removed and the joint remade.

3.4.1.8 External Sealing Band Joint for Noncircular Pipe

Surfaces to receive sealing bands shall be dry and clean. Bands shall be installed in accordance with manufacturer's recommendations.

3.4.2 Corrugated Metal Pipe

3.4.2.1 Field Joints

Transverse field joints shall be designed so that the successive connection of pipe sections will form a continuous line free of appreciable irregularities in the flow line. In addition, the joints shall meet the general performance requirements described in ASTM A798/A798M. Suitable transverse field joints which satisfy the requirements for one or more of the joint performance categories can be obtained with the following types of connecting bands furnished with suitable band-end fastening devices: corrugated bands, bands with projections, flat bands, and bands of special design that engage factory reformed ends of corrugated pipe. The space between the pipe and connecting bands shall be kept free from dirt and grit so that corrugations fit snugly. The connecting band, while being tightened, shall be tapped with a soft-head mallet of wood, rubber or plastic, to take up slack and ensure a tight joint. [The annular space between abutting sections of part paved, and fully paved pipe and pipe arch, in sizes 30 inches or larger, shall be filled with a bituminous material after jointing.] Field joints for each type of corrugated metal pipe shall maintain pipe alignment during construction and prevent infiltration of fill material during the life of the installations. The type, size, and sheet thickness of the band and the size of angles or lugs and bolts shall be as indicated or where not indicated, shall be as specified in the applicable standards or specifications for the pipe.

3.4.2.2 Flexible Watertight, Gasketed Joints

Installation shall be as recommended by the gasket manufacturer for use of lubricants and cements and other special installation requirements. The gasket shall be placed over one end of a section of pipe for half the width of the gasket. The other half shall be doubled over the end of the same pipe. When the adjoining section of pipe is in place, the doubled-over half of the gasket shall then be rolled over the adjoining section. Any unevenness in overlap shall be corrected so that the gasket covers the end of pipe sections equally. Connecting bands shall be centered over adjoining sections of pipe, and rods or bolts placed in position and nuts tightened. Band Tightening: The band shall be tightened evenly, even tension being kept on the rods or bolts, and the gasket; the gasket shall seat properly in the corrugations. Watertight joints shall remain uncovered for a period of time designated, and before being covered, tightness of the nuts shall be measured with a torque wrench. If the nut has tended to loosen its grip on the bolts or rods, the nut shall be retightened with a torque wrench and remain uncovered until a tight, permanent joint is assured.

3.5 DRAINAGE STRUCTURES

3.5.1 Manholes and Inlets

Construction shall be of reinforced concrete, plain concrete, brick, precast reinforced concrete, precast concrete segmental blocks,

prefabricated corrugated metal, or bituminous coated corrugated metal; complete with frames and covers or gratings; and with fixed galvanized steel ladders where indicated. Pipe studs and junction chambers of prefabricated corrugated metal manholes shall be fully bituminous-coated and paved when the connecting branch lines are so treated. Pipe connections to concrete manholes and inlets shall be made with flexible, watertight connectors.

3.5.2 Walls and Headwalls

Construction shall be as indicated.

3.6 STEEL LADDER INSTALLATION

Ladder shall be adequately anchored to the wall by means of steel inserts spaced not more than 6 feet vertically, and shall be installed to provide at least 6 inches of space between the wall and the rungs. The wall along the line of the ladder shall be vertical for its entire length.

3.7 BACKFILLING

3.7.1 Backfilling Pipe in Trenches

After the pipe has been properly bedded, selected material from excavation or borrow, at a moisture content that will facilitate compaction, shall be placed along both sides of pipe in layers not exceeding 6 inches in compacted depth. The backfill shall be brought up evenly on both sides of pipe for the full length of pipe. The fill shall be thoroughly compacted under the haunches of the pipe. Each layer shall be thoroughly compacted with mechanical tampers or rammers. This method of filling and compacting shall continue until the fill has reached an elevation equal to the midpoint (spring line) of RCP or has reached an elevation of at least 12 inches above the top of the pipe for flexible pipe. The remainder of the trench shall be backfilled and compacted by spreading and rolling or compacted by mechanical rammers or tampers in layers not exceeding [_____] inches. Tests for density shall be made as necessary to ensure conformance to the compaction requirements specified below. Where it is necessary, in the opinion of the Contracting Officer, that sheeting or portions of bracing used be left in place, the contract will be adjusted accordingly. Untreated sheeting shall not be left in place beneath structures or pavements.

3.7.2 Backfilling Pipe in Fill Sections

For pipe placed in fill sections, backfill material and the placement and compaction procedures shall be as specified below. The fill material shall be uniformly spread in layers longitudinally on both sides of the pipe, not exceeding 6 inches in compacted depth, and shall be compacted by rolling parallel with pipe or by mechanical tamping or ramming. Prior to commencing normal filling operations, the crown width of the fill at a height of 12 inches above the top of the pipe shall extend a distance of not less than twice the outside pipe diameter on each side of the pipe or 12 feet, whichever is less. After the backfill has reached at least 12 inches above the top of the pipe, the remainder of the fill shall be placed and thoroughly compacted in layers not exceeding [_____] inches. Use select granular material for this entire region of backfill for flexible pipe installations.

3.7.3 Movement of Construction Machinery

When compacting by rolling or operating heavy equipment parallel with the pipe, displacement of or injury to the pipe shall be avoided. Movement of construction machinery over a culvert or storm drain at any stage of construction shall be at the Contractor's risk. Any damaged pipe shall be repaired or replaced.

3.7.4 Compaction

3.7.4.1 General Requirements

Cohesionless materials include gravels, gravel-sand mixtures, sands, and gravelly sands. Cohesive materials include clayey and silty gravels, gravel-silt mixtures, clayey and silty sands, sand-clay mixtures, clays, silts, and very fine sands. When results of compaction tests for moisture-density relations are recorded on graphs, cohesionless soils will show straight lines or reverse-shaped moisture-density curves, and cohesive soils will show normal moisture-density curves.

3.7.4.2 Minimum Density

Backfill over and around the pipe and backfill around and adjacent to drainage structures shall be compacted at the approved moisture content to the following applicable minimum density, which will be determined as specified below.

a. Under airfield and heliport pavements, paved roads, streets, parking areas, and similar-use pavements including adjacent shoulder areas, the density shall be not less than 90 percent of maximum density for cohesive material and 95 percent of maximum density for cohesionless material, up to the elevation where requirements for pavement subgrade materials and compaction shall control.

b. Under unpaved or turfed traffic areas, density shall not be less than 90 percent of maximum density for cohesive material and 95 percent of maximum density for cohesionless material.

c. Under nontraffic areas, density shall be not less than that of the surrounding material.

3.7.5 Determination of Density

Testing is the responsibility of the Contractor and performed at no additional cost to the Government. Testing shall be performed by an approved commercial testing laboratory or by the Contractor subject to approval. Tests shall be performed in sufficient number to ensure that specified density is being obtained. Laboratory tests for moisture-density relations shall be made in accordance with ASTM D1557 except that mechanical tampers may be used provided the results are correlated with those obtained with the specified hand tamper. Field density tests shall be determined in accordance with ASTM D2167 or ASTM D6938. When ASTM D6938 is used, the calibration curves shall be checked and adjusted, if necessary, using the sand cone method as described in paragraph Calibration of the referenced publications. ASTM D6938 results in a wet unit weight of soil and ASTM D6938 shall be used to determine the moisture content of the soil. The calibration curves furnished with the moisture gauges shall be checked along with density calibration checks as described in ASTM D6938. Test results shall be furnished the Contracting Officer. The calibration

checks of both the density and moisture gauges shall be made at the beginning of a job on each different type of material encountered and at intervals as directed.

3.8 PIPELINE TESTING

3.8.1 Leakage Tests

Lines shall be tested for leakage by low pressure air or water testing or exfiltration tests, as appropriate. Low pressure air testing for vitrified clay pipes shall conform to ASTM C828. Low pressure air testing for concrete pipes shall conform to ASTM C924. Low pressure air testing for plastic pipe shall conform to ASTM F1417. Low pressure air testing procedures for other pipe materials shall use the pressures and testing times prescribed in ASTM C828 or ASTM C924, after consultation with the pipe manufacturer. Testing of individual joints for leakage by low pressure air or water shall conform to ASTM C1103. Prior to exfiltration tests, the trench shall be backfilled up to at least the lower half of the pipe. If required, sufficient additional backfill shall be placed to prevent pipe movement during testing, leaving the joints uncovered to permit inspection. Visible leaks encountered shall be corrected regardless of leakage test results. When the water table is 2 feet or more above the top of the pipe at the upper end of the pipeline section to be tested, infiltration shall be measured using a suitable weir or other device acceptable to the Contracting Officer. An exfiltration test shall be made by filling the line to be tested with water so that a head of at least 2 feet is provided above both the water table and the top of the pipe at the upper end of the pipeline to be tested. The filled line shall be allowed to stand until the pipe has reached its maximum absorption, but not less than 4 hours. After absorption, the head shall be reestablished. The amount of water required to maintain this water level during a 2-hour test period shall be measured. Leakage as measured by the exfiltration test shall not exceed [250 gallons per inch in diameter per mile of pipeline per day] [0.2 gallons per inch in diameter per 100 feet of pipeline per hour]. When leakage exceeds the maximum amount specified, satisfactory correction shall be made and retesting accomplished.

3.8.2 Deflection Testing

No sooner than 30 days after completion of installation and final backfill, an initial post installation inspection shall be accomplished. Clean or flush all lines prior to inspection. Perform a deflection test on entire length of installed flexible pipeline on completion of work adjacent to and over the pipeline, including leakage tests, backfilling, placement of fill, grading, paving, concreting, and any other superimposed loads. Deflection of pipe in the installed pipeline under external loads shall not exceed limits in paragraph PLACING PIPE above as percent of the average inside diameter of pipe. Determine whether the allowable deflection has been exceeded by use of a laser profiler or mandrel.

a. Laser Profiler Inspection: If deflection readings in excess of the allowable deflection of average inside diameter of pipe are obtained, remove pipe which has excessive deflection, and replace with new pipe. Initial post installation inspections of the pipe interior with laser profiling equipment shall utilize low barrel distortion video equipment for pipe sizes 48 inches or less. Use a camera with lighting suitable to allow a clear picture of the entire periphery of the pipe interior. Center the camera in the pipe both vertically and horizontally and be able to pan and tilt to a 90 degree angle with the axis of the pipe

rotating 360 degrees. Use equipment to move the camera through the pipe that will not obstruct the camera's view or interfere with proper documentation of the pipe's condition. The video image shall be clear, focused, and relatively free from roll static or other image distortion qualities that would prevent the reviewer from evaluating the condition of the pipe. For initial post installation inspections for pipe sizes larger than 48 inches, visual inspection shall be completed of the pipe interior.

b. Pull-Through Device Inspection: Pass the pull-through device through each run of pipe by pulling it by hand. If deflection readings in excess of the allowable deflection of average inside diameter of pipe are obtained, retest pipe by a run from the opposite direction. If retest continues to show excess allowable deflections of the average inside diameter of pipe, remove pipe which has excessive deflection, replace with new pipe, and completely retest in same manner and under same conditions. Pull-through device: The mandrel shall be rigid, nonadjustable having a minimum of 9 fins, including pulling rings at each end, engraved with the nominal pipe size and mandrel outside diameter. The mandrel shall be 5 percent less than the certified-actual pipe diameter for Plastic Pipe, 5 percent less than the certified-actual pipe diameter for Corrugated Steel and Aluminum Alloy, 3 percent less than the certified-actual pipe diameter for Concrete-Lined Corrugated Steel and Ductile Iron Culvert provided by manufacturer. When mandrels are utilized to verify deflection of flexible pipe products, the Government will verify the mandrel OD through the use of proving rings that are manufactured with an opening that is certified to be as shown above.

c. Deflection measuring device: Shall be approved by the Contracting Officer prior to use.

d. Warranty period test: Pipe found to have a deflection of greater than allowable deflection in paragraph PLACING PIPE above, just prior to end of one-year warranty period shall be replaced with new pipe and tested as specified for leakage and deflection. Inspect 100 percent of all pipe systems under the travel lanes, including curb and gutter. Random inspections of the remaining pipe system outside of the travel lanes shall represent at least 10 percent of the total pipe footage of each pipe size. Inspections shall be made, depending on the pipe size, with video camera or visual observations. In addition, for flexible pipe installations, perform deflection testing on 100 percent of all pipes under the travel lanes, including curb and gutter, with either a laser profiler or 9-fin mandrel. For flexible pipe, random deflection inspections of the pipe system outside of the travel lanes shall represent at least 10 percent of the total pipe footage of each pipe size. When mandrels are utilized to verify deflection of flexible pipe products during the final post installation inspection, the Government will verify the mandrel OD through the use of proving rings.

3.8.3 Post-Installation Inspection

One hundred percent of all reinforced concrete pipe installations shall be checked for joint separations, soil migration through the joint, cracks greater than 0.01 inches, settlement and alignment. One hundred percent of all flexible pipes (HDPE, PVC, CMP, PP) shall be checked for rips, tears, joint separations, soil migration through the joint, cracks, localized bucking, bulges, settlement and alignment.

a. Replace pipes having cracks greater than 0.1 inches in width or deflection greater than 5 percent deflection. An engineer shall evaluate all pipes with cracks greater than 0.01 inches but less than 0.10 inches to determine if any remediation or repair is required. RCP with crack width less than 0.10 inches and located in a non-corrosive environment (pH 5.5) are generally acceptable. Repair or replace any pipe with crack exhibiting displacement across the crack, exhibiting bulges, creases, tears, spalls, or delamination.

b. Reports: The deflection results and finial post installation inspection report shall include: a copy of all video taken, pipe location identification, equipment used for inspection, inspector name, deviation from design, grade, deviation from line, deflection and deformation of flexible pipe systems, inspector notes, condition of joints, condition of pipe wall (e.g. distress, cracking, wall damage dents, bulges, creases, tears, holes, etc.).

3.9 FIELD PAINTING

[After installation, clean cast-iron frames, covers, gratings, and steps not buried in masonry or concrete to bare metal of mortar, rust, grease, dirt, and other deleterious materials and apply a coat of bituminous paint.] [After installation, clean steel covers and steel or concrete frames not buried in masonry or concrete to bare metal of mortar, dirt, grease, and other deleterious materials. Apply a coat of primer, [_____], to a minimum dry film thickness of [_____] mil; and apply a top coat, [_____] to a minimum dry film thickness of [_____] mils, color optional. Painting shall conform to Section 09 90 00 PAINTS AND COATINGS.] Do not paint surfaces subject to abrasion.

-- End of Section --

This page intentionally blank

TABLE OF CONTENTS

Chapter/Paragraph **Page No.**

CHAPTER 1 GENERAL DESCRIPTION 1

1.1 INTRODUCTION.. 1
1.2 BACKGROUND…..... 1
1.3 GENERAL DESIGN CRITERIA 2
1.4 OPERATIONAL CONSIDERATIONS 2
1.5 REFERENCES…. 2

CHAPTER 2 GEOTECHNICAL DESIGN 6

2.1. GEOTECHNICAL DESIGN INTENT 6
2.2 GEOLOGY AND SUBSURFACE CONDITIONS 6
2.2.1 Geologic Setting 6
2.2.2 Site Geology 6
2.2.3 Soil Conditions 7
2.2.4 Subsurface Explorations 8
2.2.5 Laboratory Testing 8
2.3 SLOPE STABILITY ANALYSIS 8
2.3.1 Slope Overview 8
2.3.2 Stability Criteria 9
2.3.3 Stability Analysis 9
2.3.4 Slope Stability Recommendations 10
2.3.5 Groundwater Conditions 10
2.3.6 Seismic Considerations 10
2.4 SLOPE CHANNEL PROTECTION 11
2.5 CONSTRUCTION CONSIDERATIONS 12
2.5.1 Rock Excavation 12
2.5.2 Disposal of Excavated Material 12
2.6 LIMITATIONS OF THE GEOTECHNICAL REPORT 12

CHAPTER 3 CIVIL DESIGN 13

3.1 DESIGN INTENT. 13
3.2 FEATURE DESCRIPTION 13
3.2.1 Access road grading 13
3.2.2 Slope grading 13
3.2.3 Storm drainage improvements 13
3.2.4 Structure removal 14
3.3 CLEARING AND GRADING 14
3.4 MATERIALS…… 14

CHAPTER 4 REAL ESTATE 15

4.1 GENERAL DESCRIPTION 15

CHAPTER 5 ENVIRONMENTAL AND CULTURAL DOCUMENTATION 16

5.1 ENVIRONMENTAL COMPLIANCE 16
5.2 FEDERAL STATUTES 16
5.2.1 National Environmental Policy Act (NEPA) 16
5.2.2 Clean Air Act 17
5.2.3 Federal Water Pollution Control Act 17
5.2.4 Coastal Zone Management Act 18
5.2.5 Endangered Species Act 18
5.2.6 Magnuson-Stevens Fishery Conservation and Management Act 19
5.2.7 National Historic Preservation Act 19
5.2.8 Native American Graves Protection and Repatriation Act 20
5.2.9 Migratory Bird Treaty Act 20
5.3 EXECUTIVE ORDERS 21
5.3.1 Executive Order 11990, Protection of Wetlands 21
5.3.2 Executive Order 12898, Federal Actions to Address Environmental Justice in Minority Populations and Low-Income Populations 21
5.3.3 Executive Order 11988, Floodplain Management Guidelines 21
5.4 TRIBAL TREATY RIGHTS 22

CHAPTER 6 TECHNICAL REVIEW 23

6.1 DISTRICT QUALITY CONTROL REVIEW (DQC) – 35% AND 95% 23
6.2 BIDDABILITY, CONSTRUCTIBILITY, OPERABILITY AND ENVIRONMENTAL (BCOE) REVIEW - TBD 23

CHAPTER 7 OUTLINE SPECS 24

DIVISION 1 FRONTS…. 24
DIVISION 3 CONCRETE 24
DIVISION 31 EARTHWORK 25
DIVISION 32 EXTERIOR IMPROVEMENT 25
DIVISION 33 UTILITIES 25

FIGURES

FIGURE 1.1. VICINITY AND AREA MAPS 4
FIGURE 1.2. TOPOGRAPHIC LOCATION, HOWARD A. HANSON DAM PROJECT 5

TABLES

TABLE 5.1. STATUS OF PROJECT WITH APPLICABLE LAWS AND STATUTES 16

APPENDICES

Appendix A	Geotechnical Design Calculations
Appendix B	Civil Design Calculations

PLATES

(DRAWING SHEETS ARE BOUND SEPARATELY)

PLATE NO.	TITLE
G-001	COVER SHEET
G-002	GENERAL NOTES, ABBREVIATIONS, AND LEGEND
G-003	SITE ACCESS AND HAUL ROUTE
C-101	SITE PLAN
C-201	ROAD PLAN AND PROFILE
C-202	DRAINAGE PLAN AND PROFILE
C-203	LOWER ROAD PLAN AND PROFILE
C-301	SECTIONS 1 (STA. 0+00 TO 2+00)
C-302	SECTIONS 2 (STA. 2+25 TO 4+00)
C-303	SECTIONS 3 (STA. 4+25 TO 5+75)
C-304	SECTIONS 4 (STA. 6+00 TO 6+97)
C-401	ENLARGED DRAINAGE PLAN
C-501	MISC. DETAILS

This page intentionally blank.

Chapter 1 General Description

1.1 Introduction

Howard A. Hanson Dam (HHD) is located approximately 45 miles southeast of Seattle, Washington. The dam consists of an embankment section across a mountain valley with a grated intake tower, outlet works and spillway on the left abutment. The existing access road to the spillway on the left bank downstream of the dam is in poor condition and is regularly damaged due to poor hillside drainage and deteriorating rock resulting in an unstable slope condition. Grading and/or removal of unstable rock faces and improvements to the existing open conveyance drainage system are required to insure continued operations, safe access to the spillway and reduced road maintenance.

1.2 Background

There are currently three access roads on the left bank downstream of the dam. The lower road leads to the left side of the stilling basin, the middle road leads to the spillway, and the upper road leads to an abandoned seismic monitoring station. The lower road is currently stable requiring minimal maintenance. The upper road is no longer in use and has been undercut by surface erosion and sloughing of the unstable slopes below. The middle access road requires constant maintenance and regularly restricts access to the spillway. The two primary causes of the middle access road maintenance are poor drainage and unstable deteriorating rocks slopes.

The existing drainage system serves approximately 160 acres upslope from the project area. Drainage from this upstream basin is conveyed through the project area via a series of open and closed conveyances. Drainage passes under the Burlington Northern railroad through a 50 inch diameter corrugated metal pipe culvert then under the left abutment main access road through two 42 inch diameter, riveted steel culverts. It continues downslope via a man-made “V” ditch constructed of large rock placed on the downslope side. This ditch is three to five feet deep and heavily vegetated. Two 24 inch diameter culverts convey the drainage under the upper access road and discharge onto an unprotected slope. These culverts are severely undercut on the downstream end and the outflow drops approximately 30 feet onto a heavily eroded slope. The outflow from these culverts continuously erodes the hillside and plugs the two 24 inch diameter culverts below which cross under the middle access road causing the culverts to washout and leave the road impassable. The culverts under the middle road are also severely undercut on the downstream end and the outflow drops approximately 20 feet onto the hillside causing erosion of the lower slope. All of the above mentioned culverts are generally in good condition aside from being undercut.

In addition to the drainage issues there are several unstable slopes between the access roads. A large gully has been eroded between the upper road and the middle road. The gully is composed of over steepened slope and unstable loose material. A similar gully is starting to form between the middle and lower roads as well. Adjacent to the upper gully is a weathered and exposed rock outcropping. This outcropping regularly sloughs rock debris onto the middle road making it impassable.

1.3 General Design Criteria

The following represent over-arching project objectives:

- Provide a safe and stable access road to the Spillway while reducing maintenance needs and access restrictions to the middle access road.
- Provide a stormwater system that is correctly sized to convey all drainage down the hillside in a controlled manner to prevent further erosion of the hillside.
- Stabilize the over steepened and unstable portions of the hillside to prevent further erosion of the hillside.

1.4 Operational Considerations

From a safety and maintenance standpoint, the middle and lower roads need to remain drivable to provide access to the spillway and the stilling basin. Since the seismograph station has been abandoned there is no longer a need for the upper access road and it will be abandoned. Stabilizing the hillside will also reduce maintenance needs from the operations staff.

1.5 References

1. Battelle. November 2009.
2. Rouse, (1949) Engineering Hydraulics
3. International Building Code, 2009
4. Lindeburg, (1994) Civil Engineering Reference Manual. Professional Publications, Inc.
5. Jones, Horton, Ryffel (2004) Machinery's Handbook, Industrial Press, Inc.
6. USACE (a). February 2009. Post-Flood Pool of Record Data Report. Howard A. Hanson Dam, Washington. Seattle District.
7. USACE September 2008. Safety And Health Requirements Manual

8. EM 385-1-1, Safety and Health Requirements Manual

9. USACE September 2010. Draft Dam Safety Modification Report

10. Kliche, Rock Slope Stability, 1999.

11. Central Federal Lands Highway Division (CFLHD), Rock Slope Stabilization.

12. EM 1110-2-1902, Slope Stability.

13. EM 1110-1-2908 Rock Foundations

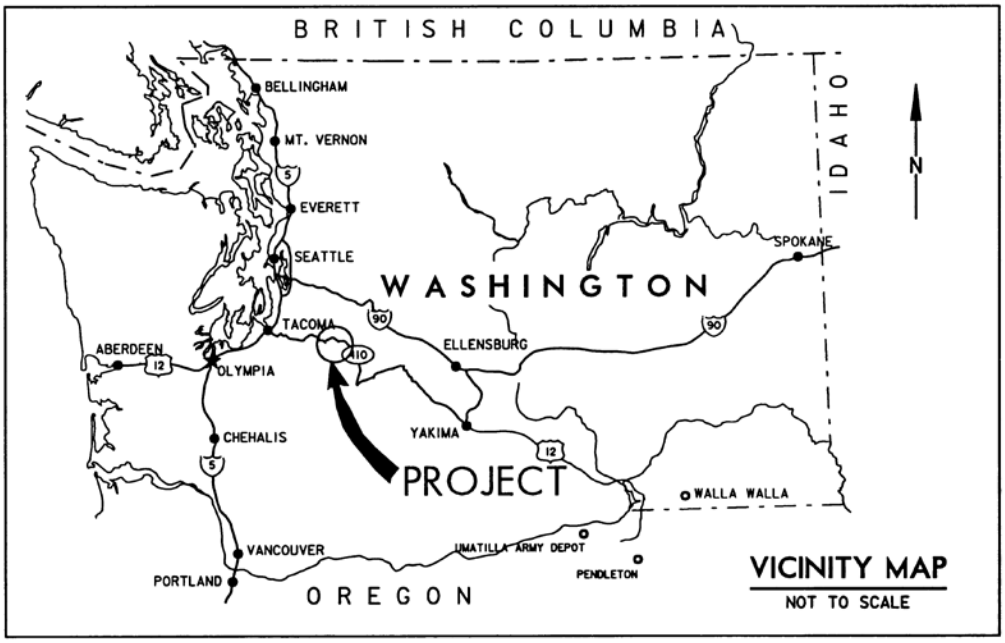

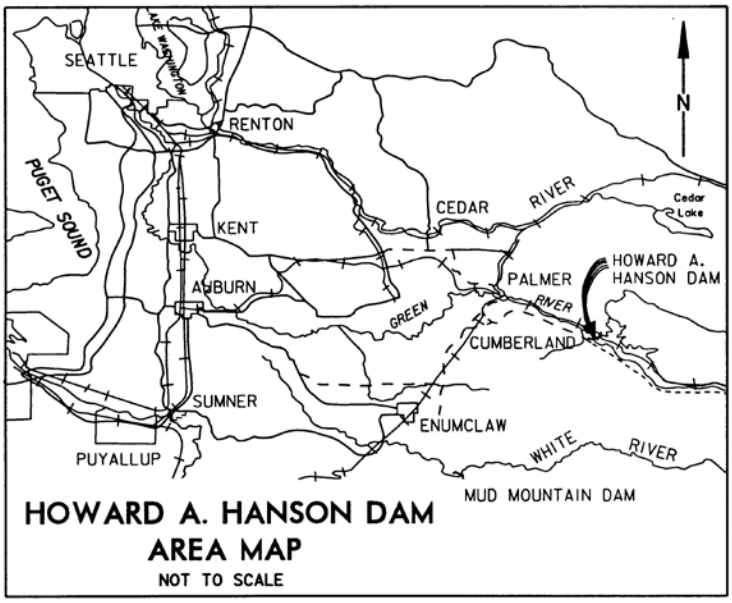

Figure 1.1. Vicinity and Area Maps

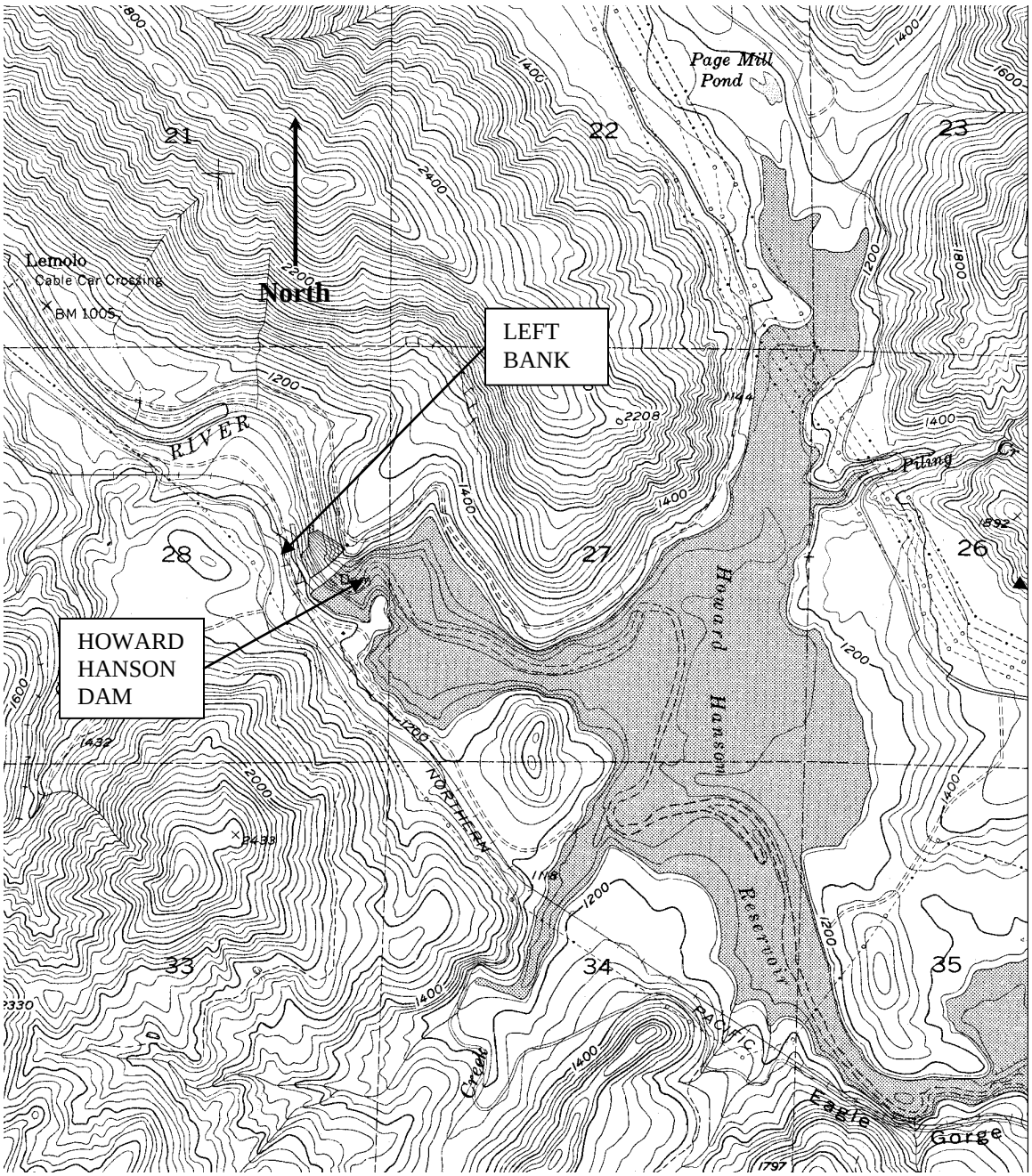

Figure 1.2. Topographic Location, Howard A. Hanson Dam Project

Chapter 2 Geotechnical Design

2.1. Geotechnical Design Intent

The goal of the HHD Left Bank Drainage project is to make the spillway access road safe for use. Due to the deterioration of the slope, there is a significant rockfall hazard and the existing culverts have been undermined to the point that there is the potential for them to fall as well. This project aims to widen the road, improve the hillside drainage, and stabilize the slope, thus increasing the overall safety of the spillway access road for project personnel.

2.2 Geology and Subsurface Conditions

2.2.1 Geologic Setting

Howard A. Hanson Dam is located on the Green River in western Washington. The dam spans a narrow rock canyon located 5 miles inside the western Cascade margin. To the east, the Cascade Range rises sharply to elevations over 7,000 feet. The Cascades are a complex mountain system composed of sedimentary, metamorphic, and intrusive and extrusive igneous rocks. The ancestral Green River was tributary to the Cedar River drainage prior to the glaciation of the Puget Sound Lowland. Before the last glacial event the river flowed out the North Fork Valley to the Cedar. During the Pleistocene, glacial ice extended eastward up into the alpine valley headwaters. The ice and subsequent moraines diverted the proto-Green River from its North Fork Valley exit to its present course where it emerges from the Cascade Mountain front south of the North Fork Valley. The diverted river flowed on a bedrock floor at elevation 1,000 feet in the river gorge. This gorge is presently buried north of the damsite. The nearest (southwest) rim of the ancestral valley is located several hundred feet northeast of the right abutment of Howard Hanson Dam.

During subsequent interglacial periods, the Green River cut its channel approximately 150 feet deeper resulting in oversteepened side slopes and collapse of the eastern valley side. Several episodes of deposition, erosion, and landsliding may have followed. The present gorge beneath the dam was cut as a result of river blockage by the last massive slide off the northeast valley wall. Today this landslide is a major landform forming part of the right abutment of Howard Hanson Dam.

2.2.2 Site Geology

The Howard Hanson Dam project lies within a series of Tertiary age volcanic rocks. Locally, these rocks are known as the Eagle Gorge Andesite and regionally they correlate with the Fifes Peak formation of early Miocene age. Regional dip of the bedrock is 35° southeast. Bedrock at the project site is composed of andesitic and

basaltic flows, tuffs, and breccias with associated basic and acidic dikes and sills. The entire assemblage is so faulted, sheared and hydrothermally altered that it has few mappable structures and stratigraphic patterns (U.S. Army Corps of Engineers, 1963). The Green River channel beneath the dam has been eroded in bedrock to approximately elevation 1,000 feet. The Howard Hanson Dam foundation report lists five distinct rock types found at the dam. A brief description of the rock types are as follows:

- *Basalt*: Hard to moderately hard, dense, blocky, black, generally not badly affected by hydrothermal alteration or weathering, moderately fractured, occurring in the form of thin flows, dikes and sills.

- *Andesite*: Moderately hard, dense, dark green to dark gray, irregular to blocky fractures, sometimes massive, fine-grained to porphyritic, minor hydrothermal alteration.

- *Basalt Pyroclastics (Tuff):* Moderately hard to soft, with medium grained, dark gray tuffaceous matrix with fragments of hard dense basalt. Highly susceptible to hydrothermal alteration and weathering. This rock has a general agglomeratic texture with seams of pure tuff.

- *Andesite Pyroclastics (Tuff):* Soft, light gray, fine-grained matrix with moderately hard fragments, granular to agglomeratic texture. Generally highly altered by hydrothermal action, the rock deteriorates readily upon exposure to the atmosphere.

- *Felsite*: Hard, dense, light gray, occurs as dikes and sills.

The left abutment contains all of the above rock types. The bedrock is hard to moderately hard, except in the hydrothermally altered zones where the rock is predominantly soft. Bedrock is moderately to intensely fractured. Several fault and shear zones trending east-west and southeast-northwest were mapped in the canyon walls and inside the diversion tunnel during project construction. The overburden overlying left abutment rock is composed of silty, sandy gravel slopewash.

The left bank bedrock in the subject area is comprised of fine to medium grained porphyritic andesite. In several locations, the andesite is highly altered and has severely eroded over the years since the original rock cut for the emergency spillway was completed. The gully and rock outcropping that make up the area around the drainage alignment is comprised of the highly altered andesite and has continually raveled over the recent years. Several large boulders (grater than a cubic yard) have fallen from this rock outcropping onto the access roads below.

2.2.3 Soil Conditions

In general, soil conditions within the project area are consistent with the geologic history of the area. Based on site reconnaissance and review of information from previous geotechnical studies it was concluded that the soils present on the site consist mostly of

sands and gravels. Native soils are derived mostly from andesite which has weathered and eroded overtime. Fill and imported material is mostly crushed gravel used for the existing access roads.

2.2.4 Subsurface Explorations

No subsurface explorations were conducted for this project.

Prior to construction of the dam exploratory drilling for the damsite was completed. Several of the explorations were near the spillway and were reviewed for this project. Two borings for the spillway chute, D-23 and D-27, were completed in January 1956 and March 1956, respectively. The borings were completed using a core and cable tool. Boring D-23 taken in the spillway chute prior to excavation shows soft weather rock in the upper 16 feet, broken rock fragments and boulders from 16 to 67 feet, and solid, blue-green andesite from 67 feet to the bottom of the hole. Boring D-27 downstream of the spillway chute (the closest boring to the project location) shows sandy, broken rock in the upper 14.5 feet and andesite from 14.5 feet to the bottom of the hole.

2.2.5 Laboratory Testing

No laboratory testing was conducted for this project.

2.3 Slope Stability Analysis

The following sections present the analyses criteria, design assumptions, and the geotechnical recommendations for the design of the slope.

2.3.1 Slope Overview

The focus of the stability analysis is the highly altered andesite rock outcropping to the north of the drainage alignment. The rock slope above the spillway access road is a constant rockfall hazard due to the instability and deterioration of the rock and is a constant safety and maintenance concern for the project. On a regular basis boulders and rock fragments become loosened from the slope and fall onto the spillway access road, occasionally rolling downhill on the stilling basin access road or river.

The majority of the observed failures are very shallow, typically consisting of near surface material. Failures are likely do to discontinuities in the rock allowing for rock fragments and boulders to become dislodged. In addition, the rock is highly weathered behaving similar to a soil at times. Therefore due to the over-steepened slope geometry there is a potential for slope failures due to the reduced shear strength of the weathered rock slope.

2.3.2 Stability Criteria

EM 1110-2-1902 for slope stability recommends that the factory of safety for slopes other than those of dams should be selected consistent with the uncertainty involved in the parameters such as shear strength and pore water pressures that affect the calculated value of factor of safety and the consequences of failure. When the uncertainty and the consequences of failure are both small, it is acceptable to use small factors of safety on the order of 1.3 or even smaller in some circumstances. When the uncertainties or the consequences of failure increase, larger factors of safety are necessary. Large uncertainties coupled with large consequences of failure represent an unacceptable condition, no matter what the calculated value of the factor of safety.

The parameters involved for this project have a high uncertainty. The material properties, pore water pressures, and material layer thicknesses are all unknowns and must be assumed for the analysis. However, the consequences of failure are low. If a slope failure occurs there is a small likely hood of life loss. Access to the project is limited due to the dam and the spillway access road is not in heavy use. Material does have the potential to fall into the Green River, however estimates do not indicate there is enough material associated with a slope failure at this location to completely block the Green River.

2.3.3 Stability Analysis

The slope consists of rock which has been altered due to significant weathering and erosion. Due to the deterioration of the rock the material in the slope either can be treated as a soft rock or a strong soil. Since there are many unknowns and to be conservative the highly altered rock was modeled as a strong soil using Mohr-Coulomb (c and ϕ) rather than a weak rock using Hoek-Brown (GSI, σ_{ci}, and m_i).

Contours from the 2010 Lidar survey were used to select the most critical section of the slope for analysis. Material properties were back-calculated from the existing conditions assuming a factor of safety close to 0.9. A FS<1 was selected with the assumption that the slope is in a constant state of failure for near surface semi-planar failures. GeoStudio 2012 (SLOPE/W) was used to run the slope stability analysis.

Parameters of 145 pcf for unit weight and 34° for phi were selected for the material properties based on the back-calculation. A variety of different slopes configurations were examined and a geometry laying back the slope with a midway catch bench was selected because it provided the highest factor of safety (FS=1.5). See appendix A for stability analysis.

A deeper stability failure was not analyzed because it would involve the competent underlying andesite which has historically shown to be stable. Therefore only the shallow surficial failure was analyzed.

2.3.4 Slope Stability Recommendations

Results of the stability analysis are to excavate the slope to a more stable condition by removing the weathered and weak rock. The proposed configuration includes construction of a catch bench midway on the slope and laying back the slope to make it more gradual. The addition of the catch bench aside from increasing the stability of the slope makes construction easier and provides a platform to rockfall to collect on instead of the spillway access road.

Other methods: The use of rock bolts/anchors is not a recommended option because it is a less suitable method for slopes comprised of small blocks and weathered rock. Shot-crete could be used to protect the slope, however due to the highly erodible nature of the rock; it is likely the rock would erode behind the shot-crete. Rock nets could be used to contain small rock fragments from falling, however they would be insufficient for the larger rocks. Ideally once the slope is reconfigured rock nets will not be necessary.

2.3.5 Groundwater Conditions

The groundwater conditions at this location are unknown. There are no piezometers located near the project on the left bank and no borings were conducted for this project. The 1956 borings in the rock slope vicinity do not indicate the groundwater level on the logs. Water has been observed recently to infiltrate the slope due to rainfall and seepage from the V-ditch to the east of the drainage alignment and may cause a perched water table.

The groundwater level is assumed to be below the slope for analysis. There is the potential for a perched water condition due to rainfall and seepage, however, any rainfall will be a small amount of water and the ditch is to be lined with shotcrete in the future reducing the volume of seepage water. In addition, the seepage into the hillside has been observed to the east of the drainage alignment and the analysis is looking at the slope to the west of the drainage alignment.

2.3.6 Seismic Considerations

The consequences associated with failure are low. Seismic loadings were not included in the analysis.

The design ground motion at the project site was evaluated using the Probabilistic Seismic Hazard Analysis (PHSA) which incorporates the frequency of occurrence of earthquakes of different magnitudes on various seismic sources, the uncertainty of the earthquake locations on the sources, and the ground motion prediction, including its uncertainty. The most recent ground motion prediction equations published in the USGS' Interactive Desaggreation (2008) online tool was used. Results may be viewed in Appendix A.

Liquefaction is an earthquake hazard associated with sites where the subsurface typically consists of loose, saturated, cohesionless (granular) soils. The liquefaction potential of a soil primarily depends on its gradation and density, and the intensity and duration of ground shaking. Relatively clean, sandy soil with low fines content is known to be potentially liquefiable depending upon its density (Seed and Idriss, 1971). The weathered rock encountered in the project area is not subject to liquefaction.

Weather rock, rock, and compacted gravels are not susceptible to liquefaction and are therefore also not susceptible to earthquake-induced densification which would cause ground settlement or subsidence.

2.4 Slope Channel Protection

In order to prevent additional weathering and erosion of the hillside the existing drainage alignment needs to be protected. Options to protect the slope included changing the alignment of the drainage path, containing the water in a pipeline, shot-creting the existing alignment, lining the alignment with a geomembrane, and armoring through the use of riprap.

Original concept drawings planned to move the alignment of the drainage path and contain it in a pipeline. Upon further discussions with the Mechanical the pipeline concept was abandon due to construction issues and cost. Initial estimates were for a 3 foot diameter pipe which would need to be anchored to the slope. Significant thermal expansion is anticipated with a pipe that size and the competency of the rock to be anchored to are unknown.

Geomembranes, though good for reducing permeability, do not have the strength required to withstand the rock and high flows. There is a high likely hood that the geomembrane would tear or be punctured by the rock present.

Lining the slope channel with concrete or shot-crete would provide sufficient erosion protection, however would increase the velocities of the water while on the slope. The slopes are too steep to place concrete, shot-crete is a viable placement method; however it would be expensive to treat the entire slope.

The preferred method at this time is to armor the slope. Armoring the slope will protect the existing slope and increase the roughness to dissipate energy. The proposed armoring will need to be large enough to not move under large flows and have a filter to protect the slope. Proposed design is to use a 3 foot thick layer of Class V riprap over a 1 foot thick blanket of quarry spalls (4” x 8”). The spalls will provide a filter and transition between the riprap and existing slope.

2.5 Construction Considerations

General construction considerations for the construction of the spillway access road, drainage improvements, and slope stabilization are presented below. The project is designed to be completed in one construction season during a period of dry weather to reduce the amount of runoff on the site. Work at the site is only possible when water is not following through the culverts, typically from June to late September. A temporary drainage alignment should be considered to construct the project in dry conditions.

2.5.1 Rock Excavation

The excavation of the deteriorated rock will likely be done through the use of mechanical scaling. Mechanical scaling is used to remove weak/loose rock via equipment such as hydraulic hammers, long-reach excavators, and cranes. For larger rocks, pneumatic pillows or splitters can be used to dislodge the rock for removal. It is anticipated that excavators may be used to remove a majority of the rock. Excavators with a reach of 40-50 feet and hydraulic hammer attachments may be required to achieve the design configuration. The exact extent of weathering and deterioration is unknown. Blasting is not considered to be a preferred construction method at this time, due to the vicinity to the dam. The catch bench and 2H:1V slope should allow for excavators to drive the slope to allow for constructability.

2.5.2 Disposal of Excavated Material

The plan is to dispose of the excavated material at various locations near the project location. Ideally material will be reused or placed on site instead of being hauled from offsite. There is potential to dispose of excess material between the middle and lower access road and on the sides of the riprap protection in the drainage alignment.

2.6 Limitations of the Geotechnical Report

The recommendations in this report are based solely on visual observations of the site, literature review, and familiarity with the general geological conditions in the area. No subsurface explorations were conducted at the project location therefore site conditions will likely differ from those assumed in the report. The Contractor should immediately contact the USACE geotechnical designers if subsurface conditions are significantly different from those assumed in this report.

Chapter 3 Civil Design

3.1 Design Intent

The goal of this design is to provide safe access to the spillway and to minimize ongoing maintenance to the three access roads. Grading of the access roads and adjacent unstable slopes and improvements to existing drainage systems will be required.

3.2 Feature Description

The major civil features of this project will be grading of the middle and lower access roads, grading of unstable slopes, improvements to existing storm drainage system, and removal of an abandoned seismic monitoring station.

3.2.1 Access road grading

The middle access road will be graded to reduce centerline grades to 10% or less and widened to 16’ to accommodate maintenance vehicles. The typical road section will be 16’ wide, sloped towards the upslope (west) side with a shallow roadside ditch. The lower road alignment will be modified to accommodate the raising of the middle road. The upper access road will be abandoned after removal of the seismic monitoring building and regarding of portions of the unstable slopes.

3.2.2 Slope grading

Unstable slopes between the middle and upper roads will be graded to 1.3-1.5 horizontal to 1 vertical to minimize further sloughing of the slopes. A 10’ debris bench will be constructed above one portion of the middle road to provide a safe collection area for debris thereby reducing the amount that falls onto the middle road.

3.2.3 Storm drainage improvements

An existing open “V” ditch is located between the left abutment main access road and the upper access road. This man-made ditch was constructed using large spalls for a downslope embankment. This construction allows seepage through the downslope edge which is suspected of contributing to slope failures below the middle road. The existing ditch will be cleared of vegetation and shot-creted to prevent further seepage. The rough channel will be preserved and check dams placed at 50’ intervals to reduce flow velocity and erosion potential. Steeper portions of the drainage channel downstream of the existing culverts will be armored with rock to protect the slopes from further erosion.

The existing 2-24inch steel culverts passing under the upper and middle roads are to be replaced with new 42-inch CMP culverts.

A V-ditch with 2:1 side slopes will be constructed on the uphill side of the middle road to collect drainage from the hillside and convey it back to the main drainage channel. A trench drain will be installed at the downstream end of the spillway to collect seepage from the spillway and will outfall into the beginning of the roadside ditch. A 12" culvert will be placed at the intersection of the middle and lower roads to convey drainage under the middle road.

3.2.4 Structure removal

The Seismic monitoring station at the end of the upper road will be removed, allowing the upper road to be abandoned. The building will be disposed of offsite. In addition, the core samples boxes at the start of the upper road may be removed as an option in this project.

3.3 Clearing and Grading

Limited clearing will be needed to layback the unstable slopes and to realign the lower road. Clearing should be minimized as much as possible to prevent further destabilization of the hillside. Significant grading will be required for several features of the design. Laying back the unstable slopes will require cutting of the hillside. Raising the intersection of the middle and lower roads and widening the middle road will require both cut and fill work.

3.4 Materials

To the maximum extent possible the excavated spoils will be reused for all fill material. However, the road surface will be an imported base course material. It is expected that approximately 5,000 cubic yards of material will need to be disposed of off-site.

Chapter 4 Real Estate

4.1 General Description

The left bank drainage project easement areas are the slopes downstream of the spillway and the three access roads to the abandon seismic monitoring station, spillway, and stilling basin. HHD personnel have informed the PDT that the site lies entirely on property owned by the Army Corps of Engineers. There is a potential that additional land outside of the project area may be needed to dispose of excess excavated materials.

Chapter 5 Environmental and Cultural Documentation

5.1 Environmental Compliance

Table 7-1 lists the current status of the Howard Hanson Dam (HHD) Left Bank Drainage project with respect to required environmental laws and executive orders. At this point in the design, compliance with all environmental laws and executive orders is completed except for a National Pollutant Discharge Elimination System (NPDES) Permit under the Clean Water Act. Status is further detailed in the sections below.

Table 5.1. Status of Project with Applicable Laws and Statutes

Federal Statutes	Compliance Status
National Environmental Policy Act of 1969, as amended	Completed
Clean Air Act of 1977, as amended	Completed
Clean Water Act of 1977, as amended	Completed except for a NPDES Permit
Coastal Zone Management Act	Completed
Endangered Species Act of 1973, as amended	Completed
Magnuson-Stevens Fishery Conservation and Management Act	Completed
National Historic Preservation Act of 1966, as amended	Completed
Archaeological and Historic Preservation Act	Completed
Native American Graves Protection and Repatriation Act	Completed
Executive Orders (E.O.)	**Compliance Status**
Floodplain Management Guidelines (E.O. 11988)	Completed
Protection of Wetlands (E.O. 11990)	Completed
Environmental Justice (E.O. 12898)	Completed

5.2 Federal Statutes

5.2.1 National Environmental Policy Act (NEPA)

The National Environmental Policy Act (NEPA) (42 U.S.C. 4321 et seq.) requires that Federal agencies consider the environmental effects of their actions. An Environmental Assessment (EA) is typically prepared to evaluate environmental effects of the action and determine whether the project will have a ‘significant effect on the quality of the human environment’. If the action is determined to have a significant

effect, NEPA requires that an Environmental Impact Statement (EIS) be prepared. However, if there are no extraordinary or extenuating conditions that exist which will require an EA or EIS, a Record of Environmental Consideration (REC) can be prepared if the proposed project is in accordance with categorical exclusions under ER 200-2-2, consistent with CEQ definitions under 40 CFR 1508.4.

A final REC was completed on August 8, 2014 in accordance with Paragraph 9(a), ER 200-2-2, consistent with CEQ definitions under 40 CFR 1508.4. The proposed action does not have significant effects on the quality of the human environment when considered individually and cumulatively and is categorically excluded from NEPA documentation. This satisfies documentation requirements underneath NEPA.

5.2.2 Clean Air Act

The Clean Air Act requires states to develop plans, called State Implementation Plans (SIP), for eliminating or reducing the severity and number of violations of National Ambient Air Quality Standards (NAAQS) while achieving expeditious attainment of the NAAQS. The Act requires Federal actions to conform to the appropriate SIP. An action that conforms with a SIP is defined as an action that will not: (1) cause or contribute to any new violation of any standard in any area; (2) increase the frequency or severity of any existing violation of any standard in any area; or (3) delay timely attainment of any standard or any required interim emission reductions or other milestones in any area. The proposed actions will have negligible effects on air quality. The project is exempted from the conformity requirements of the Clean Air Act because actions taken to repair and maintain existing facilities are specifically excluded from the CAA conformity requirements where the action, as here, would result in an increase in emissions that is clearly de minimis (40 CFR § 93.153(c)(2)(iv)).

5.2.3 Federal Water Pollution Control Act

The Federal Water Pollution Control Act (33 U.S.C. 1251 et seq.) is more commonly referred to as the Clean Water Act (CWA). This act is the primary legislative vehicle for Federal water pollution control programs and the basic structure for regulating discharges of pollutants into waters of the United States. The CWA was established to “restore and maintain the chemical, physical, and biological integrity of the nation’s waters.” The CWA sets goals to eliminate discharges of pollutants into navigable waters, protect fish and wildlife, and prohibit the discharge of toxic pollutants in quantities that could adversely affect the environment.

Under Section 404 of the Clean Water Act (CWA), a Department of the Army permit is required for the discharge of dredged or fill material into waters of the United States

including wetlands. Under Section 401 of the CWA, State Water Quality Certification is required for discharges that may impact water quality. The certification ensures that the discharge will comply with the applicable provisions of Sections 301, 302, 303, 306 and 307 of the CWA. The proposed action will not result in a discharge of fill material into waters of the United States and therefore does not require a Section 404 permit or Section 401 water quality certification.

Section 402(p) of the CWA provides that stormwater discharges associated with industrial activity that discharge to waters of the United States must be authorized by an National Pollutant Discharge Elimination System (NPDES) permit when construction footprints exceed one acre. The term "discharge" when used in the context of the NPDES program means the discharge of pollutants (40 CFR §122.2). The project does involve construction and potential for stormwater discharges. A stormwater permit or coverage under the EPA construction general permit will be necessary depending on the size of the final vertical drains installation footprint. The Corps anticipates applying for coverage under the construction general permit.

5.2.4 Coastal Zone Management Act

The Coastal Zone Management Act of 1972 (16 USCA 1451-1465), Sec. 307(c)(1)(A), as amended, requires Federal agencies to carry out their activities in a manner that is consistent to the maximum extent practicable with the enforceable policies of a state's approved Coastal Zone Management (CZM) Program. The Shoreline Management Act of 1971 (SMA) (RCW 90.58) is the core authority of Washington's CZM Program. Primary responsibility for implementation of the SMA is assigned to local governments. In the case of Howard Hanson Dam and the Green River, the local jurisdiction is King County but the proposed project takes occurs on land owned by the Federal government and is therefore outside the coastal zone (see 923.33(a)). The project is not a "development project," and since it is outside the coastal zone with no reasonably foreseeable effects, no consistency determination or negative determination is required, under 930.33(a)(2). No further documentation under CZM is required.

5.2.5 Endangered Species Act

The ESA (16 U.S.C. 1531-1544), amended in 1988, establishes a national program for the conservation of threatened and endangered species of fish, wildlife, and plants and the habitat upon which they depend. Section 7(a) of the ESA requires that Federal agencies consult with the U.S. Fish and Wildlife Service and the National Marine Fisheries Service (NMFS), as appropriate, to ensure that their actions are not likely to

jeopardize the continued existence of endangered or threatened species or to adversely modify or destroy their critical habitats.

USACE has determined the preferred alternative would have no effect on ESA-listed species or designated critical habitat. A Memorandum for Record (MFR) detailing the analysis of ESA compliance has been prepared and filed.

5.2.6 Magnuson-Stevens Fishery Conservation and Management Act

The Magnuson-Stevens Fishery Conservation and Management Act (MSA), (16 U.S.C. 1801 et. seq.) requires Federal agencies to consult with NMFS on activities that may adversely affect Essential Fish Habitat (EFH). The objective of an EFH assessment is to determine whether or not the proposed action(s) "may adversely affect" designated EFH for relevant commercial, federally-managed fisheries species within the proposed action area. The assessment describes conservation measures proposed to avoid, minimize, or otherwise offset potential adverse effects to designated EFH resulting from the proposed action.

The EFH mandate applies to all species managed under a Fishery Management Plan (FMP). In the state of Washington, three FMPs are in effect, which cover groundfish, coastal pelagic species, and Pacific salmon. All work for this project would occur in the dry above the Ordinary High Water Mark and have no impact on water quality in the Green River or reservoir. No substrate would be disturbed and no spawning or rearing areas will be altered by construction or dam operations during construction. The project would have no effect on EFH, either during construction or as a result of the completed project. Analysis of impacts to fish is included in the MFR on ESA compliance.

5.2.7 National Historic Preservation Act

Section 106 of the National Historic Preservation Act (NHPA) requires that Federal agencies identify, evaluate and assess the effects of undertakings on cultural resources such as sites, buildings, structures, or objects listed in or eligible for listing in the National Register of Historic Places (NRHP). Eligible properties must generally be at least 50 years old, possess integrity of physical characteristics, and meet at least one of four criteria for significance. Cultural resources found to be eligible for the NRHP are referred to as historic properties. Regulations implementing Section 106 (36 CFR Part 800) encourage maximum coordination with the environmental review process required by NEPA and with other statutes.

In order to comply with Section 106, the USACE coordinated with the Washington State Historic Preservation Officer (SHPO) and the Muckleshoot Indian

Tribe. On April 14th, 2014, the USACE sent letters documenting the Area of Potentail Effects (APE) to the SHPO and the Muckleshoot Indian Tribe. The SHPO responded on April 15th, 2014 agreeing with the APE. A USACE archaeologist at conducted a cultural resource survey of the proposed project area. No archaeological resources were identified during the cultural resource survey. The seismic structure was built sometime after 1970 and is less than 50 years of age. On May 20th, 2014 the USACE sent letters to the SHPO and Muckleshoot Indian Tribe detailing the results of the cultural resource survey and the Corps finding of *no historic properties affected*. The SHPO responded agreeing with the Corps finding on May 21st, 2014. The Muckleshoot Indian Tribe did not comment.

If, during construction activities, the Contractor observes items that might have historical or archeological value, such observations shall be reported immediately to the Contracting Officer, or, if present, the Corps' Construction Supervisor so that the appropriate authorities may be notified and a determination can be made as to their significance and what, if any, special disposition of the finds should be made. The Contractor shall cease all activities that may result in the destruction of these resources and shall prevent his employees from trespassing on, removing, or otherwise damaging such resources.

5.2.8 Native American Graves Protection and Repatriation Act

The Native American Graves Protection and Repatriation Act (NAGPRA) (25 U.S.C. 3001) addresses processes and requirements for federal agencies regarding the discovery, identification, treatment, and repatriation of Native American and Native Hawaiian human remains and cultural items (associated funerary objects, unassociated funerary objects, sacred objects, and objects of cultural patrimony). Consistent with procedures set forth in applicable Federal laws, regulations, and policies, the Corps will proactively work to preserve and protect natural and cultural resources, and establish NAGPRA protocols and procedures.

5.2.9 Migratory Bird Treaty Act

The Migratory Bird Treaty Act of 1918 (16 U.S.C. 703-712) (MBTA) as amended establishes a Federal prohibition, unless permitted by regulations, to "pursue, hunt, take, capture, kill, attempt to take, capture or kill, possess, offer for sale, sell, offer to purchase, purchase, deliver for shipment, ship, cause to be shipped, deliver for transportation, transport, cause to be transported, carry, or cause to be carried by any means whatever, receive for shipment, transportation or carriage, or export, at any time, or in any manner, any migratory bird, included in the terms of this Convention . . . for the protection of migratory birds . . . or any part, nest, or egg of any such bird."

The proposed action will not affect migratory birds. Because no direct harm to any migratory birds is anticipated, a take permit under the MBTA is not required.

5.3 Executive Orders

5.3.1 Executive Order 11990, Protection of Wetlands

Executive Order 11990 encourages Federal agencies to take actions to minimize the destruction, loss, or degradation of wetlands, and to preserve and enhance the natural and beneficial values of wetlands when undertaking Federal activities and programs. The site contains areas with weakly expressed wetland characteristics that fail to meet the criteria for a wetland. These sites also lack a significant nexus to the navigable waters of the US. No wetlands will be affected by the action.

5.3.2 Executive Order 12898, Federal Actions to Address Environmental Justice in Minority Populations and Low-Income Populations

Executive Order 12898, dated February 11, 1994, requires Federal agencies to consider and address environmental justice by identifying and assessing whether agency actions may have disproportionately high and adverse human health or environmental effects on minority or low-income populations. Disproportionately high and adverse effects are those effects that are predominantly borne by minority and/or low-income populations and are appreciably more severe or greater in magnitude than the effects on non-minority or non-low income populations. HAHD is in an area that is closed to the public, and the downstream flow effects are not expected to have more than negligible effects on the human population. Therefore no disproportionate adverse effects on minority or low income populations will occur as a result of the proposal.

5.3.3 Executive Order 11988, Floodplain Management Guidelines

This executive order requires Federal agencies to evaluate the potential effects of actions on floodplains and to avoid undertaking actions that directly or indirectly induce growth in the floodplain or adversely affect natural floodplain values. The proposed action includes an evaluation and repair of HAHD, the purpose of which is to restore the dam to its original functionality. This would not result in further development of the Green River floodplain beyond that which had existed prior to the January 2009 flood.

5.4 Tribal Treaty Rights

In the mid-1850's, the United States entered into treaties with a number of Native American tribes in Washington. These treaties guaranteed the signatory tribes the right to "take fish at usual and accustomed grounds and stations . . . in common with all citizens of the territory" [U.S. v. Washington, 384 F. Supp. 312 at 332 (WDWA 1974)]. In U.S. v. Washington, 384 F. Supp. 312 at 343 - 344, the court also found that the Treaty tribes had the right to take up to 50 percent of the harvestable anadromous fish runs passing through those grounds, as needed to provide them with a moderate standard of living (Fair Share). Over the years, the courts have held that this right comprehends certain subsidiary rights, such as access to their "usual and accustomed" fishing grounds. More than de minimis impacts to access to usual and accustomed fishing area violates this treaty right [Northwest Sea Farms v. Wynn, 931 F. Supp. 1515 at 1522 (W.D. WA 1996)]. Project activities will occur within the usual and accustomed fishing grounds of the Muckleshoot Tribe. No effects to tribal treaty rights are expected since the work will not take place in areas that are or are potentially used for tribal fishing and effects of the proposed work on fishery resources in the Green River are expected to be negligible.

Chapter 6 Technical Review

6.1 District Quality Control Review (DQC) – 35% and 95%

6.2 Biddability, Constructibility, Operability and Environmental (BCOE) Review - TBD

Chapter 7 Outline Specs

Division 1 Fronts

Section	Title
00 01 15	List of Drawings
00 41 00	Bid Schedule
01 14 05	Supplementary Requirements
01 14 10	Site Specific Supplementary Requirements
01 14 50	Emergency Demobilization
01 22 00	Measurement and Payment
01 32 01.00 10	Project Schedule
01 32 16.00 20	Construction Progress Documentation
01 33 00	Submittal Procedures
01 35 26	Governmental Safety Requirements
01 35 40	Environmental Management
01 41 00	Water Quality Standards
01 42 00	Sources for Reference Publications
01 45 01	Quality Control System (QCS)
01 45 10	Contractor Quality Control
01 50 00	Construction Facilities and Temporary Controls
01 56 30	Pollution Control
01 57 17	Dust Control
01 57 20.00 10	Environmental Protection
01 57 23	Temporary Storm Water Pollution Control
01 58 00	Project Identification
01 62 35	Recycled / Recovered Materials
01 74 16	Construction Spoils Handling
01 74 19	Construction and Demolition Waste Management
01 78 00	Closeout Submittals
01 78 39	As-Built Records and Drawings
01703	Warranty of Construction (required or in Contract front material?)

Division 3 Concrete

Section	Title
03 37 13	Shotcrete

Division 31 Earthwork

Section	Title
31 00 00	Earthwork
31 11 00	Clearing and Grubbing
31 23 00.00 20	Excavation and Fill
31 32 11	Soil Surface Erosion Control

Division 32 Exterior Improvement

Section	Title
32 15 00	Aggregate Surface Course

Division 33 Utilities

Section	Title
33 40 00	Storm Drainage Utilities

Appendix A

Geotechnical Design Calculations

United States Department of Agriculture

Natural Resources Conservation Service

A product of the National Cooperative Soil Survey, a joint effort of the United States Department of Agriculture and other Federal agencies, State agencies including the Agricultural Experiment Stations, and local participants

Custom Soil Resource Report for Snoqualmie Pass Area, Washington (Parts of King and Pierce Counties)

HHD Left Bank Drainage

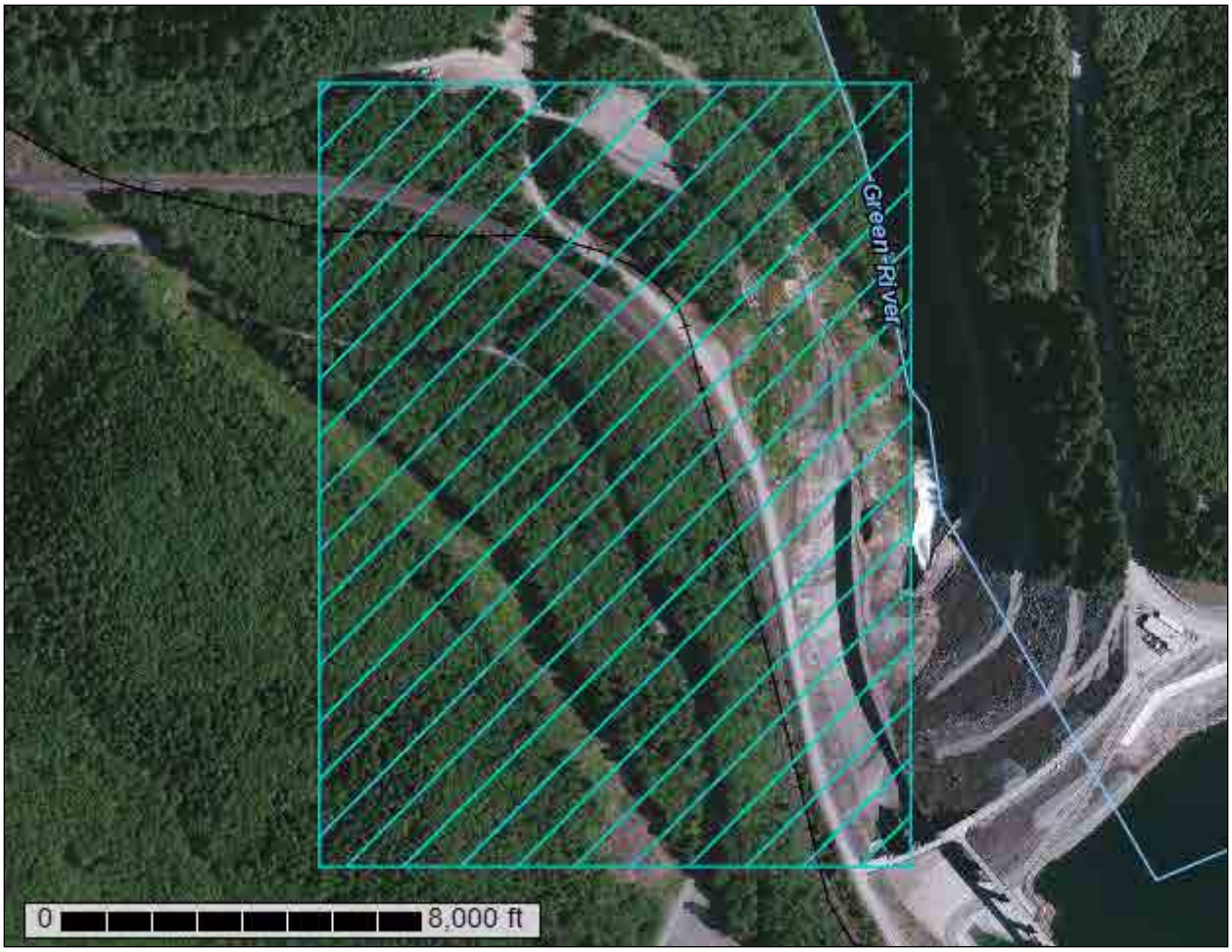

September 6, 2013

Preface

Soil surveys contain information that affects land use planning in survey areas. They highlight soil limitations that affect various land uses and provide information about the properties of the soils in the survey areas. Soil surveys are designed for many different users, including farmers, ranchers, foresters, agronomists, urban planners, community officials, engineers, developers, builders, and home buyers. Also, conservationists, teachers, students, and specialists in recreation, waste disposal, and pollution control can use the surveys to help them understand, protect, or enhance the environment.

Various land use regulations of Federal, State, and local governments may impose special restrictions on land use or land treatment. Soil surveys identify soil properties that are used in making various land use or land treatment decisions. The information is intended to help the land users identify and reduce the effects of soil limitations on various land uses. The landowner or user is responsible for identifying and complying with existing laws and regulations.

Although soil survey information can be used for general farm, local, and wider area planning, onsite investigation is needed to supplement this information in some cases. Examples include soil quality assessments (http://soils.usda.gov/sqi/) and certain conservation and engineering applications. For more detailed information, contact your local USDA Service Center (http://offices.sc.egov.usda.gov/locator/app?agency=nrcs) or your NRCS State Soil Scientist (http://soils.usda.gov/contact/state_offices/).

Great differences in soil properties can occur within short distances. Some soils are seasonally wet or subject to flooding. Some are too unstable to be used as a foundation for buildings or roads. Clayey or wet soils are poorly suited to use as septic tank absorption fields. A high water table makes a soil poorly suited to basements or underground installations.

The National Cooperative Soil Survey is a joint effort of the United States Department of Agriculture and other Federal agencies, State agencies including the Agricultural Experiment Stations, and local agencies. The Natural Resources Conservation Service (NRCS) has leadership for the Federal part of the National Cooperative Soil Survey.

Information about soils is updated periodically. Updated information is available through the NRCS Soil Data Mart Web site or the NRCS Web Soil Survey. The Soil Data Mart is the data storage site for the official soil survey information.

The U.S. Department of Agriculture (USDA) prohibits discrimination in all its programs and activities on the basis of race, color, national origin, age, disability, and where applicable, sex, marital status, familial status, parental status, religion, sexual orientation, genetic information, political beliefs, reprisal, or because all or a part of an individual's income is derived from any public assistance program. (Not all prohibited bases apply to all programs.) Persons with disabilities who require alternative means

for communication of program information (Braille, large print, audiotape, etc.) should contact USDA's TARGET Center at (202) 720-2600 (voice and TDD). To file a complaint of discrimination, write to USDA, Director, Office of Civil Rights, 1400 Independence Avenue, S.W., Washington, D.C. 20250-9410 or call (800) 795-3272 (voice) or (202) 720-6382 (TDD). USDA is an equal opportunity provider and employer.

Contents

Preface.....2
Soil Map.....5
Soil Map.....6
Legend.....7
Map Unit Legend.....8
Map Unit Descriptions.....8
Snoqualmie Pass Area, Washington (Parts of King and Pierce Counties).....10
9—Arents, 0 to 8 percent slopes.....10
97—Kanaskat gravelly sandy loam, 30 to 65 percent slopes.....10
146—Nargar fine sandy loam, 0 to 15 percent slopes.....11
147—Nargar fine sandy loam, 15 to 30 percent slopes.....12
264—Typic Haplorthods, 35 to 100 percent slopes.....13
285—Water.....13

Soil Map

The soil map section includes the soil map for the defined area of interest, a list of soil map units on the map and extent of each map unit, and cartographic symbols displayed on the map. Also presented are various metadata about data used to produce the map, and a description of each soil map unit.

Custom Soil Resource Report
Soil Map

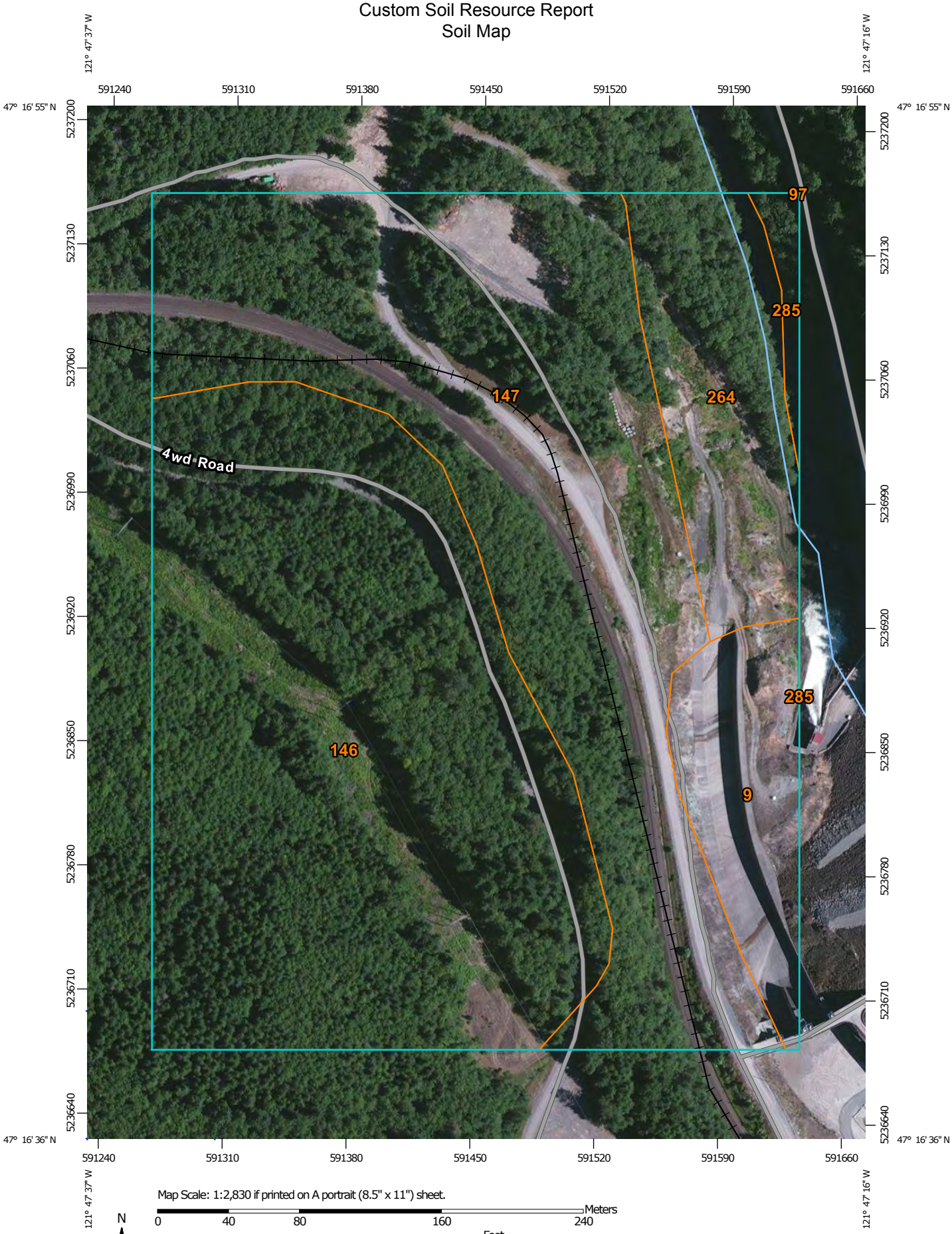

Map Scale: 1:2,830 if printed on A portrait (8.5" x 11") sheet.

N

Meters: 0 40 80 160 240

Feet: 0 100 200 400 600

Map projection: Web Mercator Corner coordinates: WGS84 Edge tics: UTM Zone 10N WGS84

MAP LEGEND

Area of Interest (AOI)

Area of Interest (AOI)

Soils

Soil Map Unit Polygons

Soil Map Unit Lines

Soil Map Unit Points

Special Point Features

Blowout

Borrow Pit

Clay Spot

Closed Depression

Gravel Pit

Gravelly Spot

Landfill

Lava Flow

Marsh or swamp

Mine or Quarry

Miscellaneous Water

Perennial Water

Rock Outcrop

Saline Spot

Sandy Spot

Severely Eroded Spot

Sinkhole

Slide or Slip

Sodic Spot

Spoil Area

Stony Spot

Very Stony Spot

Wet Spot

Other

Special Line Features

Water Features

Streams and Canals

Transportation

Rails

Interstate Highways

US Routes

Major Roads

Local Roads

Background

Aerial Photography

MAP INFORMATION

The soil surveys that comprise your AOI were mapped at 1:24,000.

Warning: Soil Map may not be valid at this scale.

Enlargement of maps beyond the scale of mapping can cause misunderstanding of the detail of mapping and accuracy of soil line placement. The maps do not show the small areas of contrasting soils that could have been shown at a more detailed scale.

Please rely on the bar scale on each map sheet for map measurements.

Source of Map: Natural Resources Conservation Service
Web Soil Survey URL: http://websoilsurvey.nrcs.usda.gov
Coordinate System: Web Mercator (EPSG:3857)

Maps from the Web Soil Survey are based on the Web Mercator projection, which preserves direction and shape but distorts distance and area. A projection that preserves area, such as the Albers equal-area conic projection, should be used if more accurate calculations of distance or area are required.

This product is generated from the USDA-NRCS certified data as of the version date(s) listed below.

Soil Survey Area: Snoqualmie Pass Area, Washington (Parts of King and Pierce Counties)
Survey Area Data: Version 9, Jul 2, 2012

Soil map units are labeled (as space allows) for map scales 1:50,000 or larger.

Date(s) aerial images were photographed: Jul 25, 2010—Aug 19, 2010

The orthophoto or other base map on which the soil lines were compiled and digitized probably differs from the background imagery displayed on these maps. As a result, some minor shifting of map unit boundaries may be evident.

Map Unit Legend

Snoqualmie Pass Area, Washington (Parts of King and Pierce Counties) (WA634)			
Map Unit Symbol	**Map Unit Name**	**Acres in AOI**	**Percent of AOI**
9	Arents, 0 to 8 percent slopes	3.0	6.8%
97	Kanaskat gravelly sandy loam, 30 to 65 percent slopes	0.0	0.0%
146	Nargar fine sandy loam, 0 to 15 percent slopes	19.6	44.7%
147	Nargar fine sandy loam, 15 to 30 percent slopes	16.5	37.7%
264	Typic Haplorthods, 35 to 100 percent slopes	4.3	9.8%
285	Water	0.4	1.0%
Totals for Area of Interest		**43.8**	**100.0%**

Map Unit Descriptions

The map units delineated on the detailed soil maps in a soil survey represent the soils or miscellaneous areas in the survey area. The map unit descriptions, along with the maps, can be used to determine the composition and properties of a unit.

A map unit delineation on a soil map represents an area dominated by one or more major kinds of soil or miscellaneous areas. A map unit is identified and named according to the taxonomic classification of the dominant soils. Within a taxonomic class there are precisely defined limits for the properties of the soils. On the landscape, however, the soils are natural phenomena, and they have the characteristic variability of all natural phenomena. Thus, the range of some observed properties may extend beyond the limits defined for a taxonomic class. Areas of soils of a single taxonomic class rarely, if ever, can be mapped without including areas of other taxonomic classes. Consequently, every map unit is made up of the soils or miscellaneous areas for which it is named and some minor components that belong to taxonomic classes other than those of the major soils.

Most minor soils have properties similar to those of the dominant soil or soils in the map unit, and thus they do not affect use and management. These are called noncontrasting, or similar, components. They may or may not be mentioned in a particular map unit description. Other minor components, however, have properties and behavioral characteristics divergent enough to affect use or to require different management. These are called contrasting, or dissimilar, components. They generally are in small areas and could not be mapped separately because of the scale used. Some small areas of strongly contrasting soils or miscellaneous areas are identified by a special symbol on the maps. If included in the database for a given area, the contrasting minor components are identified in the map unit descriptions along with some characteristics of each. A few areas of minor components may not have been observed, and consequently they are not mentioned in the descriptions, especially where the pattern was so complex that it was impractical to make enough observations to identify all the soils and miscellaneous areas on the landscape.

The presence of minor components in a map unit in no way diminishes the usefulness or accuracy of the data. The objective of mapping is not to delineate pure taxonomic classes but rather to separate the landscape into landforms or landform segments that have similar use and management requirements. The delineation of such segments on the map provides sufficient information for the development of resource plans. If intensive use of small areas is planned, however, onsite investigation is needed to define and locate the soils and miscellaneous areas.

An identifying symbol precedes the map unit name in the map unit descriptions. Each description includes general facts about the unit and gives important soil properties and qualities.

Soils that have profiles that are almost alike make up a *soil series*. Except for differences in texture of the surface layer, all the soils of a series have major horizons that are similar in composition, thickness, and arrangement.

Soils of one series can differ in texture of the surface layer, slope, stoniness, salinity, degree of erosion, and other characteristics that affect their use. On the basis of such differences, a soil series is divided into *soil phases*. Most of the areas shown on the detailed soil maps are phases of soil series. The name of a soil phase commonly indicates a feature that affects use or management. For example, Alpha silt loam, 0 to 2 percent slopes, is a phase of the Alpha series.

Some map units are made up of two or more major soils or miscellaneous areas. These map units are complexes, associations, or undifferentiated groups.

A *complex* consists of two or more soils or miscellaneous areas in such an intricate pattern or in such small areas that they cannot be shown separately on the maps. The pattern and proportion of the soils or miscellaneous areas are somewhat similar in all areas. Alpha-Beta complex, 0 to 6 percent slopes, is an example.

An *association* is made up of two or more geographically associated soils or miscellaneous areas that are shown as one unit on the maps. Because of present or anticipated uses of the map units in the survey area, it was not considered practical or necessary to map the soils or miscellaneous areas separately. The pattern and relative proportion of the soils or miscellaneous areas are somewhat similar. Alpha-Beta association, 0 to 2 percent slopes, is an example.

An *undifferentiated group* is made up of two or more soils or miscellaneous areas that could be mapped individually but are mapped as one unit because similar interpretations can be made for use and management. The pattern and proportion of the soils or miscellaneous areas in a mapped area are not uniform. An area can be made up of only one of the major soils or miscellaneous areas, or it can be made up of all of them. Alpha and Beta soils, 0 to 2 percent slopes, is an example.

Some surveys include *miscellaneous areas*. Such areas have little or no soil material and support little or no vegetation. Rock outcrop is an example.

Snoqualmie Pass Area, Washington (Parts of King and Pierce Counties)

9—Arents, 0 to 8 percent slopes

Map Unit Setting

Mean annual precipitation: 40 to 80 inches
Mean annual air temperature: 45 to 52 degrees F
Frost-free period: 90 to 200 days

Map Unit Composition

Arents and similar soils: 85 percent
Minor components: 1 percent

Description of Arents

Setting

Landform: Terraces, plains
Parent material: Volcanic ash and glacial drift

Properties and qualities

Slope: 0 to 8 percent
Depth to restrictive feature: More than 80 inches
Drainage class: Well drained
Capacity of the most limiting layer to transmit water (Ksat): High (1.98 to 5.95 in/hr)
Depth to water table: More than 80 inches
Frequency of flooding: None
Frequency of ponding: None
Available water capacity: Low (about 5.5 inches)

Interpretive groups

Farmland classification: Not prime farmland
Land capability (nonirrigated): 3s
Hydrologic Soil Group: A

Typical profile

0 to 35 inches: Gravelly sandy loam
35 to 60 inches: Stratified extremely gravelly coarse sand to gravelly sandy loam

Minor Components

Norma

Percent of map unit: 1 percent
Landform: Depressions

97—Kanaskat gravelly sandy loam, 30 to 65 percent slopes

Map Unit Setting

Elevation: 1,000 to 1,700 feet
Mean annual precipitation: 50 to 80 inches
Mean annual air temperature: 46 to 48 degrees F
Frost-free period: 140 to 170 days

Map Unit Composition

Kanaskat and similar soils: 100 percent

Description of Kanaskat

Setting

Landform: Hillslopes
Landform position (two-dimensional): Backslope
Parent material: Volcanic ash and colluvium derived from igneous rock

Properties and qualities

Slope: 30 to 65 percent
Depth to restrictive feature: 60 to 72 inches to paralithic bedrock
Drainage class: Well drained
Capacity of the most limiting layer to transmit water (Ksat): Moderately high to high (0.57 to 1.98 in/hr)
Depth to water table: More than 80 inches
Frequency of flooding: None
Frequency of ponding: None
Available water capacity: Moderate (about 7.4 inches)

Interpretive groups

Farmland classification: Not prime farmland
Land capability (nonirrigated): 7e
Hydrologic Soil Group: B

Typical profile

0 to 11 inches: Gravelly sandy loam
11 to 23 inches: Extremely gravelly loam
23 to 38 inches: Very gravelly sandy loam
38 to 60 inches: Extremely gravelly coarse sandy loam
60 to 70 inches: Unweathered bedrock

146—Nargar fine sandy loam, 0 to 15 percent slopes

Map Unit Setting

Elevation: 50 to 1,200 feet
Mean annual precipitation: 50 to 75 inches
Mean annual air temperature: 46 to 50 degrees F
Frost-free period: 120 to 200 days

Map Unit Composition

Nargar and similar soils: 100 percent

Description of Nargar

Setting

Landform: Terraces
Parent material: Volcanic ash and sandy alluvium

Properties and qualities

Slope: 0 to 15 percent

Depth to restrictive feature: 20 to 40 inches to strongly contrasting textural stratification
Drainage class: Well drained
Capacity of the most limiting layer to transmit water (Ksat): Moderately high to high (0.57 to 1.98 in/hr)
Depth to water table: More than 80 inches
Frequency of flooding: None
Frequency of ponding: None
Available water capacity: Low (about 4.9 inches)

Interpretive groups
Farmland classification: Farmland of statewide importance
Land capability (nonirrigated): 3e
Hydrologic Soil Group: B

Typical profile
0 to 2 inches: Fine sandy loam
2 to 24 inches: Fine sandy loam
24 to 60 inches: Sand

147—Nargar fine sandy loam, 15 to 30 percent slopes

Map Unit Setting
Elevation: 50 to 1,200 feet
Mean annual precipitation: 50 to 75 inches
Mean annual air temperature: 46 to 50 degrees F
Frost-free period: 120 to 200 days

Map Unit Composition
Nargar and similar soils: 100 percent

Description of Nargar

Setting
Landform: Terraces
Parent material: Volcanic ash and sandy alluvium

Properties and qualities
Slope: 15 to 30 percent
Depth to restrictive feature: 20 to 40 inches to strongly contrasting textural stratification
Drainage class: Well drained
Capacity of the most limiting layer to transmit water (Ksat): Moderately high to high (0.57 to 1.98 in/hr)
Depth to water table: More than 80 inches
Frequency of flooding: None
Frequency of ponding: None
Available water capacity: Low (about 4.9 inches)

Interpretive groups
Farmland classification: Farmland of statewide importance
Land capability (nonirrigated): 4e
Hydrologic Soil Group: B

Typical profile

0 to 2 inches: Fine sandy loam
2 to 24 inches: Fine sandy loam
24 to 60 inches: Sand

264—Typic Haplorthods, 35 to 100 percent slopes

Map Unit Setting

Mean annual precipitation: 50 to 80 inches
Mean annual air temperature: 46 degrees F
Frost-free period: 120 to 160 days

Map Unit Composition

Typic haplorthods and similar soils: 100 percent

Description of Typic Haplorthods

Setting

Landform: Mountainsides, valley sides
Parent material: Volcanic ash, glacial drift and colluvium

Properties and qualities

Slope: 35 to 99 percent
Depth to restrictive feature: 20 to 60 inches to densic material
Drainage class: Well drained
Capacity of the most limiting layer to transmit water (Ksat): Very low to moderately low (0.00 to 0.06 in/hr)
Depth to water table: More than 80 inches
Frequency of flooding: None
Frequency of ponding: None
Available water capacity: Low (about 5.0 inches)

Interpretive groups

Farmland classification: Not prime farmland
Land capability (nonirrigated): 7e
Hydrologic Soil Group: B

Typical profile

0 to 3 inches: Very gravelly loam
3 to 45 inches: Very gravelly loam
45 to 60 inches: Extremely gravelly loamy sand

285—Water

Map Unit Composition

Water: 100 percent

Description of Water

Setting

Landform: Alluvial cones

Geological Map around Howard Hanson Dam

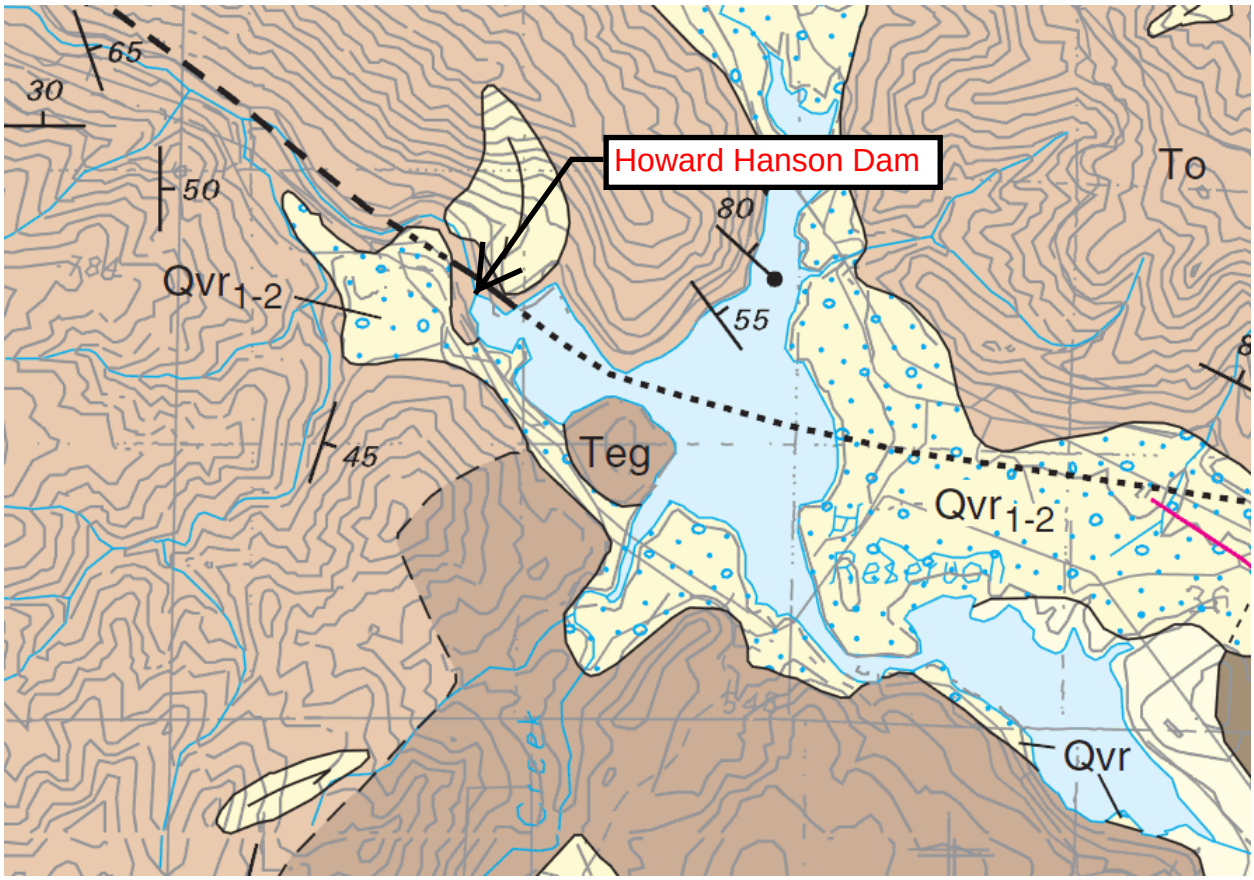

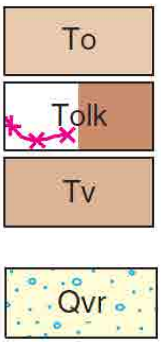

Ohanapecosh Formation (Oligocene)—Locally, includes:

Tuff member of Lake Keechelus

Volcanic rocks (Oligocene)

Recessional outwash deposits

Geologic Map of the Snoqualmie Pass 30x60 Minute Quadrangle, Washington. U.S. Geological Survey.

R.W. Tabot, V.A. Frizzell, Jr., D.B. Booth, and R.B. Waitt. 2000.

Qb **Bog deposits (Holocene and Pleistocene)**—Peat and alluvium. Poorly drained and at least intermittently wet. Grades into alluvium and lahar deposits (units Qa and Qlh)

Ql **Landslide deposits (Holocene and Pleistocene)**—Diamicton of angular clasts of bedrock and surficial deposits derived from upslope. Mostly shown with arrow(s) depicting downslope movement direction

Qmw **Mass-wastage deposits (Holocene and Pleistocene)**—Colluvium, soil, or landslide debris with indistinct morphology, mapped where sufficiently continuous and thick to obscure underlying material. Unit is gradational with landslide deposits (Ql) and alluvium (Qa)

Qt **Talus deposits (Holocene and Pleistocene)**—Nonsorted angular boulder gravel to boulder diamicton. Found low on hillslopes, gradational with alluvium (Qa). At higher altitudes, includes small rock-avalanche deposits as well as some Holocene moraine, rock glacier, and protalus rampart deposits that lack characteristic morphology. Generally unvegetated

Qlh **Lahar deposits (Holocene and Pleistocene)**—Nonsorted muddy boulder diamicton to moderately sorted sand in the White River valley and adjacent lowlands. Includes deposits of numerous Holocene catastrophic mudflows from Mt. Rainier volcano south of the Snoqualmie Pass quadrangle. Most extensively exposed is the Holocene Osceola Mudflow (Crandell and Waldron, 1956). Also includes hyperconcentrated streamflow deposits (Smith, 1986) originating from volcanic source terrane and inferred to result from volcanic activity

GLACIAL DRIFT AND RELATED DEPOSITS

Qu **Surficial deposits, undivided (Holocene and Pleistocene)**

Qag **Alpine glacial deposits (Pleistocene)**—Glacial deposits ranging from boulder till in uplands and up valley to gravel or sand outwash on broad valley floors. On valley sides and uplands includes areas veneered with drift but also includes bedrock, alluvial fans, colluvium, or talus deposits. On valley floors also includes small fans, bogs, and modern stream alluvium. Areas of thin, sparse drift not distinguished from bedrock.

Deposits of Vashon stade of Fraser glaciation of Armstrong and others (1965) of Cordilleran ice sheet (Pleistocene)—Divided into:

Qvr **Recessional outwash deposits**—Stratified sand and gravel, moderately to well sorted, and well-bedded silty sand to silty clay deposited in proglacial and ice-marginal environments. Subscripts (1-7) indicate chronologic sequence of major fluvial deposits, with 1 being the oldest

Qvi **Ice-contact deposits**—Stratified water-laid sand and gravel, silt, clay, and minor till with abrupt grain-size changes and collapse features indicating deposition adjacent to active or stagnant ice. Subscripts (1-5) follow the same chronology as for recessional outwash deposits (Qvr) and indicate probable ice-marginal zones during deposition of corresponding recessional outwash deposit

Qvt **Till**—Mainly compact diamicton with subangular to rounded clasts, glacially transported and deposited. Includes minor stratified fluvial deposits. In ice-marginal areas and where covered by thin layer of recessional outwash, contact with recessional-outwash or ice-contact deposits (Qvr or Qvi) is gradational

Qva **Advance outwash deposits**—Well-bedded gravelly sand to fine-grained sand, generally unoxidized, deposited in proglacial streams. Includes minor stratified sediments that predate the Fraser glaciation

Qvu **Vashon Drift, undivided**

Qpf **Glacial and nonglacial deposits of pre-Fraser glaciation age (Pleistocene)**—Firm gray clay and deeply weathered stratified sand and gravel. Evidence of strong in-place weathering throughout exposures, includes oxidation, weathering rinds, and clay-mineral replacement

Qpfa **Alpine glacial drift of pre-Fraser glaciation age (Pleistocene)**—Deeply weathered till with oxidized matrix and weathering rinds on clasts

BEDROCK

Qra **Andesite of Mt. Rainier (Pleistocene)**—Gray, porphyritic two-pyroxene andesite rich in phenocrysts of zoned plagioclase, augite, hypersthene, and opacitised hornblende. Pilotaxitic groundmass with plagioclase, pyroxene, and opaque minerals

Qcc **Basalt of Canyon Creek (Pleistocene)**—Light-gray olivine basalt. Olivine, partially altered to iddingsite rims, present as phenocrysts

ation is locally so pervasive that original grain types and textures are not discernable, but rocks are generally less altered than dacite tuff in Ohanapecosh Formation. Locally welded and with crude columns. Gray to tan, in part greenish, well-bedded polymictic volcanic sandstone, conglomerate, siltstone, and tuff locally exhibit sedimentary structures such as cross-bedding and ripple marks. Includes rare mudflow breccia. Rocks in quadrangle are in part described by Fischer (1970, p. 34-53), Hartman (1973, p. 15-21, tables 6, 7), and Vance and others (1987)

Tfcr **Chenuis Ridge unit**—Light-greenish-gray rhyodacitic ash-flow tuff, breccia, and minor interbedded volcaniclastic sedimentary rocks. Similar to Sun Top unit. Near Carbon River stock (fig. 2), rocks are locally hornfelsic

Teg **Volcanic rocks of Eagle Gorge (Miocene and Oligocene)**—Basaltic andesite and basalt flows, breccia, and minor well-bedded tuff and volcanic sedimentary rocks. Predominantly dark-green to black andesitic flows and flow breccia. Flows variously exhibit platy or columnar jointing, vesicular tops, scoriaceous or amygdaloidal zones, and minor drusy quartz zones. Breccia generally monolithologic. Plagioclase, clinopyroxene, and lesser hypersthene and hornblende phyric andesite exhibit intersertal and intergranular texture; with secondary smectites, hematite, calcite, and quartz. Minor well-bedded multicolored tuff and breccia; volcanic sandstone, conglomerate, siltstone, and dacite; rare mudflow breccia

Volcanic rocks of Mount Daniel (Oligocene)—Divided into:

Tdv **Andesite, dacite, and rhyolite volcanic rocks**—Predominantly clinopyroxene and clinopyroxene-hypersthene andesite and dacite tuff, breccia, and subordinate flows. Breccia beds as thick as 25 m. Commonly highly altered to calcite and smectites. Some thinly bedded (water-laid?) tuff and volcanic sandstone. Detailed descriptions in Ellis (1959, p. 65-70) and, for rocks north of Snoqualmie Pass quadrangle, in Simonson (1981)

Tdgr **Granophyre and rhyolite porphyry**—Intrusive rocks east of Waptus River grade, from medium-grained hornblende granite to fine-grained porphyritic granophyre. Highly altered to chlorite, epidote, sericite, and prehnite. West of river, plagioclase and quartz phyric rhyolite with devitrified groundmass. On Cle Elum River, intrusive rhyolite porphyry breccia is filled with inclusions of country rock and broken phenocrysts of quartz, plagioclase, and K-feldspar. These rocks are closely associated with tonalite dikes and they are thermally metamorphosed

Tdrd **Rhyodacite tuff**—Vitric crystal-lithic dacite tuff, commonly containing plagioclase, resorbed quartz and silicic to intermediate volcanic fragments in devitrified glassy matrix. Probably of ash-flow origin. Similar to the member of Lake Keechelus (Tolk), but with more quartz phenocrysts

Tdb **Breccia**—Monolithologic breccia composed of angular sandstone clasts as large as 3 m across derived from Swauk Formation. Rare volcanic clasts. Further descriptions in Ellis (1959, p. 66-67) and Simonson (1981, p. 40-41)

Tdr **Rhyolite**—Quartz and plagioclase phyric devitrified rhyolite. Mostly tuff and breccia rich in devitrified shards, locally eutaxitic. Rhyolite on Cone Mountain [13] may be intrusion

To **Ohanapecosh Formation (Oligocene)**—Well-bedded, multicolored, volcanic- and crystal-lithic andesitic tuff and breccia and volcaniclastic sedimentary rocks alternating with massive tuff breccia, subordinate basalt and andesite flows and flow breccia, and minor rhyolite tuff. Characteristically light green, but also pistachio green, light-bluish green, purplish, black, brown, or white. Mixed volcanic-lithic, in part pumice-rich or feldspar-rich tuff, lapilli, and breccia. Massive to well-bedded, mono- and polymictic breccias contain red, yellow, brown, green, or blue-green clasts of andesite porphyry and basalt in feldspar crystal-rich matrix. Clasts generally about 2 to 6 cm in diameter, but as large as 2 m. Well-bedded volcanic sandstone and comglomerate are rich in plagioclase crystals and contain variety of volcanic rock fragments and rare chert and granitoid clasts. Volcanic argillite is, in part, rich in organic material and contains leaf impressions. Minor fresh to mostly highly altered andesite and basalt flows, flow breccia, and mudflow breccia are locally present, particularly in basal parts of unit on northeast and east side of outcrop area. Dark-green, brown or black, weathering to light-green or brown, one- and two-pyroxene andesite porphyry contains phenocrysts or glomerocrysts of plagioclase or plagio-

clase and pyroxene. Commonly trachytic with groundmass composed of plagioclase microlites, clinopyroxene, opaque minerals, and alteration products. Flows locally exhibit platy jointing, columns, and vesicular tops. Dark basalt with small plagioclase, clinopyroxene, and olivine phenocrysts set in groundmass of plagioclase, opaque, clinopyroxene, and alteration minerals. Plagioclase locally replaced by calcite, and pyroxene by smectite. Other alteration minerals include quartz, zeolite, calcite, chalcedony, smectite, clays, and chlorite that replace minerals, lithic grains, or fill vugs. Hartman (1973, p. 38-48, fig.8) reported minerals indicative of "low-grade metamorphism" (laumontite-chlorite-quartz and epidote-prehnite-chlorite-quartz assemblages), but added that rocks were not pervasively altered and that alteration likely had hydrothermal origin. Minor crystal-rich dacite and rhyolite ash-flow tuff generally contains plagioclase and partially embayed quartz crystals as well as volcanic rock fragments, pumice, or altered glass shards in generally altered matrix, which may contain potassium feldspar. In part, with clinopyroxene microphenocrysts that in general are at least partially altered to smectite clays. On south side of Huckleberry Mountain, between strands of the White River Fault, unit includes variety of atypical rocks, including dacite ash-flow tuffs similar to Sun Top unit (Tfst) and poorly consolidated tuffaceous shales that may be much younger than Ohanapecosh Formation (To). Locally, includes:

Tolk **Tuff member of Lake Keechelus**—Dacite crystal-vitric tuff and breccia consisting of plagioclase (20 to 25 percent), quartz (7 to 11 percent), and pyroxene (trace to 4 percent, altered to smectite) phenocrysts in groundmass of quartz, plagioclase, potassium feldspar, and devitrified glass. Light greenish, weathering to light pink or salmon. Bedding locally defined by flattened pumice. Breccia blocks as large as 1 m. Rocks of unit described in detail by Hammond (1963, p. 123-144)

Tv **Volcanic rocks (Oligocene)**—Mostly andesite with minor dacite and rhyolite in coarse breccia, tuff, ash flow-tuff, and rare flows. Mostly highly recrystallized by thermal metamorphism; many rocks are hornblende-biotite hornfels. As mapped, may include some rocks belonging to underlying Naches Formation

ROCKS WEST OF STRAIGHT CREEK FAULT

Tdg **Diabase, gabbro, and basalt (Oligocene? and Eocene)**—In Puget Lowlands, consists of dark-gray porphyritic calcic andesite and may include minor basalt or dacite (Vine, 1969, p. 32-34). Euhedral to subhedral phenocrysts of andesine and augite dominate; variously altered to smectite clays, calcite, and chlorite. Found mostly as sills or sill-like bodies less than 10 m thick, but some as thick as 50 m, and one about 125 m

GREEN RIVER-CABIN CREEK BLOCK

Tn **Naches Formation (early Oligocene? to middle Eocene)**—Rhyolite, andesite, and basalt flows, tuff, and breccia with interbeds of feldspathic subquartzose sandstone and siltstone as well as rare coal. Well-bedded andesite and basalt flows and breccia are nondescript, porphyritic to aphyric, dark-green to black rocks, weathering to brown. In part amygdaloidal, with columns, or with brecciated and vesicular tops. Rhyolite forms mostly flow-banded flows or domes and minor ash-flow tuffs. Interbedded sedimentary rocks are white to light-tan or gray, coarse-grained micaceous feldspathic sandstones, exhibiting crossbeds and graded bedding, and black argillite and laminated siltstone. Both volcanic and sedimentary rocks are thermally metamorphosed adjacent to Miocene stocks and plutons. Ort and others (1983) presented chemistry of volcanic rocks. Locally, divided into:

Tns **Feldspathic sandstone and volcanic rocks (late and middle Eocene)**—Well-bedded, medium- to coarse-grained, tan to gray, predominantly micaceous feldspathic to feldspatholithic subquartzose sandstone and interbedded siltstone and shale, with conspicuous rhyolite, andesite, and basalt flows, tuff, and breccia. Contains interbeds of coal-bearing shale and rare volcanic clast-rich pebble conglomerate and quartz-pebble grit. Leaf fossils locally common. Volcanic clasts constitute only about 28 percent of framework grains in sandstone (Frizzell, 1979, p. 47)

Tnr **Rhyolite (late and middle Eocene)**—Mostly white to gray, flow-banded, platy-jointed flows or domes with ash-flow tuff containing flattened pumice fragments. In beds meters to hundreds of meters thick. Includes some probably intrusive rhyolite,

1956 HHD Spillway Exploration Boring Locations and Logs

Figure 1 – Boring Locations

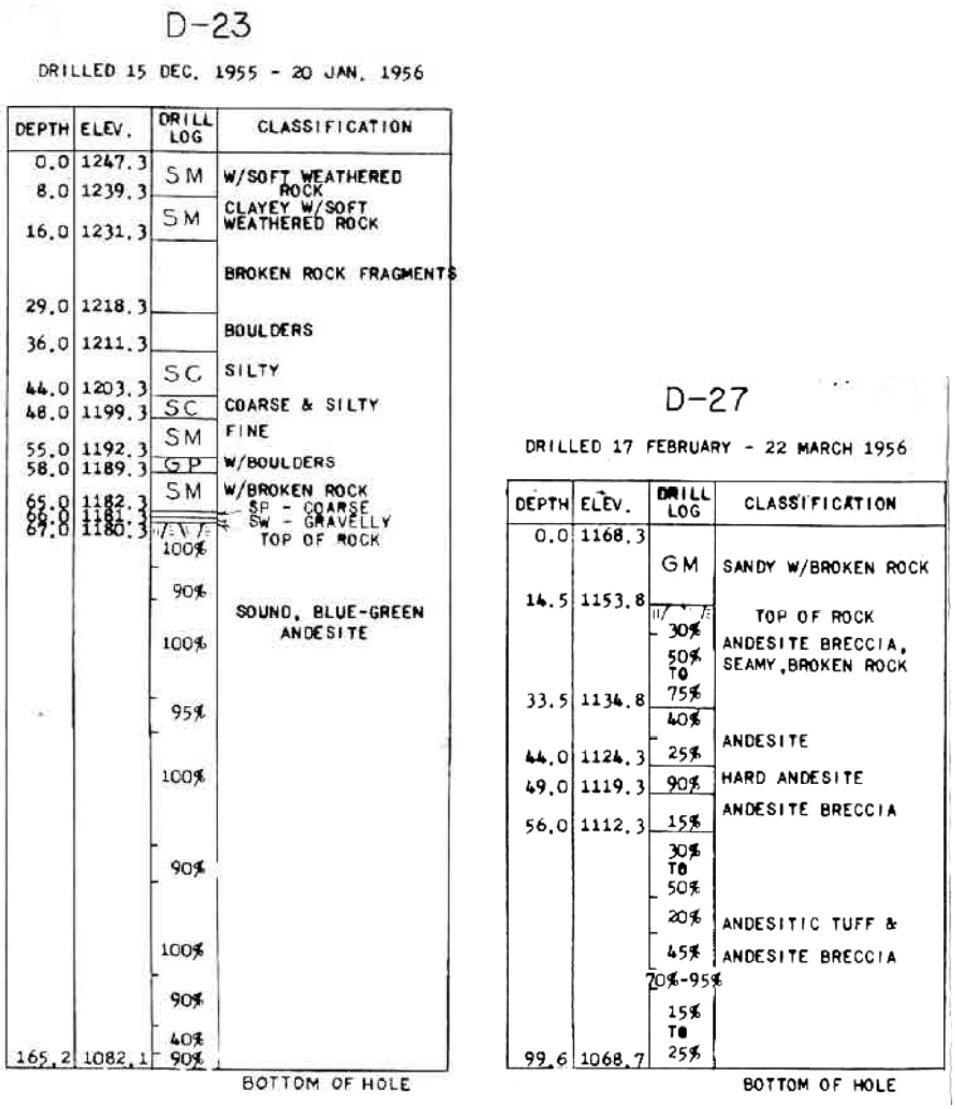

D-23

DRILLED 15 DEC. 1955 - 20 JAN. 1956

DEPTH	ELEV.	DRILL LOG	CLASSIFICATION
0.0	1247.3	SM	W/SOFT WEATHERED ROCK
8.0	1239.3	SM	CLAYEY W/SOFT WEATHERED ROCK
16.0	1231.3		BROKEN ROCK FRAGMENTS
29.0	1218.3		BOULDERS
36.0	1211.3	SC	SILTY
44.0	1203.3	SC	COARSE & SILTY
48.0	1199.3	SM	FINE
55.0	1192.3	GP	W/BOULDERS
58.0	1189.3	SM	W/BROKEN ROCK
65.0	1182.3		SP - COARSE
66.0	1181.3		SW - GRAVELLY
67.0	1180.3		TOP OF ROCK
		100%	
		90%	SOUND, BLUE-GREEN ANDESITE
		100%	
		95%	
		100%	
		90%	
		100%	
		90%	
		40%	
165.2	1082.1	90%	

BOTTOM OF HOLE

D-27

DRILLED 17 FEBRUARY - 22 MARCH 1956

DEPTH	ELEV.	DRILL LOG	CLASSIFICATION
0.0	1168.3	GM	SANDY W/BROKEN ROCK
14.5	1153.8		TOP OF ROCK
		30%	ANDESITE BRECCIA, SEAMY, BROKEN ROCK
		50% TO 75%	
33.5	1134.8	40%	
44.0	1124.3	25%	ANDESITE
49.0	1119.3	90%	HARD ANDESITE
56.0	1112.3	15%	ANDESITE BRECCIA
		30% TO 50%	
		20%	ANDESITIC TUFF &
		45%	ANDESITE BRECCIA
		70%-95%	
		15% TO 25%	
99.6	1068.7		

BOTTOM OF HOLE

Figure 2 – Boring Logs from File No. E-56-6-61 – Plate 8

PSH Deaggregation on NEHRP BC rock
Howard_A._Hanso 121.790º W, 47.280 N.

Peak Horiz. Ground Accel.>=0.11579 g
Ann. Exceedance Rate .941E-02. Mean Return Time 108 years
Mean (R,M,ε_0) 59.6 km, 6.45, 0.33
Modal (R,M,ε_0) = 8.2 km, 5.20, -0.56 (from peak R,M bin)
Modal (R,M,ε*) =153.0 km, 9.00, 0 to 1 sigma (from peak R,M,ε bin)
Binning: DeltaR 10. km, deltaM=0.2, Deltaε=1.0

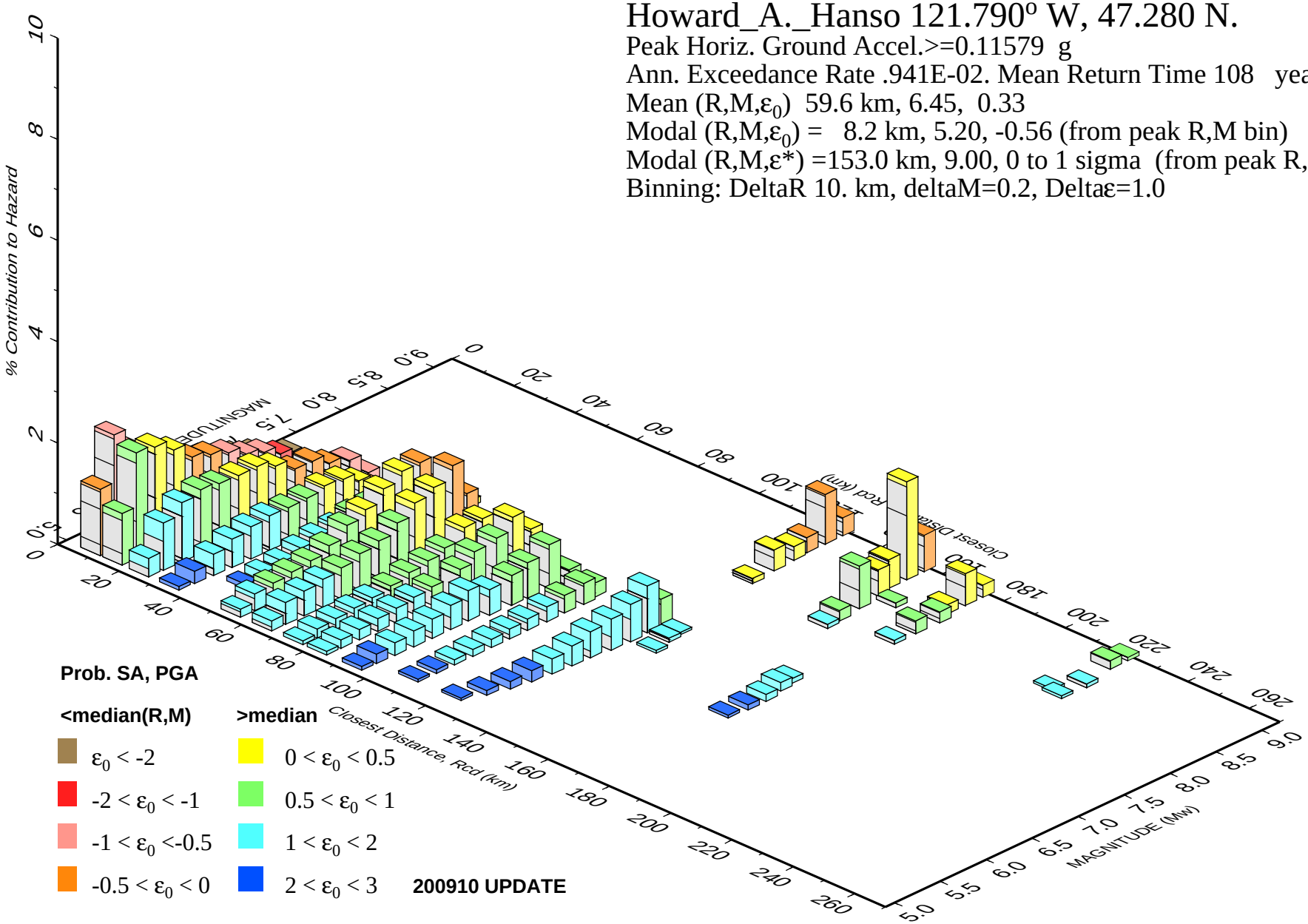

GMT 2013 Jul 22 19:04:35 **Distance (R), magnitude (M), epsilon (E0,E) deaggregation for a site on rock with average vs= 760. m/s top 30 m. USGS CGHT PSHA2008 UPDATE Bins with lt 0.05% contrib. omitted**

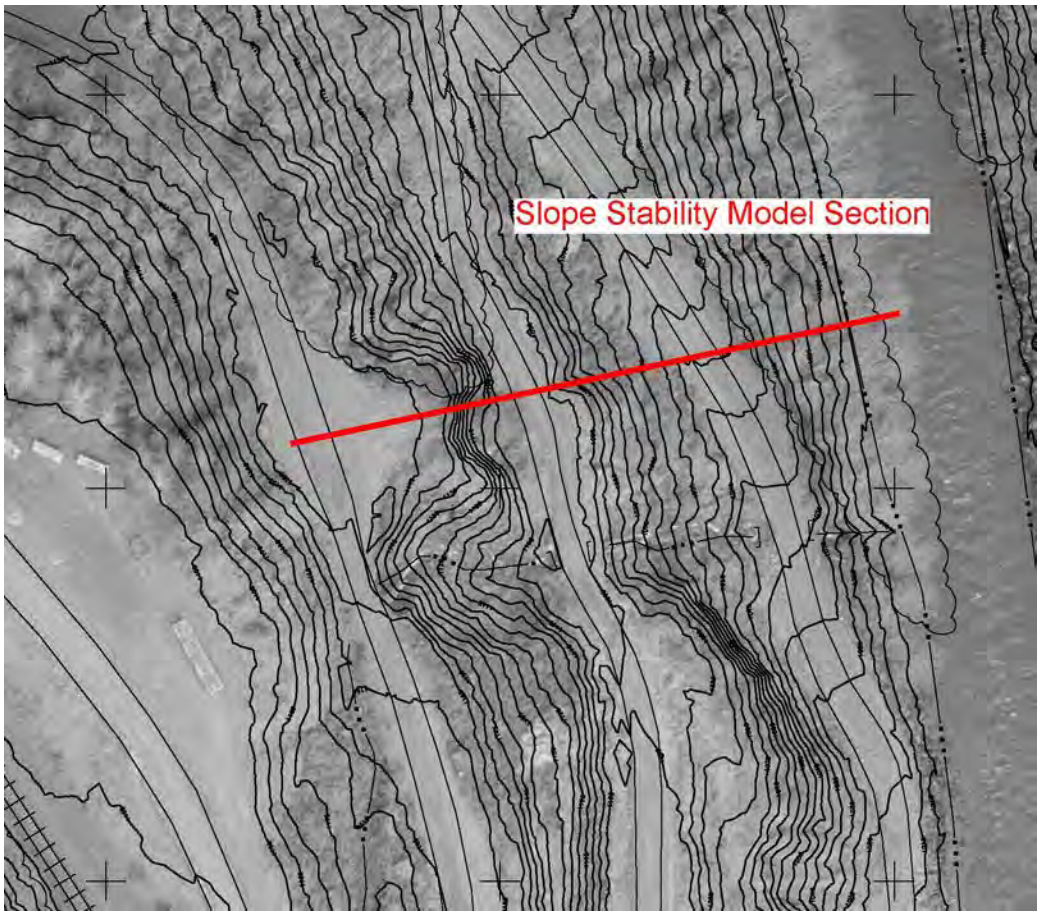

Figure 1 – Slope Stability Cross Section Location

Model parameters and assumptions:

Note: No explorations or sampling were conducted. All material properties are assumed. Factors of safety displayed on the cross sections are for comparison only and are not the actually factors of safety for the slope.

The model was setup with the assumption that the failure we are most interested in is shallow, surface failure (as observed at the site) rather than deep, global failure of the slope.

The material present at the site is highly altered rock which may poses properties of both soil and rock. The slope was modeled as a soil rather than rock using Mohr-Coulomb instead of Hoek-Brown for simplicity since all values were assumed no to lack of explorations.

Phi = 34° **Unit Weight: 145 pcf** **Cohesion: 0 psf**

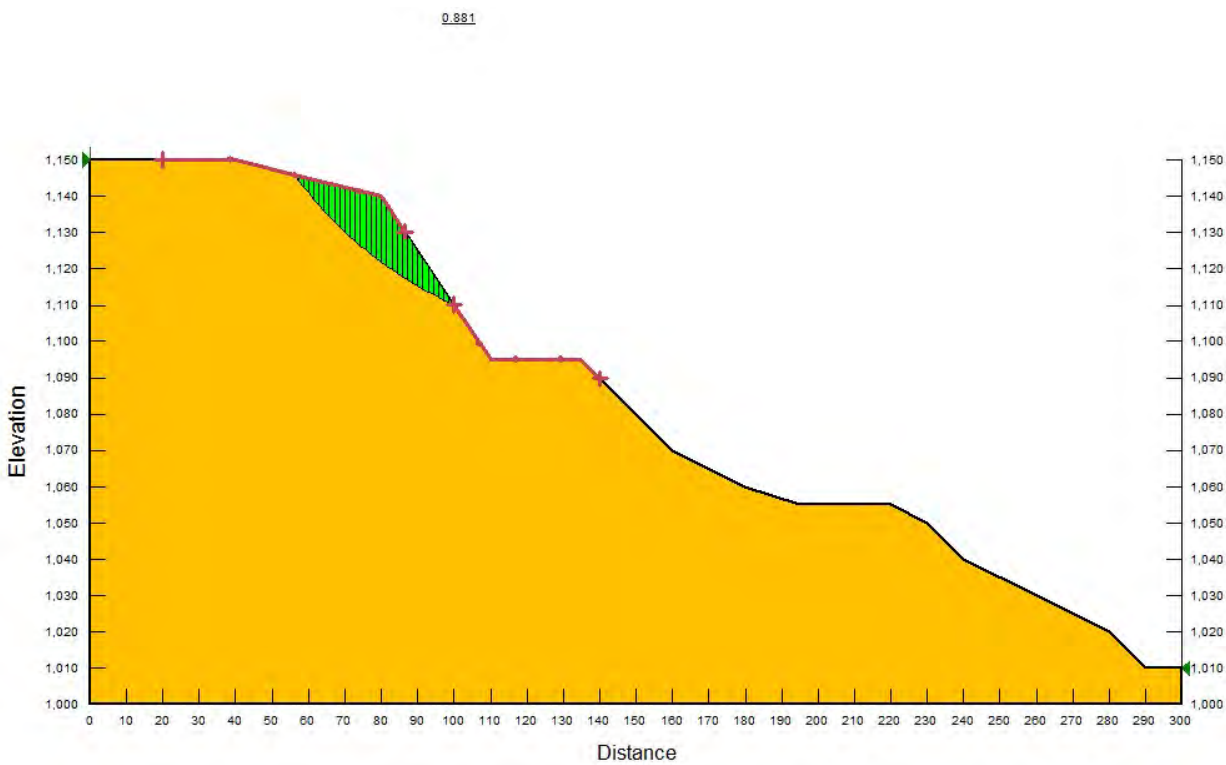

Figure 2 – Existing Conditions

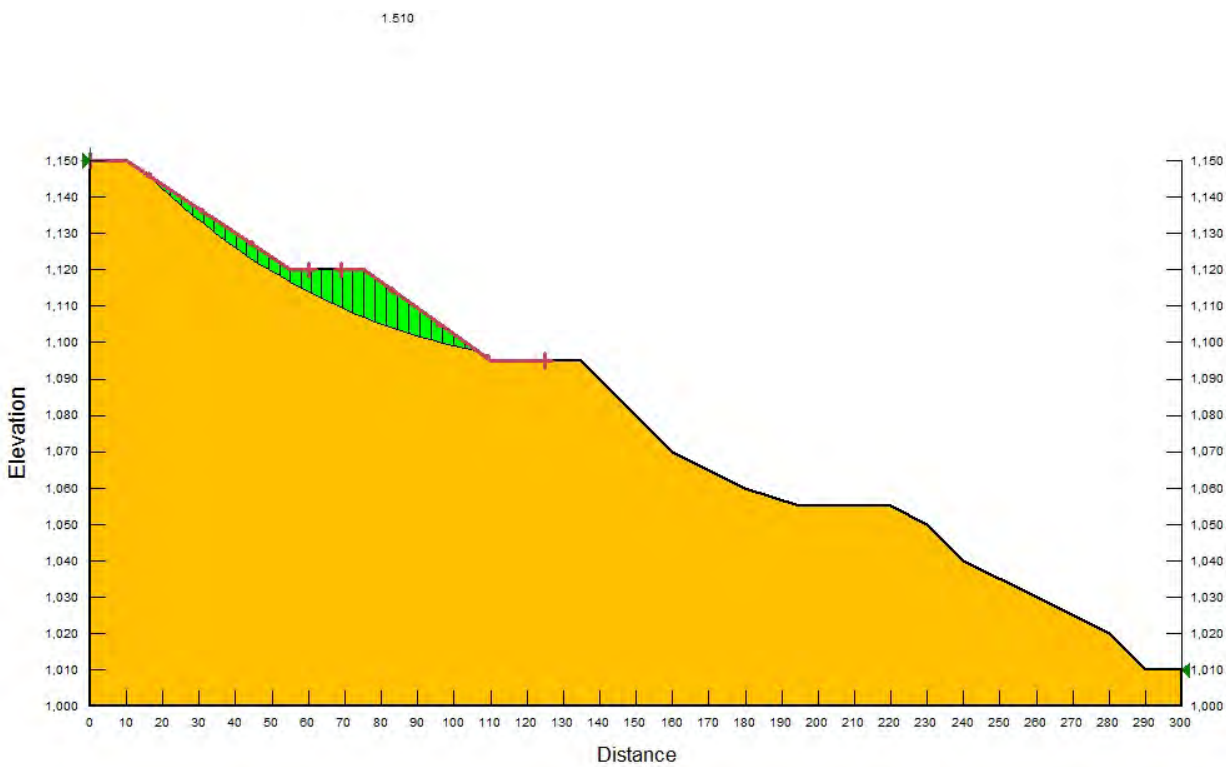

Figure 3 – Proposed Slope Configuration w/ Catch Bench

Rock Slope Stabilization Method Maxtrix

May-13

Mitigation Measures	Description/Purpose	Limitations	Applicable for HHD (Yes or No)	Why?
SLOPE GEOMETRY MODIFICATION				
Hand Scaling	Used to remove loose rock via hand tools such as pry bars or air bags (pneumatic pillows).	Effective on small areas and where rocks are small enough to be removed manually.	No	Excavation area and rocks are too large for hand tools.
Mechanical Scaling	Used to remove weak/loose rock via equipment such hydraulic hammers, long-reach excavators, cranes. For large rocks pneumatic pillows to splitters can be used to dislodge the rock.	Rock must be weak and loose. Mechanical fracturing may be necessary to break apart larger rocks. Crack blasting may also be used.	Yes	Rock is weathered and loose. Excavators should be able to reshape slope with the assistance of hydraulic hammers.
Trim Blasting	Used to remove overhanging faces and protruding knobs and to modify the slope angle to improve rockfall trajectory and slope stability. Requires drilling equipment and explosives.	Debris containment. Blasting close proximity to due dam.	Yes (probably not)	With proximity to the dam it is more difficult to blast. In addition, rock is likely weak enough to not require blasting.
REINFORCEMENT				
Internal Stabilization				
Rock Anchors/Bolts	Tensioned steel bars used to increase the normal force friction and shear resistance along discontinuities and potential failure surfaces.	Less suitable on slopes comprisiming small blocks and heavily weathered rock.	No*	Rock is highly altered. Reduction in strength is not necessarily due to fractures.
Rock Mass Bonding	Resin/epoxy injected into the rock mass through a borehole; travels along joints to add cohesion to discontinuities. Decreases number of rock bolts needed in a slope.	Joints/fractures should be greater than 2 mm. Should not be used as the only mitigation measure.	No*	Rock is highly altered. Reduction in strength is not necessarily due to fractures.
External Stabilzation				
Shotcrete	Pneumatically applied concrete. Used to halt the ongoing loss of support caused by erosion and raveling. Adds a small amount of structural support for small blocks.	Reduces slope drainage, so drainage needs to be installed via weep holes. Must be applied a minimum of 2 inches for freeze/thaw. Wire mesh needed to prevent cracking.	Yes (probably not)	There is a potential to be used near the drainage alignment to reduce erosion. Not likely to be used for entire slope due to cost.
Drainage Systems	Reduce water pressures within a slope using horizontal drains. Used in conjunction with other measures.	Difficult to quantify the need and verify the improvements achieved. May need periodic cleaning.	No	Better for large scale slope instability, where the failure plane is deeply seated.

*There is space for the slope to be stabilized through changing the geometry. No internal stabilization measures should be needed.

Appendix B

Civil Design Calculations

ENGINEERING DESIGN SHEET OFFICE SYMBOL:

PROJECT	COMPUTED BY	DATE: 6/4/13
HHD LEFT BANK DRAINAGE	K. MAY	SHEET: OF:
SUBJECT	CHECKED BY	
STORMWATER CALCULATIONS		PART:

RATIONAL METHOD REF: 2007 WSDOT HYDRAULIS MANUAL

$Q = CIA$

C = RUNOFF COEFFICIENT

I = RAINFALL INTENSITY (IN/HR)

$= \frac{m}{T_c^{\,n}}$

T_c = TIME OF CONCENTRATION (MIN)

$= \frac{L}{K\sqrt{S}}$

L = FLOW LENGTH (FT)

K = GROUND COVER COEFFICIENT

S = SLOPE (FT/FT)

A = AREA (Ac)

FROM FIG. 2-5.2 C = 0.20
FIG. 2-5.3 K = 150
FIG. 2-5.4A m = 7.88 ; n = 0.545 (50-YR EVENT)

FROM BASIN MAP L = 5000' S = 20% (ASSUMED)
FROM H&H A = 160 Ac

$T_c = \frac{5000'}{150\sqrt{0.2}} = 74.5$ MIN

$I = \frac{7.88}{74.5^{0.545}} = 0.75$ IN/HR (0.93)

$Q = (0.20)(0.75)(160)$
$= 24.0$ CFS (27 CFS)

Location	2-Year MRI		5-Year MRI		10-Year MRI		25-Year MRI		50-Year MRI		100-Year MRI	
	m	n	m	n	m	n	m	n	m	n	m	n
Aberdeen and Hoquiam	5.10	0.488	6.22	0.488	7.06	0.487	8.17	0.487	9.02	0.487	9.86	0.487
Bellingham	4.29	0.549	5.59	0.555	6.59	0.559	7.90	0.562	8.89	0.563	9.88	0.565
Bremerton	3.79	0.480	4.84	0.487	5.63	0.490	6.68	0.494	7.47	0.496	8.26	0.498
Centralia and Chehalis	3.63	0.506	4.85	0.518	5.76	0.524	7.00	0.530	7.92	0.533	8.86	0.537
Clarkston and Colfax	5.02	0.628	6.84	0.633	8.24	0.635	10.07	0.638	11.45		0.639	12.81	0.639
Colville	3.48	0.558	5.44	0.593	6.98	0.610	9.07	0.626	10.65		0.635	12.26	0.642
Ellensburg	2.89	0.590	5.18	0.631	7.00	0.649	9.43	0.664	11.30		0.672	13.18	0.678
Everett	3.69	0.556	5.20	0.570	6.31	0.575	7.83	0.582	8.96	0.585		10.07	0.586
Forks	4.19	0.410	5.12	0.412	5.84	0.413	6.76	0.414	7.47	0.415	8.18	0.416
Hoffstadt Cr. (SR 504)	3.96	0.448	5.21	0.462	6.16	0.469	7.44	0.476	8.41	0.480	9.38	0.484
Hoodsport	4.47	0.428	5.44	0.428	6.17	0.427	7.15	0.428	7.88	0.428	8.62	0.428
Kelso and Longview	4.25	0.507	5.50	0.515	6.45	0.509	7.74	0.524	8.70	0.526	9.67	0.529
Leavenworth	3.04	0.530	4.12	0.542	5.62	0.575	7.94	0.594	9.75	0.606		11.08	0.611
Metaline Falls	3.36	0.527	4.90	0.553	6.09	0.566	7.45	0.570	9.29	0.592		10.45	0.591
Moses Lake	2.61	0.583	5.05	0.634	6.99	0.655	9.58	0.671	11.61		0.681	13.63	0.688
Mt. Vernon	3.92	0.542	5.25	0.552	6.26	0.557	7.59	0.561	8.60	0.564	9.63	0.567
Naselle	4.57	0.432	5.67	0.441	6.14	0.432	7.47	0.443	8.05	0.440	8.91	0.436
Olympia	3.82	0.466	4.86	0.472	5.62	0.474	6.63	0.477	7.40	0.478	8.17	0.480
Omak	3.04	0.583	5.06	0.618	6.63	0.633	8.74	0.647	10.35		0.654	11.97	0.660
Pasco and Kennewick	2.89	0.590	5.18	0.631	7.00	0.649	9.43	0.664	11.30		0.672	13.18	0.678
Port Angeles	4.31	0.530	5.42	0.531	6.25	0.531	7.37	0.532	8.19	0.532	9.03	0.532
Poulsbo	3.83	0.506	4.98	0.513	5.85	0.516	7.00	0.519	7.86	0.521	8.74	0.523
Queets	4.26	0.422	5.18	0.423	5.87	0.423	6.79	0.423	7.48	0.423	8.18	0.424
Seattle	3.56	0.515	4.83	0.531	5.62	0.530	6.89	0.539	7.88	0.545	8.75		0.5454
Sequim	3.50	0.551	5.01	0.569	6.16	0.577	7.69	0.585	8.88	0.590		10.04	0.593
Snoqualmie Pass	3.61	0.417	4.81	0.435	6.56	0.459	7.72	0.459	8.78	0.461		10.21	0.476
Spokane	3.47	0.556	5.43	0.591	6.98	0.609	9.09	0.626	10.68		0.635	12.33	0.643
Stevens Pass	4.73	0.462	6.09	0.470	8.19	0.500	8.53	0.484	10.61		0.499	12.45	0.513
Tacoma	3.57	0.516	4.78	0.527	5.70	0.533	6.93	0.539	7.86	0.542	8.79	0.545
Vancouver	2.92	0.477	4.05	0.496	4.92	0.506	6.06	0.515	6.95	0.520	7.82	0.525
Walla Walla	3.33	0.569	5.54	0.609	7.30	0.627	9.67	0.645	11.45		0.653	13.28	0.660
Wenatchee	3.15	0.535	4.88	0.566	6.19	0.579	7.94	0.592	9.32	0.600		10.68	0.605
Yakima	3.86	0.608	5.86	0.633	7.37	0.644	9.40	0.654	10.93		0.659	12.47	0.663

Index to Rainfall Coefficients (English Units)

Figure 2-5.4A

Location	2-Year MRI		5-Year MRI		10-Year MRI		25-Year MRI		50-Year MRI		100-Year MRI	
	m	n	m	n	m	n	m	n	m	n	m	n
Aberdeen and Hoquiam	129	0.488	158	0.488	179	0.487	208	0.487	229	0.487	250	0.487
Bellingham	109	0.549	142	0.555	167	0.559	201	0.562	226	0.563	251	0.565
Bremerton	96	0.480	123	0.487	143	0.490	170	0.494	190	0.496	210	0.498
Centralia and Chehalis	92	0.506	123	0.518	146	0.524	178	0.530	201	0.533	225	0.537
Clarkston and Colfax	128	0.628	174	0.633	209	0.635	256	0.638	291	0.639	325	0.639
Colville	83	0.558	138	0.593	177	0.610	230	0.626	271	0.635	311	0.642
Ellensburg	73	0.590	132	0.631	179	0.649	240	0.664	287	0.672	335	0.678
Everett	94	0.556	132	0.570	160	0.575	199	0.582	228	0.585	256	0.586
Forks	106	0.410	130	0.412	148	0.413	172	0.414	190	0.415	208	0.416
Hoffstadt Cr. (SR 504)	101	0.448	132	0.462	156	0.469	189	0.476	214	0.480	238	0.484
Hoodsport	114	0.428	138	0.428	157	0.427	182	0.428	200	0.428	219	0.428
Kelso and Longview	108	0.507	140	0.515	164	0.519	197	0.524	221	0.526	246	0.529
Leavenworth	77	0.530	105	0.542	143	0.575	202	0.594	248	0.606	281	0.611
Metaline Falls	85	0.527	124	0.553	155	0.566	189	0.570	236	0.592	265	0.591
Moses Lake	66	0.583	128	0.634	178	0.655	243	0.671	295	0.681	346	0.688
Mt. Vernon	100	0.542	133	0.552	159	0.557	193	0.561	218	0.564	245	0.567
Naselle	116	0.432	144	0.441	156	0.432	190	0.443	204	0.440	226	0.436
Olympia	97	0.466	123	0.472	143	0.474	168	0.477	188	0.478	208	0.480
Omak	77	0.583	129	0.618	168	0.633	222	0.647	263	0.654	304	0.660
Pasco and Kennewick	73	0.590	132	0.631	178	0.649	240	0.664	287	0.672	335	0.678
Port Angeles	109	0.530	138	0.531	159	0.531	187	0.532	208	0.532	229	0.532
Poulsbo	97	0.506	126	0.513	149	0.516	178	0.519	200	0.521	222	0.523
Queets	108	0.422	132	0.423	149	0.423	172	0.423	190	0.423	208	0.424
Seattle	90	0.515	123	0.531	143	0.530	175	0.539	200	0.545	222	0.545
Sequim	89	0.551	127	0.569	156	0.577	195	0.585	226	0.590	255	0.593
Snoqualmie Pass	92	0.417	122	0.435	167	0.459	196	0.459	223	0.461	259	0.476
Spokane	88	0.556	138	0.591	177	0.609	231	0.626	271	0.635	313	643
Stevens Pass	120	0.462	155	0.470	208	0.500	217	0.484	269	0.499	316	513
Tacoma	91	0.516	121	0.527	145	0.533	176	0.539	200	0.542	223	545
Vancouver	74	0.477	103	0.496	125	0.506	154	0.515	177	0.520	199	0.525
Walla Walla	85	0.569	141	0.609	185	0.627	246	0.645	291	0.653	337	0.660
Wenatchee	80	0.535	124	0.566	157	0.579	202	0.592	237	0.600	271	0.605
Yakima	98	0.608	149	0.633	187	0.644	239	0.654	278	0.659	317	0.663

Index to Rainfall Coefficients (Metric Units)

Figure 2-5.4 B

2-5.4 Rainfall Intensity

After the appropriate storm frequency for the design has been determined (see Chapter 1) and the time of concentration has been calculated, the rainfall intensity can be calculated. Designers should never use a time of concentration that is less than 5 minutes for intensity calculations, even when the calculated time of concentration is less than 5 minutes. The 5-minute limit is based on two ideas:

1. Shorter times give unrealistic intensities. Many IDF curves are constructed from curve smoothing equations and not based on actual data collected at intervals shorter than 15 to 30 minutes. To make the curves shorter, involves extrapolation, which is not reliable.
2. It takes time for rainfall to generate into runoff within a defined basin, thus it would not be realistic to have less than 5 minutes for a time of concentration.

It should be noted that the rainfall intensity at any given time is the average of the most intense period enveloped by the time of concentration and is not the instantaneous rainfall. Equation 2-4 is the equation for calculating rainfall intensity.

$$I = \frac{m}{(T_C)^n} \quad (2\text{-}4)$$

Where: I = Rainfall intensity in inches per hour (millimeters per hour)
T_C = Time of concentration in minutes
m & n = Coefficents in dimensionless units (Figures 2-5.4A & 2-5.4B)

The coefficients (m and n) have been determined for all major cities for the 2-, 5-, 10-, 25-, 50-, and 100 year mean recurrence intervals (MRI). The coefficients listed are accurate from 5-minute durations to 1,440-minute durations (24 hours). These equations were developed from the 1973 National Oceanic and Atmospheric Administration Atlas 2, Precipitation-Frequency Atlas of the Western United States, Volume IX-Washington.

With the Region Hydraulic Engineers assistance, the designer should interpolate between the two or three nearest cities listed in the tables when working on a project that is in a location not listed on the table. If the designer must do an analysis with a T_c greater than 1,440 minutes, the rational method should not be used.

Type of Cover		K (English)	K (metric)
Forest with heavy ground cover		150	50
Minimum tillage cultivation		280	75
Short pasture grass or lawn		420	125
Nearly bare ground		600	200
Small roadside ditch w/grass		900	275
Paved area		1,200	375
Gutter flow	4 inch deep (100 mm)	1,500 450	
	6 inch deep (150 mm)	2,400 725	
	8 inch deep (200 mm)	3,100 950	
Storm Sewers	1 foot diam. (300 mm)	3,000 925	
18	inch diam. (450 mm)	3,900 1,20	0
	2 feet diam. (600 mm)	4,700 1,42	5
Open Channel Flow (n = .040) Narrow Channel (w/d =1)	1 foot deep (300 mm)	1,100 350	
	2 feet deep (600 mm)	1,800 550	
	4 feet deep (1.20 m)	2,800 850	
Open Channel Flow (n =.040) Wide Channel (w/d =9)	1 foot deep (300 mm)	2,000 600	
	2 feet deep (600 mm)	3,100 950	
	4 feet deep (1.20 m)	5,000 1,52	5

Ground Cover Coefficients

Figure 2-5.3

$$T_t = \frac{L}{K\sqrt{S}} = \frac{L^{1.5}}{K\sqrt{\Delta H}} \quad (2\text{-}2)$$

$$T_C = T_{t1} + T_{t2} + \ldots T_{tnz} \quad (2\text{-}3)$$

Where:

T_t = Travel time of flow segment in minutes

T_C = Time of concentration in minutes

L = Length of segment in feet (meters)

ΔH = Elevation change across segment in feet (meters)

K = Ground cover coefficient in feet (meters)

S = Slope of segment $\frac{\Delta H}{L}$ in feet per feet (meter per meter)

concentration is included in the rational method so that the designer can determine the proper rainfall intensity to apply across the basin. The intensity that should be used for design purposes is the highest intensity that will occur with the entire basin contributing flow to the location where the designer is interested in knowing the flow rate. It is important to note that this may be a much lower intensity than the absolute maximum intensity. The reason is that it often takes several minutes before the entire basin is contributing flow but the absolute maximum intensity lasts for a much shorter time so the rainfall intensity that creates the greatest runoff is less than the maximum by the time the entire basin is contributing flow.

Most drainage basins will consist of different types of ground covers and conveyance systems that flow must pass over or through. These are referred to as flow segments. It is common for a basin to have flow segments that are overland flow and flow segments that are open channel flow. Urban drainage basins often have flow segments that flow through a storm drainpipe in addition to the other two types. A travel time (the amount of time required for flow to move through a flow segment) must be computed for each flow segment. The time of concentration is equal to the sum of all the flow segment travel times.

For a few drainage areas, a unique situation occurs where the time of concentration that produces the largest amount of runoff is less than the time of concentration for the entire basin. This can occur when two or more subbasins have dramatically different types of cover (i.e., different runoff coefficients). The most common case would be a large paved area together with a long narrow strip of natural area. In this case, the designer should check the runoff produced by the paved area alone to determine if this scenario would cause a greater peak runoff rate than the peak runoff rate produced when both land segments are contributing flow. The scenario that produces the greatest runoff should be used, even if the entire basin is not contributing flow to this runoff.

The procedure for determining the time of concentration for overland flow was developed by the United States Natural Resources Conservation Service (formerly known as the Soil Conservation Service) and is described below. It is sensitive to slope, type of ground cover, and the size of channel. If the total time of concentration is less than 5 minutes, a minimum of five minutes should be used as the duration, see section 2-5.4 for details. The time of concentration can be calculated as in equations 2-2 and 2-3:

Type of Cover	Flat	Rolling 2%-10%	Hilly Over 10%
Pavement and Roofs	0.90	0.90	0.90
Earth Shoulders	0.50	0.50	0.50
Drives and Walks	0.75	0.80	0.85
Gravel Pavement	0.50	0.55	0.60
City Business Areas	0.80	0.85	0.85
Suburban Residential	0.25	0.35	0.40
Single Family Residential	0.30	0.40	0.50
Multi Units, Detached	0.40	0.50	0.60
Multi Units, Attached	0.60	0.65	0.70
Lawns, Very Sandy Soil	0.05	0.07	0.10
Lawns, Sandy Soil	0.10	0.15	0.20
Lawns, Heavy Soil	0.17	0.22	0.35
Grass Shoulders	0.25	0.25	0.25
Side Slopes, Earth	0.60	0.60	0.60
Side Slopes, Turf	0.30	0.30	0.30
Median Areas, Turf	0.25	0.30	0.30
Cultivated Land, Clay and Loam	0.50	0.55	0.60
Cultivated Land, Sand and Gravel	0.25	0.30	0.35
Industrial Areas, Light	0.50	0.70	0.80
Industrial Areas, Heavy	0.60	0.80	0.90
Parks and Cemeteries	0.10	0.15	0.25
Playgrounds 0.20		0.25	0.30
Woodland and Forests	0.10	0.15	0.20
Meadows and Pasture Land	0.25	0.30	0.35
Pasture with Frozen Ground	0.40	0.45	0.50
Unimproved Areas	0.10	0.20	0.30

Runoff Coefficients for the Rational Method — 10-Year Return Frequency

Figure 2-5.2

2-5.3 Time of Concentration

If rainfall were applied at a constant rate over a drainage basin, it would eventually produce a constant peak rate of runoff. The amount of time that passes from the moment that the constant rainfall begins to the moment that the constant rate of runoff begins is called the time of concentration. This is the time required for the surface runoff to flow from the most hydraulically remote part of the drainage basin to the location of concern.

Actual precipitation does not fall at a constant rate. A precipitation event will begin with small rainfall intensity then, sometimes very quickly, build to peak intensity and eventually taper down to no rainfall. Because rainfall intensity is variable, the time of

SR Project		
Calculated By		Date

EQUATIONS	LEGEND				
$T_c = \frac{L}{K\sqrt{S}} = \frac{L^{1.5}}{K\sqrt{\Delta H}}$	Q	= Flow	T_c	=	Time of concentration
$I = \frac{m}{(T_C)^n}$	L	= Length of drainage basin	m & n	=	Rainfall coefficients
$Q = \frac{CIA}{K_C}$	S	= Average slope	K_c	=	Conversion
	K	= Ground cover coefficient	C	=	Runoff coefficient
	ΔH	= Elevation change of basin	A	=	Drainage area

Description Of Area	MRI	L	ΔH	S	K	T_c	Rainfall Coeff		K_c	C	I	A	Q
							m	n					

Hydrology by the Rational Method

Figure 2-5.1

(WSDOT Form 235-009)

Below is the web link for electronic spreadsheet

(http://www.wsdot.wa.gov/eesc/design/hydraulics/programs/hydrology.xls)

When several subareas within a drainage basin have different runoff coefficients, the rational formula can be modified as follows:

$$Q = \frac{I\Sigma CA}{K_C} \quad (2\text{-}1a)$$

Where: $\sum CA = C_1 \times A_1 + C_2 \times A_2 + \ldots C_n \times A_n$

Hydrologic information calculated by the rational method should be submitted on DOT Form 235-009 (see Figure 2-5.1). This format contains all the required input information as well as the resulting discharge. The description of each area should be identified by name or stationing so that the reviewer may easily locate each area.

2-5.2 Runoff Coefficients

The runoff coefficient "C" represents the percentage of rainfall that becomes runoff. The rational method implies that this ratio is fixed for a given drainage basin. In reality, the coefficient may vary with respect to prior wetting and seasonal conditions. The use of an average coefficient for various surface types is quite common and it is assumed to stay constant through the duration of the rainstorm.

When considering frozen ground, designers should review section 2-4.2 number 3 of this manual.

In a high growth rate area, runoff factors should be projected that will be characteristic of developed conditions 20 years after construction of the project. Even though local storm water practices (where they exist) may reduce potential increases in runoff, prudent engineering should still make allowances for predictable growth patterns.

The coefficients in Figure 2-5.2 are applicable for peak storms of 10-year frequency. Less frequent, higher intensity storms will require the use of higher coefficients because infiltration and other losses have a proportionally smaller effect on runoff. Generally, when designing for a 25-year frequency, the coefficient should be increased by 10 percent; when designing for a 50-year frequency, the coefficient should be increased by 20 percent; and when designing for a 100-year frequency, the coefficient should be increased by 25 percent. The runoff coefficient should not be increased above 0.95, unless approved by the Regional Hydraulics Engineer. Higher values may be appropriate for steeply sloped areas and/or longer return periods, because in these cases infiltration and other losses have a proportionally smaller effect on runoff.

2. Retention Ponds – When retention ponds are located near the roadway, the emergency spillway should be located outside of any snow storage areas that could block overflow passage, or an alternative flow route should be designated.

3. Frozen Ground - Frozen Ground coupled with snowmelt or rain on snow can cause unusually adverse conditions. These combined sources of runoff are generally reflected in the USGS regression equations as well as in the historic gauge records. No corrections or adjustments typically need to be made to these hydrology methods for frozen ground or snowmelt. For smaller basins, the SBUH and Rational methods are typically used to determine peak volume and peak runoff rates. The CN value for the SBUH method, and the runoff coefficient for the Rational method do not need to be increased to account for frozen ground in snowy or frozen areas as consideration has been given to this in the normal precipitation amounts and in deriving the snowmelt equation.

2-5 The Rational Method

2-5.1 General

The rational method is used to predict peak flows for small drainage areas, which can be either natural or developed. The rational method can be used for culvert design, pavement drainage design, storm drain design, and some eastern Washington stormwater facility design. The greatest accuracy is obtained for areas smaller than 100 acres (40 hectares) and for developed conditions with large areas of impervious surface (e.g., pavement, roof tops, etc.). Basins up to 1,000 acres (400 hectares) may be evaluated using the rational formula; however, results for large basins often do not properly account for effects of infiltration and thus are less accurate. Designers should never perform a rational method analysis on a basin that is larger than the lower limit specified for the USGS regression equations since the USGS regression equations will yield a more accurate flow prediction for that size of basin.

The formula for the rational method is:

$$Q = \frac{CIA}{K_C} \quad (2\text{-}1)$$

Where:
- Q = Runoff in cubic feet per second (cubic meters per second)
- C = Runoff coefficient in dimensionless units
- I = Rainfall intensity in inches per hour (millimeters per hour)
- A = Drainage area in acres (hectares)
- K_C = Conversion factor of 1 for English (360 for metric units)

2-5.5 Rational Formula Example

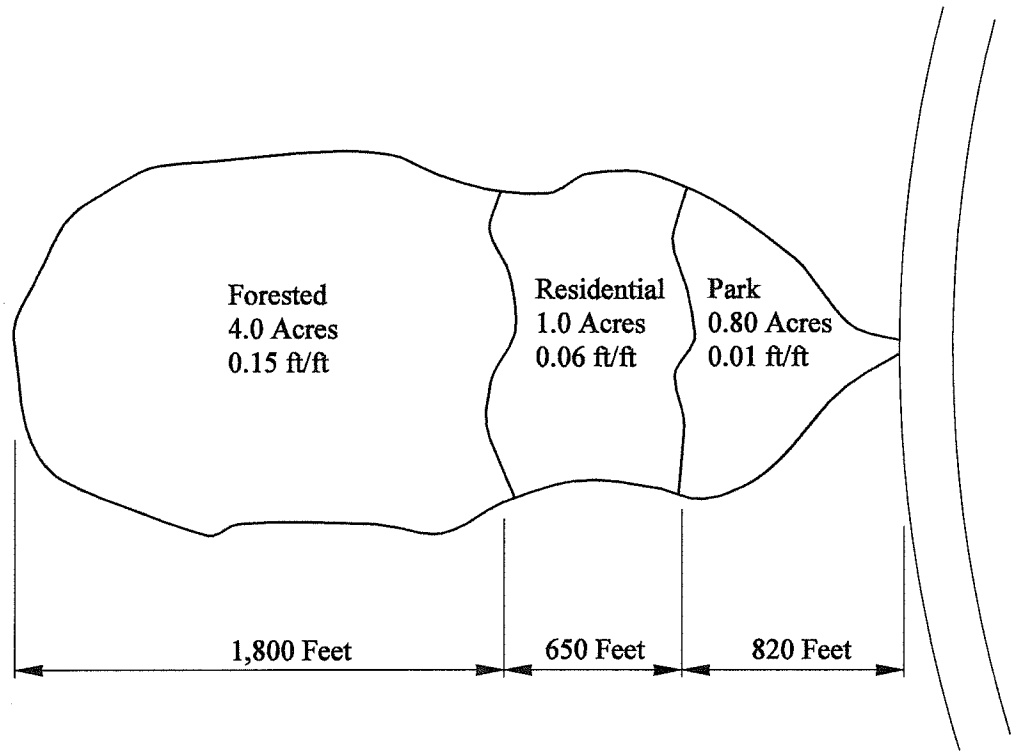

Compute the 25-year runoff for the Spokane watershed shown above. Three types of flow conditions exist from the highest point in the watershed to the outlet. The upper portion is 4.0 acres of forest cover with an average slope of 0.15 ft/ft. The middle portion is 1.0 acres of single family residential with a slope of 0.06 ft/ft and primarily lawns. The lower portion is a 0.8 acres park with 18-inch storm sewers with a general slope of 0.01 ft/ft.

$$T_c = \sum \frac{L}{K\sqrt{S}} = \frac{1800}{150\sqrt{0.15}} + \frac{650}{420\sqrt{0.06}} + \frac{820}{3{,}900\sqrt{0.01}}$$

$$T_c = 31\text{ min} + 6\text{ min} + 2\text{ min} = 39\text{ min}$$

$$I = \frac{m}{(T_c)^n} = \frac{9.09}{(39)^{0.626}} = 0.93\frac{\text{in}}{\text{hr}}$$

$$\sum CA = 0.22(4.0\text{ acres}) + 0.44(1.0\text{ acres}) + 0.11(0.8\text{ acres}) = 1.4\text{ acres}$$

$$Q = \frac{I\left(\sum CA\right)}{K_c} = \frac{(0.93)(1.4)}{1} = 1.31\text{cfs}$$

FIGURE 3.2.1.C 25-YEAR 24-HOUR ISOPLUVIALS

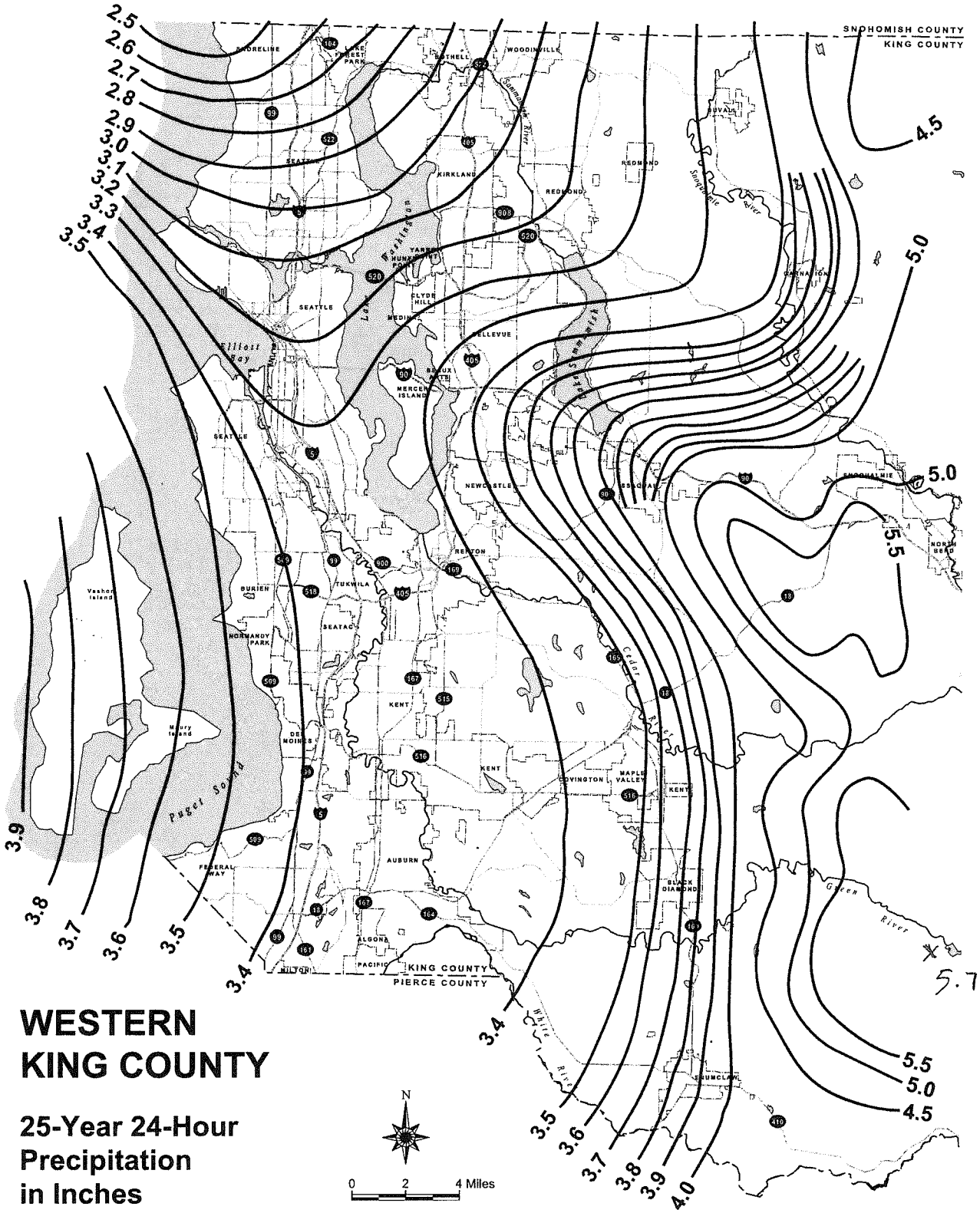

FIGURE 3.2.1.D 100-YEAR 24-HOUR ISOPLUVIALS

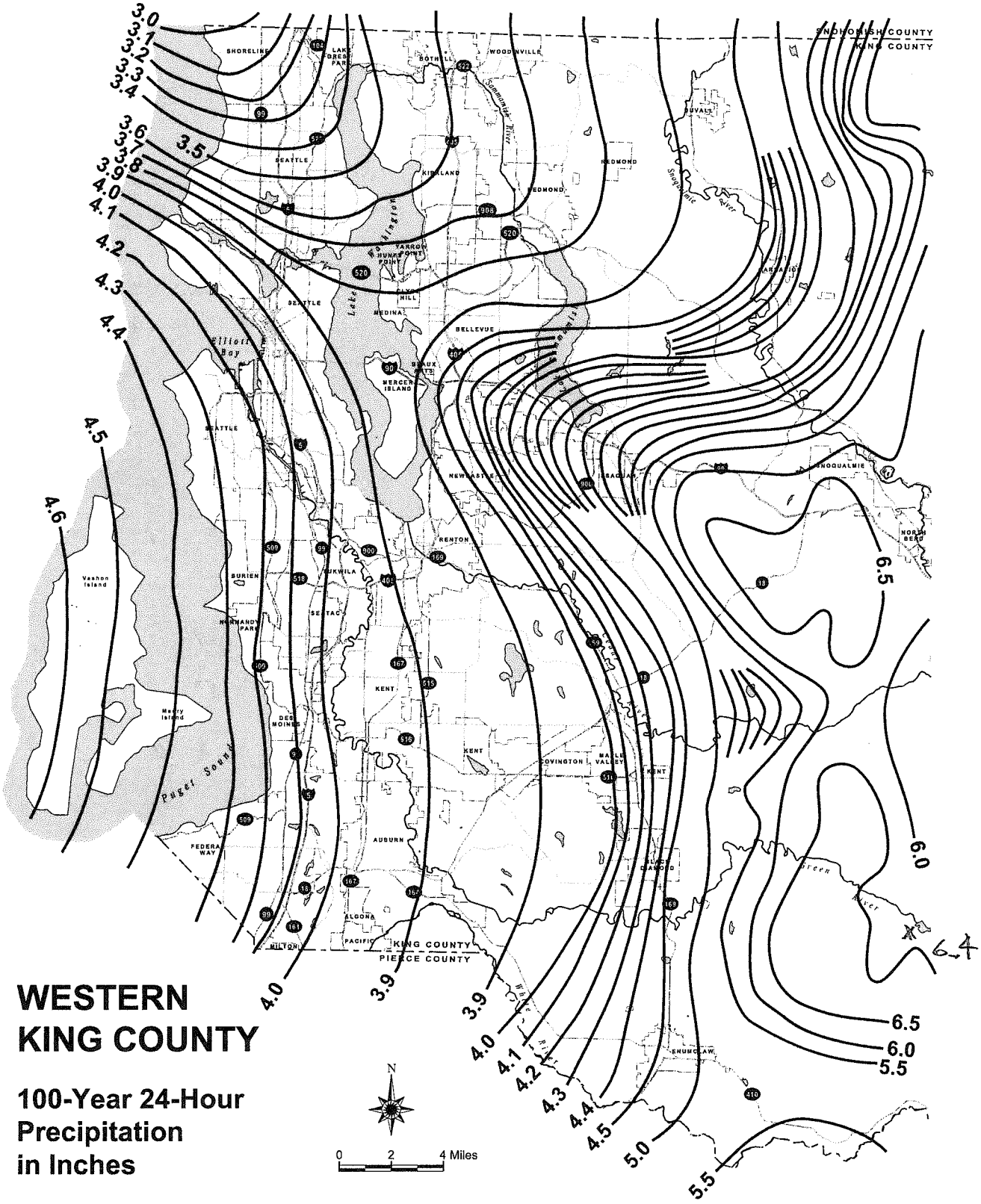

PIPE @ ½ % CFS

5' DIA CMP 99.75
42" ST 71.14
24" ST 16.00
24" CMP 8.66

A B, Forest, Steep	160
Pervious Total	160
Impervious Land Use	Acres
Impervious Total	0
Basin Total	160

Element Flows To:
Surface Interflow Groundwater

ANALYSIS RESULTS

Stream Protection Duration

Predeveloped Landuse Totals for POC #1
Total Pervious Area:160
Total Impervious Area:0

Mitigated Landuse Totals for POC #1
Total Pervious Area:160
Total Impervious Area:0

Flow Frequency Return Periods for Predeveloped. POC #1

Return Period	Flow(cfs)
2 year	9.746497
5 year	26.599737
10 year	42.935298
25 year	69.17423
50 year	92.457442
100 year	118.621257

Flow Frequency Return Periods for Mitigated. POC #1

Return Period	Flow(cfs)
2 year	9.746497
5 year	26.599737
10 year	42.935298
25 year	69.17423
50 year	92.457442
100 year	118.621257

Stream Protection Duration

$Q = CIA$

$= (0.2)(0.75)(160)$

$= 24.05$ cm

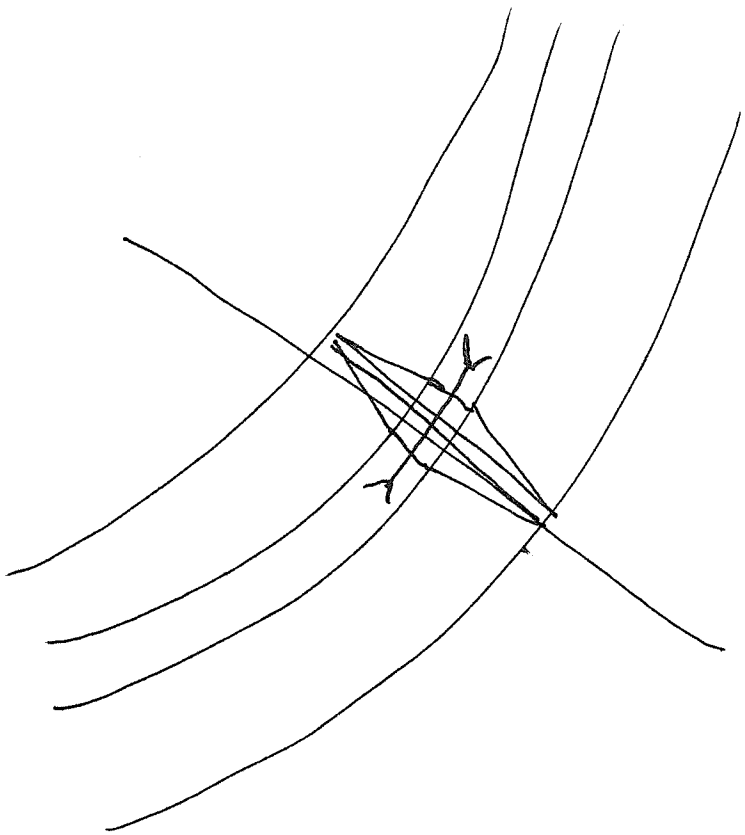

$C = 0.20$

$I = \frac{m}{T_c^{\,n}}$

$A = 160$

$m = 7.88$

$n = 0.515$

$I = \frac{7.88}{10^{0.515}}$

$I = 2.24$

$T_c = \frac{L}{K\sqrt{S}}$ $\quad K = 150$

$L = 5000'$

$S = 20\%$

$T_c = \frac{5000}{150\sqrt{0.2}} = 74 \rightarrow I = 0.75$

HYDROLOGY BY RATIONAL FORMULA

This spreadsheet calculates runoff rate and volume using the rational method. Enter the data in the grey shaded areas only.

Project Name: **HHD Left Bank Drainage**
Project Number: PN 384734

Designed By: Diana Jones
Date: 8/12/2013

Q = Flow (cfs or m^3/s)
L = Length of drainage basin (ft or m)
S = Average slope (ft/ft, m/m)
K = Ground cover coeeficient (ft/min or m/min)
I = Rainfall intensity (in/hr or mm/hr)

T_c = time of concentration (min)
m & n = Rainfall coefficients
K_c = Conversion factor (1 for English, 360 for Metric)
C = Runoff coefficient
A = Drainage area (acres or ha)

Description of Area	MRI	L (ft)	S (ft/ft)	K (ft/min)	T_c (min)	Rainfall Coefficients		K_c	C	I (in/hr)	A (ac)	Q (cfs)
						m	n					
North Culvert Drainage Basin	10-year	213	0.305	150	5.00	6.56	0.459	1	0.2	3.13	2.66	1.67
North Culvert Drainage Basin	25-year	213	0.305	150	5.00	7.72	0.459	1	0.22	3.69	2.66	2.16

U.S. ARMY CORPS OF ENGINEERS OFFICE SYMBOL:

PROJECT:	COMPUTED BY:	DATE: 8/12/2013
HHD LEFT BANK DRAINAGE	DFJ	SHT. OF
SUBJECT:	CHECKED BY:	PART:
Culvert Sizing — 10-yr. Flow	KSM	

* Flow rate computed using Rational Formula spreadsheet.

$$Q_{10} = \frac{1.49}{n} R^{2/3} S^{1/2} A$$

$Q_{10} = 1.67$ cfs

$S = 2\%$

$n = 0.013$

$$R = \frac{A}{P}$$

$$A = \frac{\pi d^2}{4}$$

$$P = \pi \cdot d$$

$$R = \frac{\frac{\cancel{\pi} d^{\cancel{2}}}{4}}{\cancel{\pi} \cancel{d}} = \frac{d}{4}$$

$$1.67 = \frac{1.49}{0.013} \left(\frac{d}{4}\right)^{2/3} (.02)^{1/2} \left(\frac{\pi d^2}{4}\right)$$

$$1.67 = (114.62)\left(\frac{d^{2/3}}{2.52}\right)(0.1414)(0.785 d^2)$$

$$d^{8/3} = 0.3306$$

$$d = 0.66 \text{ ft} \approx 8 \text{ in.}$$

U.S. ARMY CORPS OF ENGINEERS OFFICE SYMBOL:

PROJECT:	COMPUTED BY:	DATE: 8/12/2013
HHD LEFT BANK DRAINAGE	DFJ	SHT. OF
SUBJECT:	CHECKED BY:	PART:
Culvert Sizing – 25-yr. Flow	KSM	

* Flow rate computed using Rational Formula Spreadsheet.

$$Q_{25} = \frac{1.49}{n} R^{2/3} S^{1/2} A$$

$Q_{25} = 2.16$ cfs

$S = 2\%$

$n = 0.013$

$$R = \frac{A}{P}$$

$$A = \frac{\pi d^2}{4}$$

$$P = \pi d$$

$$R = \frac{\frac{\cancel{\pi} d^{\cancel{2}}}{4}}{\cancel{\pi} \cancel{d}} = \frac{d}{4}$$

$$2.16 = \frac{1.49}{0.013}\left(\frac{d}{4}\right)^{2/3}(.02)^{1/2}\left(\frac{\pi d^2}{4}\right)$$

$$2.16 = (114.615)\left(\frac{d^{2/3}}{2.52}\right)(.1414)(.7854 d^2)$$

$$d^{8/3} = 0.4276$$

$$d = 0.73 \text{ ft} \approx 9 \text{ in.}$$

HHD Left Bank - 10-yearr Flow minimum Diameter

Project Description

Friction Method	Manning Formula
Solve For	Full Flow Diameter

Input Data

Roughness Coefficient	0.013	
Channel Slope	0.02000	ft/ft
Normal Depth	0.66	ft
Diameter	0.66	ft
Discharge	1.67	ft^3/s

Results

Diameter	0.66	ft
Normal Depth	0.66	ft
Flow Area	0.34	ft^2
Wetted Perimeter	2.08	ft
Hydraulic Radius	0.17	ft
Top Width	0.00	ft
Critical Depth	0.59	ft
Percent Full	100.0	%
Critical Slope	0.01759	ft/ft
Velocity	4.87	ft/s
Velocity Head	0.37	ft
Specific Energy	1.03	ft
Froude Number	0.00	
Maximum Discharge	1.80	ft^3/s
Discharge Full	1.67	ft^3/s
Slope Full	0.01998	ft/ft
Flow Type	SubCritical	

GVF Input Data

Downstream Depth	0.00	ft
Length	0.00	ft
Number Of Steps	0	

GVF Output Data

Upstream Depth	0.00	ft
Profile Description		
Profile Headloss	0.00	ft
Average End Depth Over Rise	0.00	%

HHD Left Bank - 10-yearr Flow minimum Diameter

GVF Output Data

Normal Depth Over Rise	100.00	%
Downstream Velocity	Infinity	ft/s
Upstream Velocity	Infinity	ft/s
Normal Depth	0.66	ft
Critical Depth	0.59	ft
Channel Slope	0.02000	ft/ft
Critical Slope	0.01759	ft/ft

HHD Left Bank - 25-year Flow, min Pipe Diameter

Project Description

Friction Method	Manning Formula
Solve For	Full Flow Diameter

Input Data

Roughness Coefficient	0.013	
Channel Slope	0.02000	ft/ft
Normal Depth	0.73	ft
Diameter	0.73	ft
Discharge	2.16	ft^3/s

Results

Diameter	0.73	ft
Normal Depth	0.73	ft
Flow Area	0.42	ft^2
Wetted Perimeter	2.29	ft
Hydraulic Radius	0.18	ft
Top Width	0.00	ft
Critical Depth	0.66	ft
Percent Full	100.0	%
Critical Slope	0.01754	ft/ft
Velocity	5.19	ft/s
Velocity Head	0.42	ft
Specific Energy	1.15	ft
Froude Number	0.00	
Maximum Discharge	2.32	ft^3/s
Discharge Full	2.16	ft^3/s
Slope Full	0.02000	ft/ft
Flow Type	SubCritical	

GVF Input Data

Downstream Depth	0.00	ft
Length	0.00	ft
Number Of Steps	0	

GVF Output Data

Upstream Depth	0.00	ft
Profile Description		
Profile Headloss	0.00	ft
Average End Depth Over Rise	0.00	%

HHD Left Bank - 25-year Flow, min Pipe Diameter

GVF Output Data

Normal Depth Over Rise	100.00	%
Downstream Velocity	Infinity	ft/s
Upstream Velocity	Infinity	ft/s
Normal Depth	0.73	ft
Critical Depth	0.66	ft
Channel Slope	0.02000	ft/ft
Critical Slope	0.01754	ft/ft

Triangle Volume Report

Report Created: 8/22/2013
Time: 10:55am

Mode: Entire Surface
Input Grid Factor: 1.000000

Original Surface:	**HAHD2lidarmergegrid**
Description:	aeerometric-KC lidar merge gridded
Preference:	Default
Type:	Existing
Design Surface:	**HHD ROAD ALIGN_DFJ**
Description:	
Preference:	Default
Type:	Existing
Cut Factor:	1.00
Fill Factor:	1.00

Cut:	176043.0 cu ft
Fill:	41008.8 cu ft
Net:	135034.1 cu ft

Cut:	6520.1 cu yd
Fill:	1518.8 cu yd
Net:	5001.3 cu yd

Howard A. Hanson Dam
Additional Water Storage Project

Section 902 Post Authorization Change Validation Study – Fish Passage
King County, Washington

APPENDIX B-5

STRUCTRUAL

Final Integrated Validation Report and

Supplemental Environmental Impact Statement

US Army Corps of Engineers
Seattle District

TACOMA POWER
TACOMA WATER
TACOMA RAIL
TACOMA PUBLIC UTILITIES

Contents

B-5.1 Tower Stability Analysis

B-5.2 Bulkhead Design Calculations

B-5.3 Outlet Works Wall Design Calculations

B-5.4 Trashrack Design Calculations

Sliding stability check Long Direction

Unusual Load Case OBE

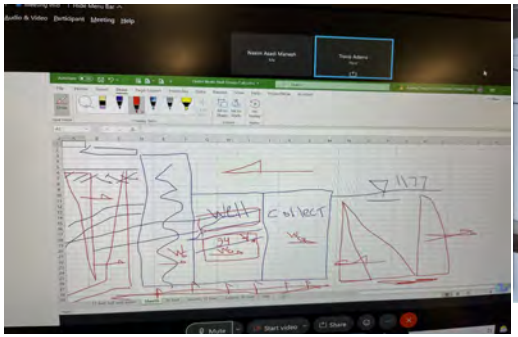

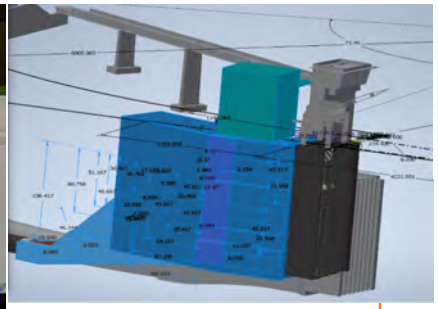

b. Analytical Methods. Several analytical methods are available to evaluate the dynamic response of structures during earthquakes: seismic coefficient, response spectrum, and time-history. These methods are discussed in reference ER 1110-2-1806. The current state-of-the-art method uses linear-elastic and nonlinear finite element time history analysis procedures, which account for the dynamic interaction between the structure, foundation, soil, and water. The seismic coefficient method, although it fails to account for the true dynamic characteristics of the structure-water-soil system, is accepted as a semiempirical method for determining if seismic forces control the design or evaluation, and to decide if dynamic analyses should be undertaken. The information in the following paragraphs describes the differences between the seismic coefficient method and dynamic analysis methods. Figure 4-2 illustrates the differences in the inertial and hydrodynamic earthquake loads obtained by the two different methods. The seismic coefficient used for the preliminary seismic stability evaluation of concrete hydraulic structures should be equal to 2/3 the effective peak ground acceleration (EPGA) expressed as a decimal fraction of the acceleration of gravity. The EPGA can be obtained by dividing the 0.30 second spectral acceleration, for the return period representing the design earthquake, by a factor of 2.5. The 0.30 second spectral acceleration is obtained from the spectral acceleration maps in Appendix D of ER 1110-2-1806.

Assume water is to the top of the structure during an earthquake	1181	
Foundation Elevation	1050	Tower Base
Unit weight of the water	62.4	lb/cubic ft
Total Height of the tower	**131**	ft
Height of the Tower submerged in the water	**131**	ft
Width of the structure	**41.667**	ft
Submerged Unit weight of the Soil	**67.6**	**lb/cubic ft**
Ka	**0.301**	
Driving Soil Reaction From Left	**7,274,690.91**	**lbs**
Driving Water Reaction From Left	**22,311,084.74**	**lbs**
Driving Total water+Soil Reaction From Left	**29,585,775.65**	**lbs**

Cohesion	**30**	psi	
Area of bottom of the structure	**6421**	ft^2	
	924624	in^2	
cL	**27738720**	lb	Resisting
water side of tower			
Water pressure	**22,311,084.74**	**lbs**	**Resisting**
Westergad Component	**1,960,028.79**	**lbs**	Reduced Resisting Force
Friction between structure and rock	**11,318,186.63**	**lbs**	Resisting (Weight-Uplift)*0.3 Friction
F.S	**1.51**		Cohesion adjusted until the FS is greater than 1.5

Seismic Soil pressure is an excited mass of soil	2/3 PGA	
2/3 MDE PGA	**0.0753**	
Seismic Soil Reaction	**3,639,762.30**	**lbs**
Structure seismic Driving Force	**6,104,458**	**lbs**

a. Behavior of Backfills.

(1) Non-Yielding Backfills. For low intensity ground motions the backfill material may respond within the range of linear elastic deformations. Walls with non-yielding backfills can be expected to have dynamic soil pressures greater than those predicted by the Mononobe-Okabe method. The dynamic soil pressures and associated forces in the backfill may be analyzed as an elastic response using Wood's method as described in ITL 92-11 (Ebeling and Morrision, 1992). A reasonable estimate for determining the additional lateral seismic soil force against a soil retaining structure, for non-yielding backfill conditions, can be determined as

$$F_{sr} = \gamma h^2 k_h$$

where: F_{sr} = Lateral seismic force representing dynamic soil pressure effects

γ = Unit weight of soil. Use moist or submerged unit weight when all soil is above or below the water table. For partially submerged soils the unit weight shall be proportioned by a weighted average.

h = Height of backfill

k_h = Effective peak ground acceleration, expressed as a decimal fraction of the acceleration of gravity

The seismic component of the total soil force F_{sr} is assumed to act at a distance of 0.63 h above the base of the wall. This force must be combined with the structure lateral inertial force, and if water is present, hydrodynamic seismic forces to obtain the total seismic force on the wall. Evaluation of a wall with non-yielding backfill for the aforementioned seismic forces is illustrated by Example 32 of ITL-92-11 (Ebeling and Morrison, 1992). The various seismic forces described above must be combined with static soil pressure forces and static water pressure forces to get the total force on the wall. Soil retaining structures not meeting stability criteria using the preliminary screening method should be evaluated using refined analysis techniques described in ITL-92-11 (Ebeling and Morrison, 1992).

EM 1110-2-2100 (assuming a per-foot analysis)

3-7. Factors of Safety for Sliding

Analysis of sliding stability is discussed in detail in Chapter 2 and Chapter 5. A factor of safety is required in sliding analyses to provide a suitable margin of safety between the loads that can cause instability and the strength of the materials along potential failure planes that can be mobilized to prevent instability. The factor of safety for sliding is defined by equation 3-1. The required factors of safety for sliding stability for *critical* structures and for *normal* structures are presented in Tables 3-2 and 3-3, respectively.

$$FS_s = \frac{N \tan\phi + cL}{T} \qquad (3\text{-}1)$$

where

N = force acting normal to the sliding failure plane under the structural wedge.
ϕ = angle of internal friction of the foundation material under the structural wedge.
c = cohesive strength of the foundation material under the structural wedge.
L = length of the structural wedge in contact with the foundation.
T = shear force acting parallel to the base of the structural wedge.

Table 3-3 Required Factors of Safety for Sliding - Normal Structures

	Load Condition Categories		
Site Information Category	**Usual**	**Unusual**	**Extreme**
Well Defined	1.4	1.2	1.1
Ordinary	1.5	1.3	1.1
Limited	3.0	2.6	2.2

TanPhi for Concrete founded on rock is minimum 0.3
Cohesion is the concrete to rock bond which would be controlled by the shear strength of the concrete. Limit this value to 10% of the compression strength of concrete or 30psi
T is the summation of all driving forces
N is the summation of all vertical resisting forces, which is the total weight of the structure minus the uplift force

Sliding stability check Long Direction

Extreme Load Case - MDE

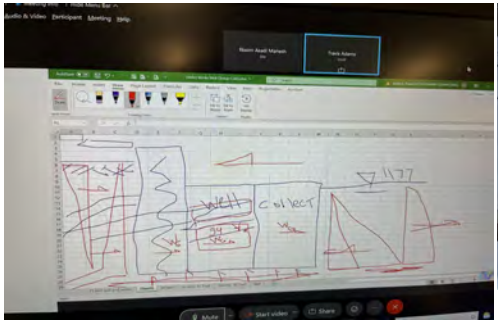

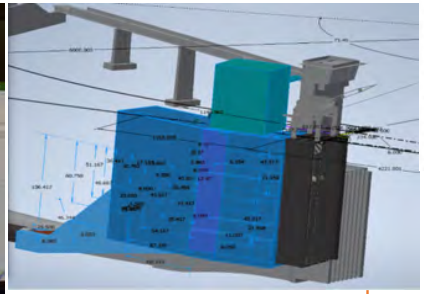

b. Analytical Methods. Several analytical methods are available to evaluate the dynamic response of structures during earthquakes: seismic coefficient, response spectrum, and time-history. These methods are discussed in reference ER 1110-2-1806. The current state-of-the-art method uses linear-elastic and nonlinear finite element time history analysis procedures, which account for the dynamic interaction between the structure, foundation, soil, and water. The seismic coefficient method, although it fails to account for the true dynamic characteristics of the structure-water-soil system, is accepted as a semiempirical method for determining if seismic forces control the design or evaluation, and to decide if dynamic analyses should be undertaken. The information in the following paragraphs describes the differences between the seismic coefficient method and dynamic analysis methods. Figure 4-2 illustrates the differences in the inertial and hydrodynamic earthquake loads obtained by the two different methods. The seismic coefficient used for the preliminary seismic stability evaluation of concrete hydraulic structures should be equal to 2/3 the effective peak ground acceleration (EPGA) expressed as a decimal fraction of the acceleration of gravity. The EPGA can be obtained by dividing the 0.30 second spectral acceleration, for the return period representing the design earthquake, by a factor of 2.5. The 0.30 second spectral acceleration is obtained from the spectral acceleration maps in Appendix D of ER 1110-2-1806.

Assume water is to the top of the structure during an earthquake	1181	
Foundation Elevation	1050	Tower Base
Unit weight of the water	62.4	lb/cubic ft
Total Height of the tower	**131**	ft
Height of the Tower submerged in the water	**131**	ft
Width of the structure	**41.667**	ft
Submerged Unit weight of the Soil	**67.6**	**lb/cubic ft**
Ka	**0.301**	
Driving Soil Reaction From Left	**7,274,690.91**	**lbs**
Driving Water Reaction From Left	**22,311,084.74**	**lbs**
Driving Total water+Soil Reaction From Left	**29,585,775.65**	**lbs**

Cohesion	**35**	psi	
Area of bottom of the structure	**6421**	ft^2	
	924624	in^2	
cL	**32361840**	lb	Resisting
water side of tower			
Water pressure	**22,311,084.74**	**lbs**	**Resisting**
Westergad Component	**5,104,352.28**	**lbs**	Reduced Resisting Force
Friction between structure and rock	**11,318,186.63**	**lbs**	Resisting (Weight-Uplift)*0.3 Friction
F.S	**1.11**		Cohesion adjusted until the FS is greater than 1.1

Seismic Soil pressure is an excited mass of soil	2/3 PGA	
2/3 MDE PGA	**0.196098**	
Seismic Soil Reaction	**9,478,753.07**	**lbs**
Structure seismic Driving Force	**15,897,371**	**lbs**

a. Behavior of Backfills.

(1) Non-Yielding Backfills. For low intensity ground motions the backfill material may respond within the range of linear elastic deformations. Walls with non-yielding backfills can be expected to have dynamic soil pressures greater than those predicted by the Mononobe-Okabe method. The dynamic soil pressures and associated forces in the backfill may be analyzed as an elastic response using Wood's method as described in ITL 92-11 (Ebeling and Morrision, 1992). A reasonable estimate for determining the additional lateral seismic soil force against a soil retaining structure, for non-yielding backfill conditions, can be determined as

$$F_{sr} = \gamma h^2 k_h$$

where: F_{sr} = Lateral seismic force representing dynamic soil pressure effects

γ = Unit weight of soil. Use moist or submerged unit weight when all soil is above or below the water table. For partially submerged soils the unit weight shall be proportioned by a weighted average.

h = Height of backfill

k_h = Effective peak ground acceleration, expressed as a decimal fraction of the acceleration of gravity

The seismic component of the total soil force F_{sr} is assumed to act at a distance of 0.63 h above the base of the wall. This force must be combined with the structure lateral inertial force, and if water is present, hydrodynamic seismic forces to obtain the total seismic force on the wall. Evaluation of a wall with non-yielding backfill for the aforementioned seismic forces is illustrated by Example 32 of ITL-92-11 (Ebeling and Morrison, 1992). The various seismic forces described above must be combined with static soil pressure forces and static water pressure forces to get the total force on the wall. Soil retaining structures not meeting stability criteria using the preliminary screening method should be evaluated using refined analysis techniques described in ITL-92-11 (Ebeling and Morrison, 1992).

EM 1110-2-2100 (assuming a per-foot analysis)

3-7. Factors of Safety for Sliding

Analysis of sliding stability is discussed in detail in Chapter 2 and Chapter 5. A factor of safety is required in sliding analyses to provide a suitable margin of safety between the loads that can cause instability and the strength of the materials along potential failure planes that can be mobilized to prevent instability. The factor of safety for sliding is defined by equation 3-1. The required factors of safety for sliding stability for *critical* structures and for *normal* structures are presented in Tables 3-2 and 3-3, respectively.

$$FS_s = \frac{N \tan\phi + cL}{T} \qquad (3\text{-}1)$$

where

N = force acting normal to the sliding failure plane under the structural wedge.
ϕ = angle of internal friction of the foundation material under the structural wedge.
c = cohesive strength of the foundation material under the structural wedge.
L = length of the structural wedge in contact with the foundation.
T = shear force acting parallel to the base of the structural wedge.

Table 3-3 Required Factors of Safety for Sliding - Normal Structures

	Load Condition Categories		
Site Information Category	**Usual**	**Unusual**	**Extreme**
Well Defined	1.4	1.2	1.1
Ordinary	1.5	1.3	1.1
Limited	3.0	2.6	2.2

TanPhi for Concrete founded on rock is minimum 0.3
Cohesion is the concrete to rock bond which would be controlled by the shear strength of the concrete. Limit this value to 10% of the compression strength of concrete or 30psi
T is the summation of all driving forces
N is the summation of all vertical resisting forces, which is the total weight of the structure minus the uplift force

PGA	0.0753	
Concrete Density	150	lb/ft^3
Steel density	490	lb/ft^3
Water Density	62.4	lb/ft^3

Cofferdam from top	Volume(ft^3)	Weight (lb)	Seismic Weight (lbs)
1	2733.832227	410074.8341	30878.63501
2	756.8461997	370854.6378	27925.35423
3	2212.306253	331845.9379	24987.99913
4	12178.85202	1826827.804	137560.1336
5	11523.26531	1728489.796	130155.2817
6	3132	1534680	115561.404
Total		6202773.01	467068.8076

Volume of disp	694,571	cubic ft

123 ft of tower is under the water

Uplift	43,341,214	lbs
Weight of the	81,068,502	lbs

(weight of struc	37,727,289	lbs

Collector	Volume(ft^3)	Weight (lb)	Seismic Weight
	491919.553	73787932.95	5556231.351

Trashrack	Volume(ft^3)	Weight (lb)	Seismic Weight
1	314.5361036	154122.6908	11605.43861

Primary bypass assembley	Volume(ft^3)	Weight (lb)	Seismic Weight
	1301.210659	637593.2227	48010.76967
	3250.45	202828.08	15272.95442
		840421.3027	63283.72409

Air vent 4:1	Volume(ft^3)	Weight (lb)	Seismic Weight
	26.05896644	12768.89355	961.4976846

Air vent 3:1	Volume(ft^3)	Weight (lb)	Seismic Weight
	37.83130903	18537.34142	1395.861809

Collector Bulkhead	Volume(ft^3)	Weight (lb)	Seismic Weight
	106.012537	51946.14315	3911.544579

total weight of structure	81,068,502.33
Total Seismic weight	6,104,458.23

15889426.46

PGA	0.196098	
Concrete Density	150	lb/ft^3
Steel density	490	lb/ft^3
Water Density	62.4	lb/ft^3

Cofferdam from top	Volume(ft^3)	Weight (lb)	Seismic Weight (lbs)
1	2733.832227	410074.8341	80414.85482
2	756.8461997	370854.6378	72723.85277
3	2212.306253	331845.9379	65074.32474
4	12178.85202	1826827.804	358237.2786
5	11523.26531	1728489.796	338953.3921
6	3132	1534680	300947.6786
Total		6202773.01	1216351.382

Volume of disp	694,571	cubic ft

123 ft of tower is under the water

Uplift	43,341,214	lbs
Weight of the	81,068,502	lbs

(weight of struc	37,727,289	lbs

Collector	Volume(ft^3)	Weight (lb)	Seismic Weight
	491919.553	73787932.95	14469666.08

Trashrack	Volume(ft^3)	Weight (lb)	Seismic Weight
1	314.5361036	154122.6908	30223.15141

Primary bypass assembley	Volume(ft^3)	Weight (lb)	Seismic Weight
	1301.210659	637593.2227	125030.7558
	3250.45	202828.08	39774.18083
		840421.3027	164804.9366

Air vent 4:1	Volume(ft^3)	Weight (lb)	Seismic Weight
	26.05896644	12768.89355	2503.954488

Air vent 3:1	Volume(ft^3)	Weight (lb)	Seismic Weight
	37.83130903	18537.34142	3635.135578

Collector Bulkhead	Volume(ft^3)	Weight (lb)	Seismic Weight
	106.012537	51946.14315	10186.53478

total weight of structure	81,068,502.33
Total Seismic weight	15,897,371.17

15889426.46

3-8. Factors of Safety for Flotation

A factor of safety is required for flotation to provide a suitable margin of safety between the loads that can cause instability and the weights of materials that resist flotation. The flotation factor of safety is defined by equation 3-2. The required factors of safety for *flotation* are presented in Table 3-4. These flotation safety factors apply to both *normal* and *critical* structures and for all site information categories.

$$FS_f = \frac{W_S + W_C + S}{U - W_G} \tag{3-2}$$

where

W_S = weight of the structure, including weights of the fixed equipment and soil above the top surface of the structure. The moist or saturated unit weight should be used for soil above the groundwater table and the submerged unit weight should be used for soil below the groundwater table.
W_C = weight of the water contained within the structure
S = surcharge loads
U = uplift forces acting on the base of the structure
W_G = weight of water above top surface of the structure.

Table 3-4 Required Factors of Safety for Flotation – All Structures

	Load Condition Categories		
Site Information Category	**Usual**	**Unusual**	**Extreme**
All Categories	1.3	1.2	1.1

Buoyancy FS at different water elevations

Elevation	Ws	Volume	U	Wg	FS	
1181	81,068,502	694,571	43,341,213.55	-	1.87	Usual
1187	81,068,502	694,571	43,341,213.55	1,715,725.44	1.95	Unusual
1202	81,068,502	694,571	43,341,213.55	6,005,039.04	2.17	Unusual
1224	81,068,502	694,571	43,341,213.55	12,296,032.32	2.61	Extreme

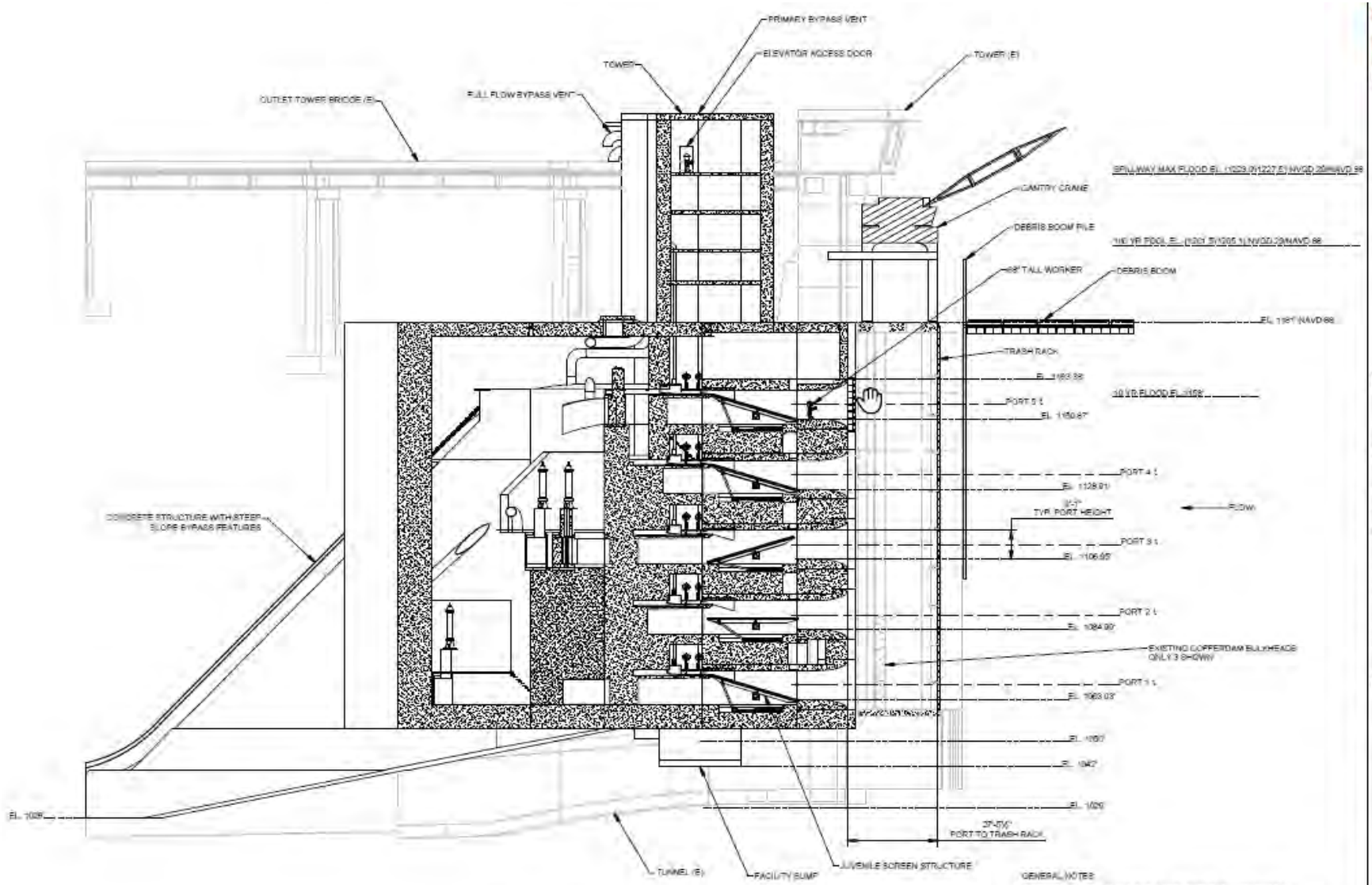

C2 MULTI-PORT COLLECTOR-SECTION VIEW
SCALE: NTS

GENERAL NOTES:

1. REFERENCE 95% PLANS FOR COMPLEMENTARY INFORMATION.
2. TOPOGRAPHY AND EXCAVATION NOT SHOWN.
3. COLLECTOR PORT STRUCTURE REUSED FROM 95% DESIGN. NEW DESIGN FEATURES HAVE BEEN INTEGRATED TO ENSURE PORT SHAPE IS UNCHANGED.
4. PORT DISCHARGE IS MODIFIED TO INCLUDE STEEP SLOPE BYPASS GEOMETRIES.

Design a bulkhead bottom girder including shear flow. Skin Plate in TENSION

Typical Girder Section - Skin Plate in TENSION
Spreadsheet Assumes 50ksi Steel (ASTM A709 Grade 50)

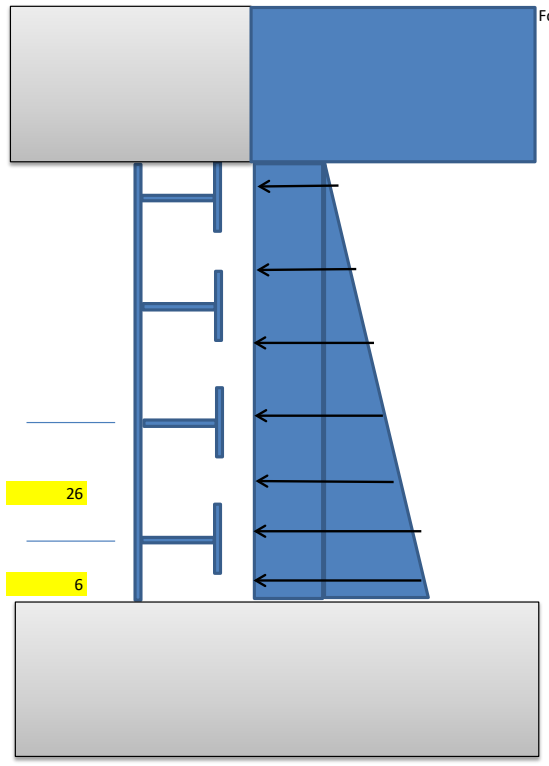

TOG Elevation	1070		
BOG Elevation	1060		
Max Head TOG	154		
Max Head BOG	164		
Gate Span	24	feet	
Trib Area of Bottom Girder	19	inches	
Pressure at bottom of gate	10233.6	lb/ft^2	
Pressure in lb/in	71.06666667	lb/in^2	
Line load W (pressure times trib area)	1350.266667	lb/in	
Simple Span Moment	13999564.8	in-lb	wl^2/8
Simple Span Shear	194438.4	lb	wl/2
Approximate S Required			
Assume 0.6*50ksi	466.65216	Cubic Inches	
Skin plate thickness	1	inches	

Computed Section Properties for Combined Section
Taken from adjacent sheet

Effective Flange Width	18.30322376	Inches	
(unstiffened conservatively taken as 0.38/Square Root E/Fy) to maintain a compact section			
Effective flange width must be less than	19	OK	
If effective flange width is greater than girder spacing, use spacing			
Final Effective Flange Width	18.30322376	Inches	
Use Section Properties Sheet			
A =	54	sq. inches	
d =	12.20833	inches	
I =	4472.156	inches to the 4th power	
S T =	434.5415	inches to the 3rd power	Skin Plate Side
S B =	366.32	inches to the 3rd power	Flange Side

Skin Plate in tension means you can use the full tension St bending capacity

Check Bending Stress	32.21686505	ksi
Allowable	33	ksi
Section Acceptable for Bending?	OK	

Check Shear on the web of the T

Area of Just the web	24	square inches
Shear Stress on Web	8.1016	ksi
Allowable (0.4*50)	22	ksi
Section Acceptable for Shear	OK	

Check shear on a 9" web with effective 7.5" deep by 1.75" tapered web

Area of web	12.25	
Shear stress on web	15.87252245	
Allowable		
Allowable (0.4*50)	20	ksi
Section Acceptable for Shear	OK	

With Skin plate in tension you can get away with a maint girder that is 20 inches deep with a 1" skin plate, 1.5"x10" flange and 1" x 20" web that tapers down to 9" on the ends.

The rough opening in the drawing requires a bulkhead that is 24' wide and is about 18 feet tall.

Skin Plate Weight	17640
Webs	24255
Flanges	11025
End plates	1960
Total	54880
Paint and Welds	5488
	lbs
Grand Total	60368
Tons	30.184

Design Welds for Chosen Section

End Plate Thickness (Never thinner than the web) 1 inches

For skin plate in tension welds are subjected to shear flow plus direct tension

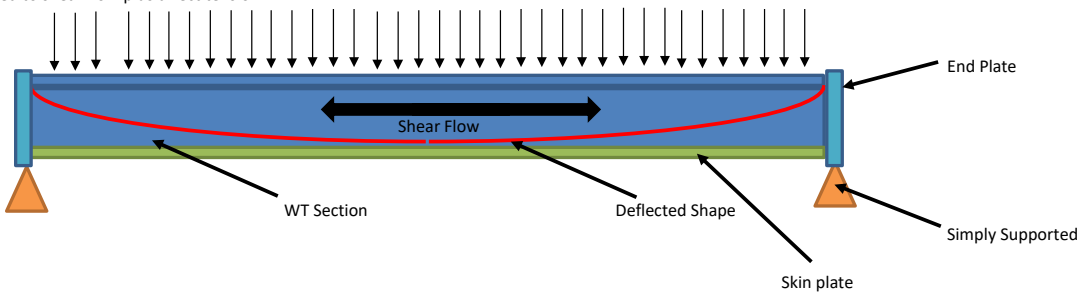

Section Properties for Shear Flow

Treat the weld as a line, such that the shear flow in kips/inch of weld is V*A*y/I*n

I is the moment of enertia of the entire section I = 4472.156

Total Depth

22.50 Inches

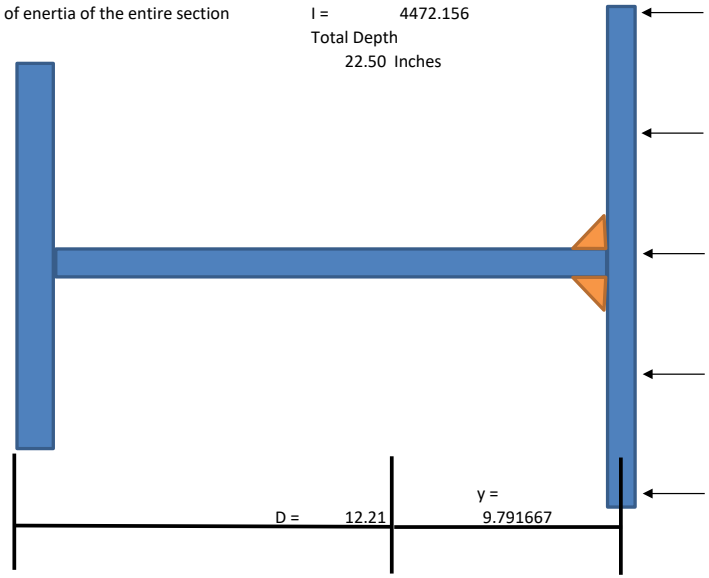

Distance from CG to Center of Skin Plate

A = Area of Effective Skin Plate, Effective Width Times Skin Plate Thickness

18.30322 square inches

n = Number of Fillet Welds Resisting the Load

n = 2 welds

V = 194.4384 Kips Taken from Design Sheet

Shear Flow Stress in Weld	3.896003	kips/inch
Direct Tension Demand	1.350267	kips/inch
Total	4.123355	kips/inch
Weld Size Required	0.3*70ksi*0.707*w = Shear Flow Demand	
Using 1.1 Bulkhead Factor	w = 0.252476	inch
Ignoring 1.1 overstress	w = 0.277723	inch
	Fraction 5/16	Rounded up to the next 3/16"

Min Weld Required by Code is a function of skin plate thickness and Stem of T Thickness

Skin Plate Thickness	1	inches
Stem Thickness	1	inches
Min Weld Size	5/16	

TABLE J2.4
Minimum Size of Fillet Welds

Material Thickness of Thinner Part Joined, in. (mm)	Minimum Size of Fillet Weld, [a] in. (mm)
To 1/4 (6) inclusive	1/8 (3)
Over 1/4 (6) to 1/2 (13)	3/16 (5)
Over 1/2 (13) to 3/4 (19)	1/4 (6)
Over 3/4 (19)	5/16 (8)

[a] Leg dimension of fillet welds. Single pass welds must be used.

Note: See Section J2.2b for maximum size of fillet welds.

Table 5.7
Minimum Fillet Weld Sizes (see 5.13)

Base Metal Thickness (T)[a]		Minimum Size of Fillet Weld[b]	
in	mm	in	mm
T ≤ 1/4	T ≤ 6	1/8[c]	3[c]
1/4 < T ≤ 1/2	6 < T ≤ 12	3/16	5
1/2 < T ≤ 3/4	12 < T ≤ 20	1/4	6
3/4 < T	20 < T	5/16	8

[a] For nonlow-hydrogen processes without preheat calculated in conformance with 4.8.4, T equals thickness of the thicker part joined; single-pass welds shall be used.
For nonlow-hydrogen processes using procedures established to prevent cracking in conformance with 4.8.4 and for low-hydrogen processes, T equals thickness of the thinner part joined; single-pass requirement shall not apply.

[b] Except that the weld size need not exceed the thickness of the thinner part joined.

[c] Minimum size for cyclically loaded structures shall be 3/16 in [5 mm].

Table 2.1
Minimum Fillet Weld Size[a,b] (see 2.8.1)

Base Metal Thickness of Thicker Part Joined (T)	Minimum Size of Fillet Weld	
T ≤ 20 mm [3/4 in]	6 mm [1/4 in]	Single-pass welds shall be used
T > 20 mm [3/4 in]	8 mm [5/16 in]	

[a] Smaller fillet welds may be approved by the Engineer based on applied stress and the use of appropriate preheat.

[b] Except that the weld size need not exceed the thickness of the thinner part joined. For this exception, particular care should be taken to provide sufficient preheat to ensure weld soundness.

Size Simple Span Shear Welds - Weld between WT section and End Plate

Maximum Shear Load	194.4384	kips	Taken from Design Sheet

Need to Consider Weld Access Holes!

1" Radius Min

True Length of Available Weld - Depth of T minus flange, minus weld access hole etc.

Radius Used	2	inches

= H - Skin Plate Thickness-Flange Thickness Minus Weld Access Holes

L =	7.50	inches of weld on each side

1" Radius Min

Assuming the plate is welded both sides, what weld size is required?

Length of the weld is 2 times the L found above	15	inches	
Area of weld treated as a line is the same as above	15		
Shear on Weld	12.96256	k/in	
Weld Size Required			0.3*70ksi*0.707*1.1*w = Shear Demand
Using 1.1 Bulkhead Factor			w = 0.793705 inch
Ignoring 1.1 overstress			w = 0.873076 inch
			Fraction 14/16 Rounded up to the next 1/16"

Min Weld Required by Code is a function of skin plate thickness and Stem of T Thickness

Skin Plate Thickness	1	inches
End Plate Thickness	1	inches
Min Weld Size	1/4"	

Recheck shear on web of T with weld access holes removed

Length of Web is Shear	7.50	inches	
Area of Web being sheared	13.13		Requires 1.75" web thickness
Shear stress on web	14.81435	ksi	
Allowable (0.6*.75*50)/1.67	14.82036	ksi	
Section Acceptable for Shear	OK		

U.S. ARMY CORPS OF ENGINEERS	OFFICE SYMBOL: CENPP-PE-DS	
PROJECT:	COMPUTED BY:	DATE:
SUBJECT:	CHECKED BY:	SHT. OF PART:

Calculation of Section Properties for the beam shown below :

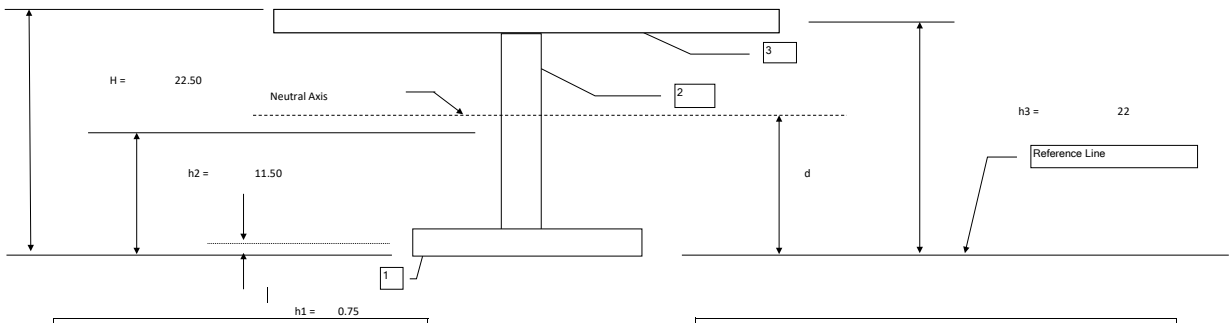

INPUT DATA :

Piece Nr.	Width	Thickness
1	10.000	1.5
2	20.000	1
3	19.000	1

Misc. Calculations

h1	0.75	inches
h2	11.5	inches
h3	22	inches
H	22.5	inches

OUTPUT DATA :

Cross section area of composite beam	A =	54.00	sq. inches
Distance from reference line to centroid	d =	12.21	inches
Moment of Inertia about Centroid	I =	4472	inches to the 4th power
Section Modulas at Top	S_T =	434.54	inches to the 3rd power
Section Modulas at Bottom	S_B =	366.32	inches to the 3rd power
Plastic Modulus	Z =	372.08	inches to the 3rd power

b= SPACING OF FRAME MEMBERS

Hf*Fallow*S=M
Fallow=.6 Fy S= 366.32
Hf= 1.1
Fy= 50
M= 1166.63 kft/ft
b=(Hf)*(.67)*(Fy)*(S)/(M)

b (ft) = 0.86

Calculation chart :

Piece Nr.	w	t	A	b	h	Io	dl	Ad²	Ic	hA values
1	10.00	1.5	15	10.00	1.5	2.81	11.45833333	1969.4	1972.2	11.25
2	20.00	1	20	1	20.000	666.67	0.708333333	10.0	676.7	230.00
3	19.00	1	19	19	1	1.58	-9.79	1821.7	1823.2	418.00
Total Area =			54.00 sq. in.				Total Moment of Inertia =		4472.16	659.25

C	$_t$ =	10.29	inches	dist. to N/A is	d =	12.20833333	inches
C	$_b$ =	12.21	inches				
S	$_T$ =	434.54	inches^3				
S	$_B$ =	366.32	inches^3				
Z	=	372.0833333	inches ^3				

Wall Design and Analysis

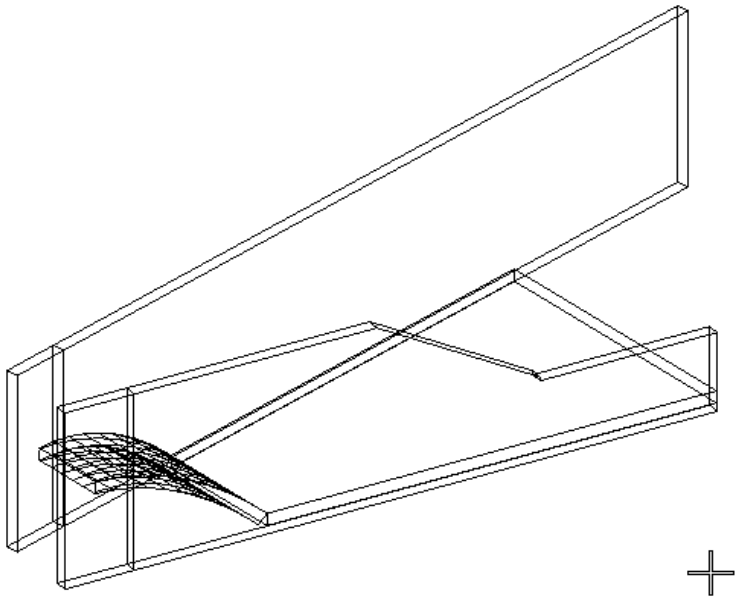

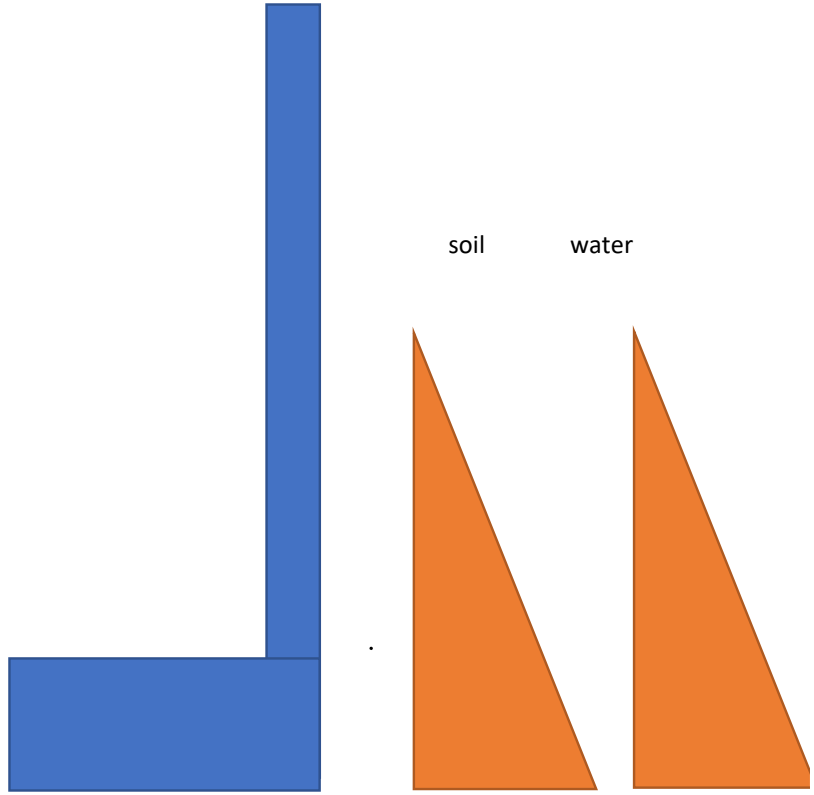

The walls are 29 feet tall
Backfill soil is approximately 15 feet up the wall

	15	Soil height on wall

Apply at rest soil pressure on the wall and calculate a bending moment

Unit Weight	130	
Ko	0.75	Conservative for backfill we place, but can also be as high as 1 when compacted against the wall so never use less than .75
Soil Pressure	10968.75	psf

Assume backfill is charged fully with hydrostatic load as well

Water Pressure	7020	psf
Total	17988.75	psf

Factor the load for concrete as single load - 1.6 live load factor

Load	28782	psf
Acting	5	

Cantilever Bending Moment on wall	143910	ft-lb
	1726920	in-lb

Try a 4 foot wall

H	48	
d	40	inches

Try #9 at 12"	As	1	square inches per foot
f'c		5000	psi
a		1.176471	
Mn		2364706	in-lb
Phi		0.9	
PhiMn		2128235	in-lb
FS above what is required		1.232388	

Wall Design and Analysis

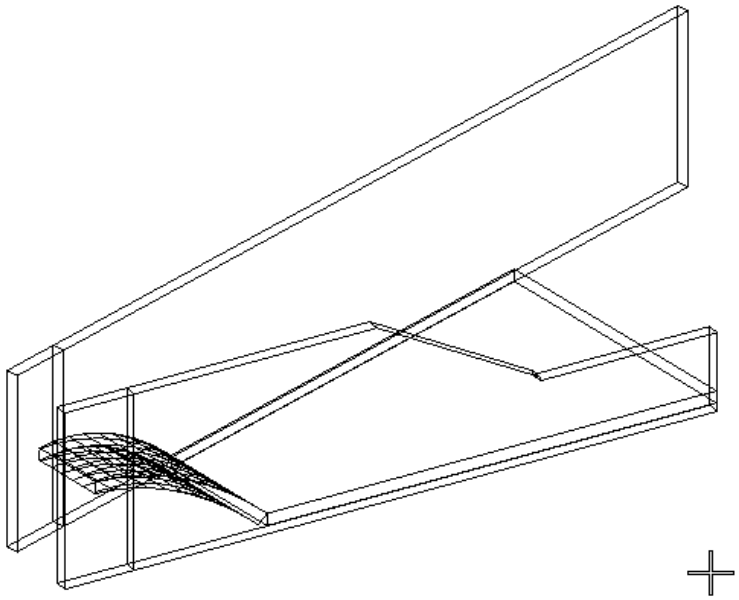

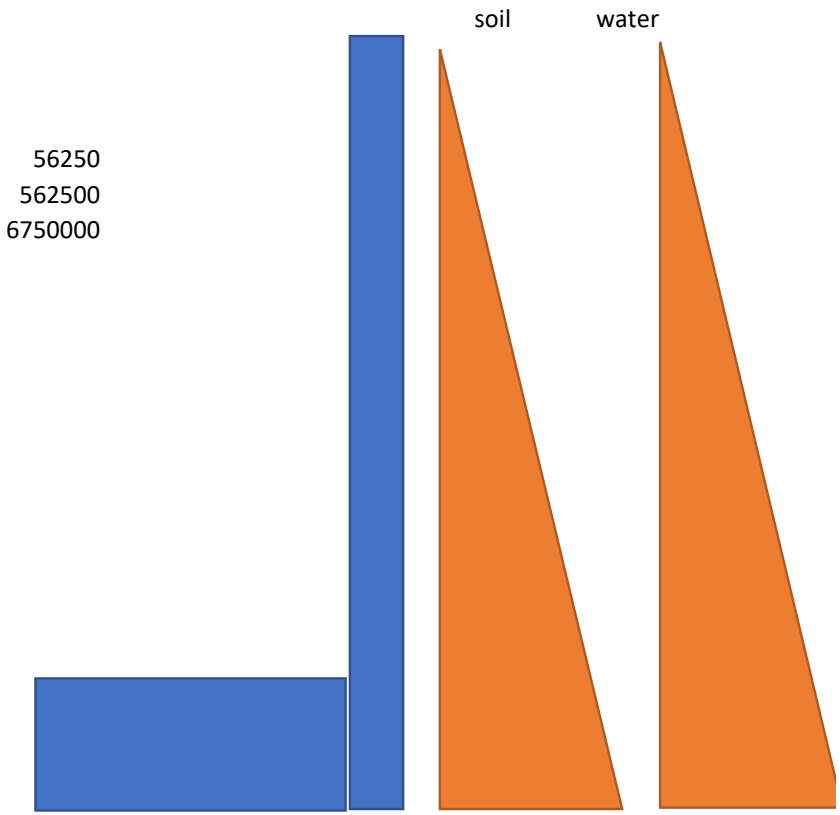

The walls are 29 feet tall
Backfill soil is approximately 30 feet up the wall

	30	Soil height on wall

Apply at rest soil pressure on the wall and calculate a bending moment

Unit Weight	130	
Ko	0.75	Conservative for backfill we place, but can also be as high as 1 when compacted against the wall so never use less than .75
Soil Reaction	43875	lbs
Total	43875	lbs

Factor the load for concrete as single load - 1.6 live load factor

Load	70200	lbs
Acting	10	

Cantilever Bending Moment on wall	702000	ft-lb
	8424000	in-lb

14 foot thick wall required

H	168	
d	160	inches

Try #9 at 12"	As	1	square inches per foot
f'c		5000	psi
a		1.176471	
Mn		9564706	in-lb
Phi		0.9	
PhiMn		8608235	in-lb
FS above what is required		1.02187	

Either design as a counterfort wall or install struts in the outfall to support the walls

Or tie the wall back with anchors

Design Tieback Load to thin wall

Assuming anchors spaced at 10 feet how much load would need to be in each anchor to lower the stress in the wall to be 2 feet thick?

Feet Thick	4.5	
H	54	
d	46	inches

Try #9 at 6"	As	2	square inches per foot
f'c		5000	psi
a		2.352941	

Mn	5378824	in-lb
Phi	0.9	
PhiMn	4840941	in-lb

Assuming pinned pinned supports with 30 feet of soil what is the moment on the wall with a reaction at 10 feet up the wall?

The resultant unfactored moment would be 390000 ft-lb
4680000 in-lbs

So the wall would need to be 4.5 feet thick with anchors

Anchor reaction would be the max shear reaction from soil from a working load -
Max reaction at the top of the wall is
10400 lbs

With anchors spaced at 10 feet, the load in each anchor would be 104000 lbs

How large of an anchor would be required to carry this load?
1" 150ksi bonded anchors would handle the load - dependent on soil conditions used as a soil nail etc.

Design a 4.5' thick soil nailed wall to carry 30 feet of soil.

A1

Key Properties

Length of Beam	$L =$	30	ft
Young's Modulus	$E =$	4000000	psi
Area of Cross Section	$A =$	288	in²
Second Moment of Area (Moment of Inertia)	$I_z =$	17300	in⁴
Position of Supports from Left	$x =$		

Support Type	Position x (ft)
Pinned	0
Fixed	30
Pinned	

Spring Supports, Continuous Supports, and Inclined Roller Supports

Simple Loads

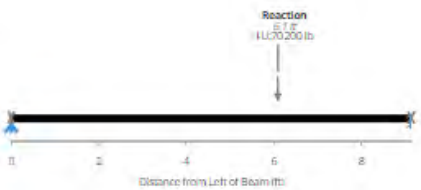

Distributed Loads $w =$

Label	Start Magnitude w_1 (plf)	End Magnitude w_2 (plf)	Start Location x_1 (ft)	End Location x_2 (ft)

Point Loads $P =$

Label	Magnitude P (lb)	Location x (ft)
Reaction	70200	20

Axial Loads, Moment Loads, Linked Loads, and Oriented Loads

Per-Span Analysis

Summary

Moment Demand	$M^* = -390000$ in. lb
Shear Demand	$V^* = -59800$ lb
Deflection	$\delta = -0.292$ in

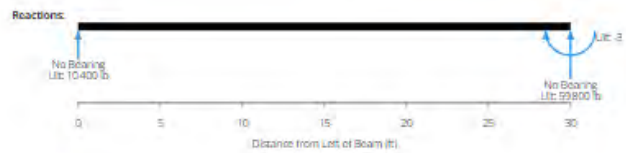

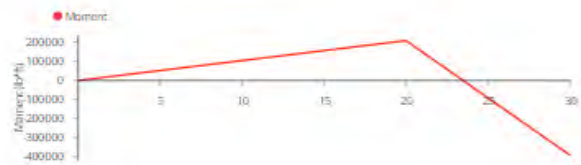

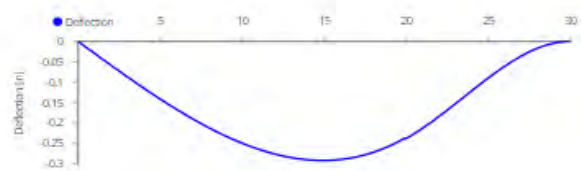

Assume wall is 30 feet tall with soil up to 30 feet, designed for at-rest presure

Assume counterforts spaced at 7 feet that are a minimum of 4 feet deep creating a wall heel

Plan

Design worst case - check the 10 foot span between counterforts for the maximum soil reaction

Height of Soil	30	
Unit Weight	67.6	pcf
Ko	0.75	worst case

Total Reaction	22815	From Soil

Saturated Backfill, ignore buoyant spil and just add the water load worst case

Water Pressure	28080

Total reaction on the wall per foot of width is 50895 lbs/ft

Design a 1' tall beam to carry this entire load spanning 10 feet to determine max wall thickness required

b	12
h	48
d	42

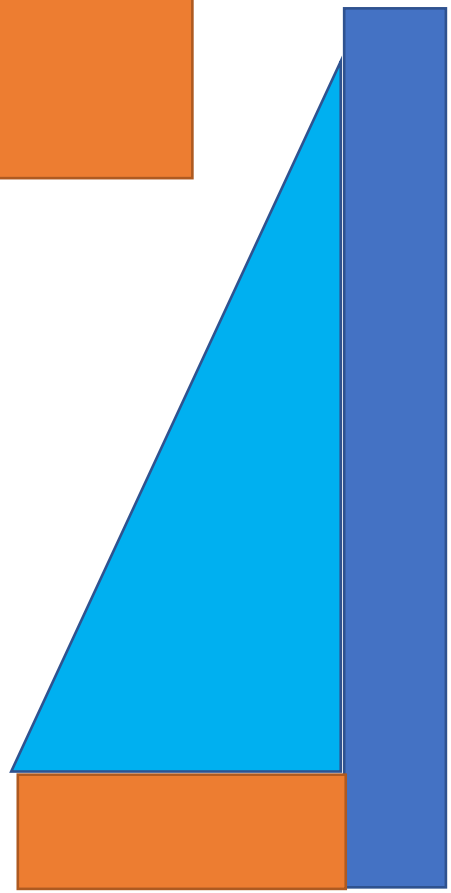

Max Moment Pinned-pinned			Wl^2/12	worst case moment
L	7	feet		
w	50895	lbs/ft		
M	207821.3	ft-lb		
M	2493855	in-lbs		
Factored moment	3,990,168.00	in-lb		
Assume #9 bars at 6"	As		2	
f'c			5000	psi
a			2.352941176	
Mn			4898823.529	in-lb
Phi			0.9	
PhiMn			4,408,941.18	in-lb

So 4' thick walls with counterforts would likely work for 30 feet of soil

Use lump sum seismic criteria (woods method) because we do not want this wall to move.
Wall Design and Analysis

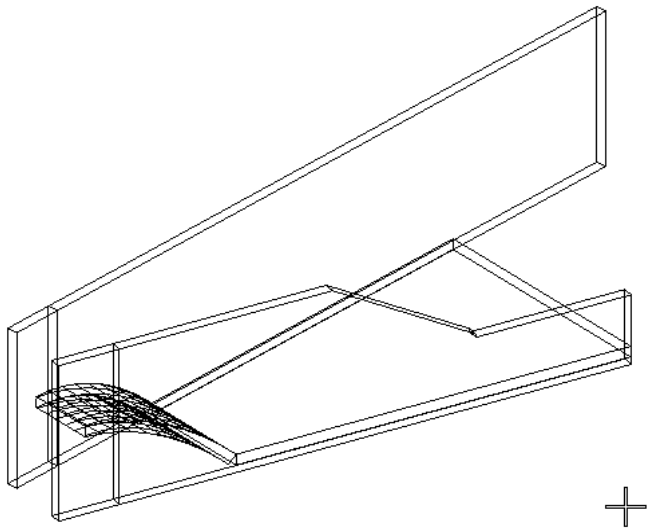

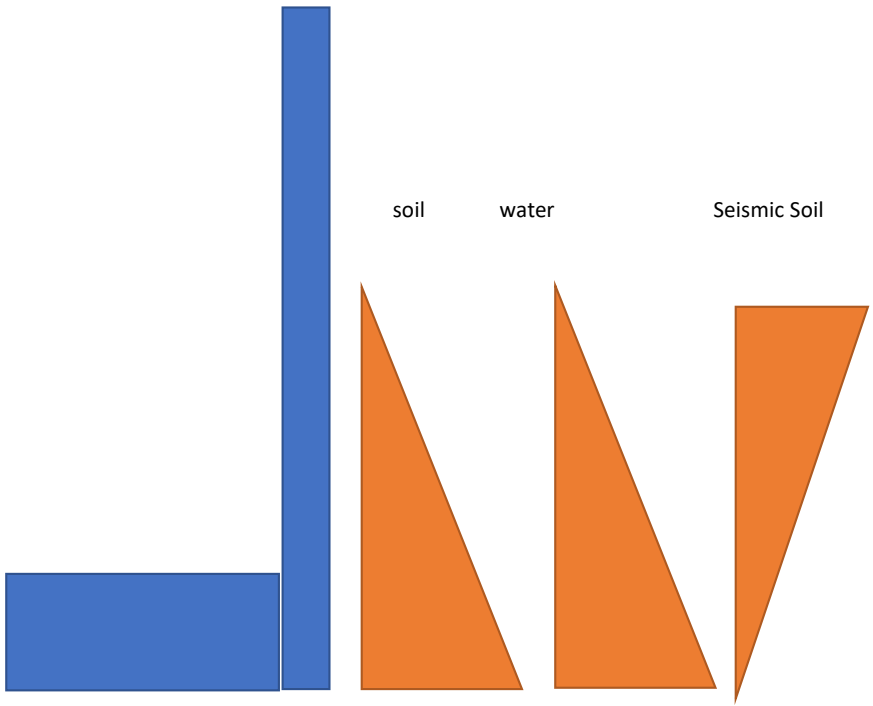

The walls are 29 feet tall
Backfill soil is approximately 15 feet up the wall
15 Soil height on wall
Apply at rest soil pressure on the wall and calculate a bending moment

Earth and water pressure stay the same.

Seismic Soil pressure is an excited mass of soil. Determine the mass of a 15 foot tall chunk of soil excited in the earthquake.

PGA	0.296	
Volume	14625	lbs
Excited Soil Load	4329	
Acting	9.999	ft up the wall
Factor as Live Load	6926.4	lbs
Wall Self Weight	8700	lbs
Excited Weight	2575.2	lbs
Acting	14.5	ft up from the base
Added Moment	106597.5	
Total Moment	250507.5	ft-lb
Try a 4 foot wall	3006090	in-lb
Try a 2 foot thick wall		
H	48	
d	40	inches
#9's at 6"	As	2 square inches per foot
f'c		5000 psi
a		2.352941
Mn		4658824 in-lb
Phi		0.9
PhiMn		4192941 in-lb
FS above what is required		1.394816

Use lump sum seismic criteria (woods method) because we do not want this wall to move.
Wall Design and Analysis

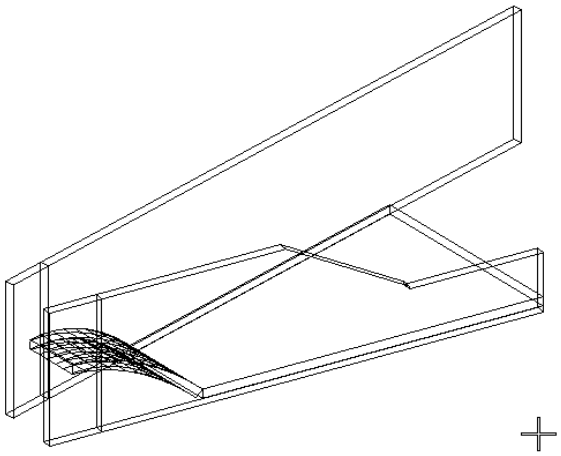

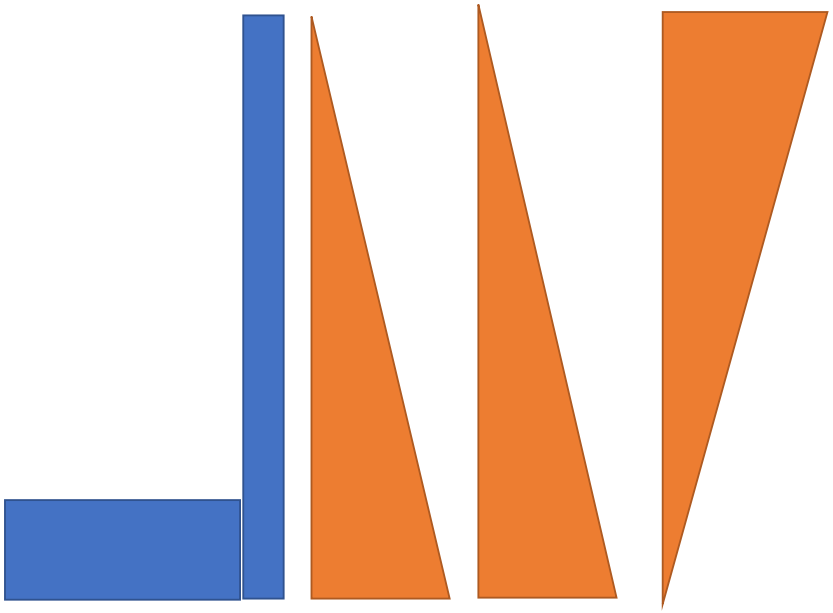

The walls are 29 feet tall
Backfill soil 30 feet up the wall

30 Soil height on wall

Apply at rest soil pressure on the wall and calculate a bending moment

Earth and water pressure stay the same.

Seismic Soil pressure is an excited mass of soil. Determine the mass of a 15 foot tall chunk of soil excited in the earthquake.

PGA	0.296	
Volume	58500	lbs
Excited Soil Load	17316	
Acting	9.999	ft up the wall
Factor as Live Load	27705.6	lbs
Wall Self Weight	8700	lbs
Excited Weight	2575.2	lbs
Acting	14.5	ft up from the base
Added Moment	314368.694	
Total Moment	1016368.69	ft-lb
Try a 4 foot wall	12196424.3	in-lb

H	48	
D	40	inches

Try #9 at 6"	As	2	square inches per foot
f'c		5000	psi
a		2.352941	
Mn		4658824	in-lb
Phi		0.9	
PhiMn		4192941	in-lb
FS above what is required		0.343784	

Wall would need to be designed as a counterfort wall in order to resist 30 feet of soil with seismic loading.

The slab spans 45 feet and has 100 percent uplift pressure on it.

The base of the slab is at elevatio	992	
Max tailwater is elevation	1050	
Max Uplift	58	ft of water up

However, when the slab has 58 feet of water up, it has 58 feet of water down as well

Design for full uplift pressure assume water to the top of the wall - or 29 feet of uplift

Pressure	1809.6	psf
Line load on a 12" wide strip	1809.6	lb/ft
	150.8	lb/in
Max Moment	5496660	in-lb ignoring slab self weight

Try a 5 foot thick slab

H	60	
d	52	inches

Reduce Demand Based on Chosen Slab Weight

Weight of slab	62.5	lb/in
New Demand Moment	3218535	
Factored Moment	5149656	

Try #9 at 6"	As	2	square inches per foot
f'c		5000	psi
a		2.352941	
Mn		6098824	in-lb
Phi		0.9	
PhiMn		5488941	in-lb
FS above what is required		1.065885	

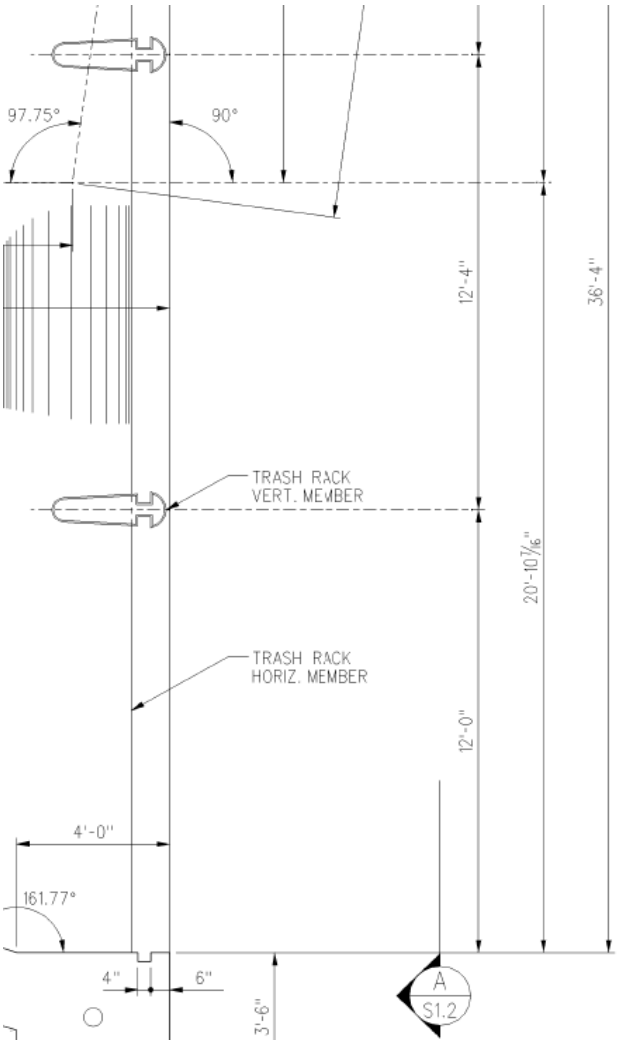

Trashrack Dimensions
3.75" Wide bars in 4" wide slots spanning 12'4"

12	height	
12	width	

Horizontal Bar Spacing and Load

Bars spaced	10	0.833333	ft
Differential Head	10	feet	
Pressure	624	psf	
Each Horizontal Bar would See		520	lb/ft on the bar
Bending Moment		9360	ft-lb
Bending Moment		112320	in-lb
Section Modulus of 1/2"x2" Bar		0.333333	cubic inches
Stress in Bar		336960	psi
		336.96	ksi NG

Can you pick this trashrack up from flat to vertical though?
Calculate weight of trashrack

Side Frame	3.5x3.5x1/4	252
Top and bottom frame		252
Vertical Bars		980
Horizontal Bars		1531.25
Total Weight		3015.25 lbs

Assume all weight through the center of the trashrack, pinned on both ends

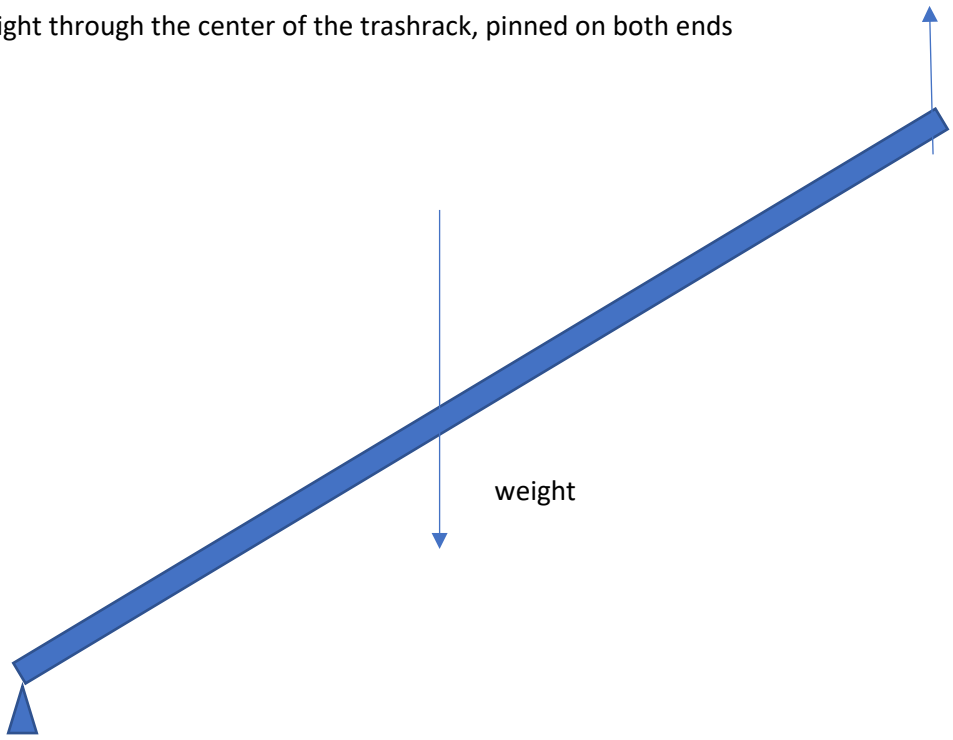

Max Moment	108549	in-lb
average moment per foot of width	9045.75	in-lb/ft
S required	301.525	cubic inches

Design 1" thick bars to carry 10 feet of differntial head

12	height	
12	width	

Horizontal Bar Spacing and Load

Bars spaced	10	0.833333	ft
Differential Head	10	feet	
Pressure	624	psf	
Each Horizontal Bar would See	520	lb/ft on the bar	
Bending Moment	9360	ft-lb	
Bending Moment	112320	in-lb	
Section Modulus of Bar	4.166667	cubic inches	
Stress in Bar	26956.8	psi	
	26.9568	ksi	OK

The rack cannot span the full height of be picked full height
Check vertical bar span stress in 12 foot sections with 10 feet of differential head

Differential Head	10	feet
Pressure	624	psf
Each Horizontal Bar would See	520	lb/ft on the bar
Bending Moment	9360	ft-lb
Bending Moment	112320	in-lb
Section Modulus of Bar	4.166667	cubic inches
Stress in Bar	26956.8	psi
	26.9568	ksi OK
Load on horizontal bar per inch	43.33333	lb/in

Check Deflection 5wl^4/384*E*I

Horizontal Bars	I	4.394531	1.90	deflection, in inches, spanning 12 feet

So the bars chosen cannot handle 10 feet of differential head without deflecting so much you would never get them out.

How deep a horizontal bar would we need to prevent deflection to L/600 for 12 feet of span?
0.246666 inches

Setting Delta to .25 inches, what I is required?
I 33.91591645

Assuming 1" bar, how deep would it need to be?

D 7.410740415

The rack cannot span the full height of be picked full height
Check vertical bar span stress in 12 foot sections with 10 feet of differential head

Differential Head	5	feet
Pressure	312	psf
Each Horizontal Bar would See	260	lb/ft on the bar
Bending Moment	4680	ft-lb
Bending Moment	390	in-lb
Section Modulus of Bar	4.166667	cubic inches
Stress in Bar	93.6	psi
	0.0936	ksi OK
Load on horizontal bar per inch	21.66667	lb/in

Check Deflection 5wl^4/384*E*I

Horizontal Bars	I	4.394531	0.95	deflection, in inches, spanning 12 feet

So the bars chosen cannot handle 5 feet of differential head without deflecting so much you would never get them out.

How deep a horizontal bar would we need to prevent deflection to L/600 for 12 feet of span?
0.246666 inches

Setting Delta to .25 inches, what I is required?
I 16.95795823

Assuming 1" bar, how deep would it need to be?

D 5.881908565

Howard A. Hanson Dam
Additional Water Storage Project

Section 902 Post Authorization Change Validation Study – Fish Passage
King County, Washington

APPENDIX B-6

MECHANICAL

Final Integrated Validation Report and

Supplemental Environmental Impact Statement

US Army Corps of Engineers®
Seattle District

TACOMA POWER
TACOMA WATER
TACOMA RAIL
TACOMA PUBLIC UTILITIES

Contents

B-6.1 Collector Unwatering Bulkheads Drawing 1
B-6.2 Crane Drawings from 95% Set 2
B-6.3 MIS Screen Drawings from 95% Set 3
B-6.4 MIS Screen Bubbler Arrangement 10
B-6.5 MIS Screen Operating Cylinder 11
B-6.6 MIS Screen Mesh Material 14
B-6.7 Primary Bypass Valve 16
B-6.8 Primary Bypass Valve Operators 24

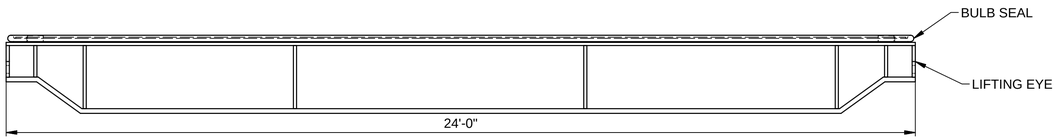

F1 PLAN VIEW - COLLECTOR UNWATERING BULKHEAD
SCALE: 1:24

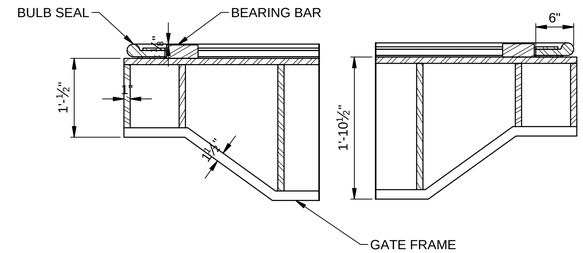

F8 SECTION
SCALE: 1:12

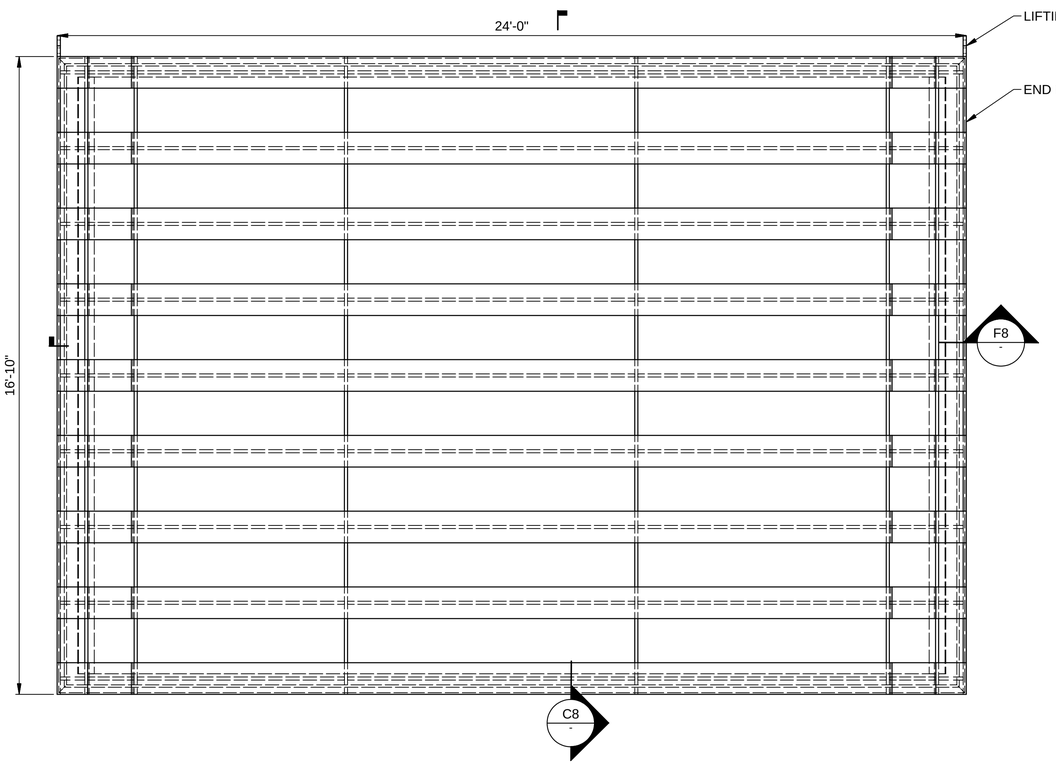

B1 UPSTREAM ELEVATION - COLLECTOR UNWATERING BULKHEAD
SCALE: 1:24

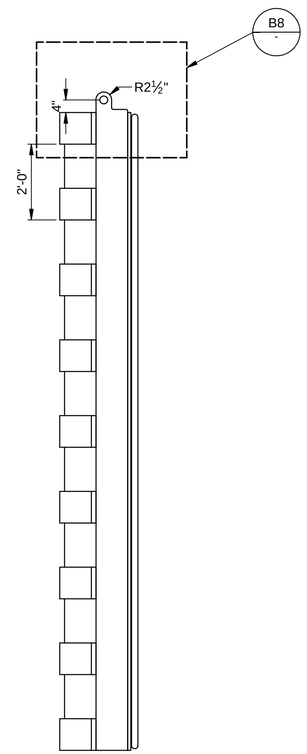

B6 SIDE VIEW - COLLECTOR UNWATERING BULKHEAD
SCALE: 1:24

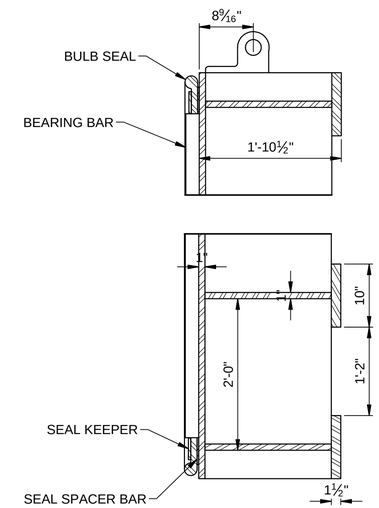

C8 SECTION
SCALE: 1:12

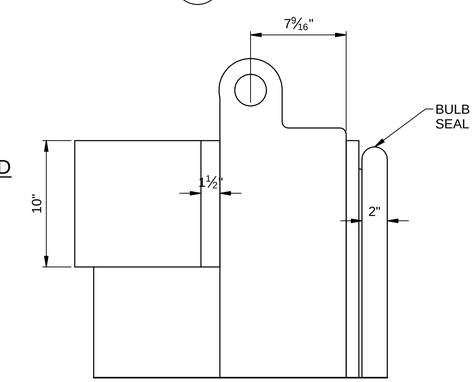

B8 DETAIL
SCALE: 1:6

NOTES:
1. TWO BULKHEADS REQUIRED
2. EACH BULKHEAD WEIGHTS APPROXIMATELY 60,000 LBF.
3. MATERIAL IS ASTM A 572 GRADE 50 STEEL
4. PAINT WITH VINYL

US Army Corps of Engineers ®

MARK	DESCRIPTION	DATE

ISSUE DATE: MMMMMMMMM YYYY
SOLICITATION NO.: XXXXXX-XX-X-XXXX
CONTRACT NO.: XXXXXX-XX-X-XXXX
PROJECT CODE:

DESIGNED BY:
DRAWN BY:
CHECKED BY:
SUBMITTED BY:
SIZE: ANSI D

U.S. ARMY CORPS OF ENGINEERS
XXXXXXXX DISTRICT
STREET ADDRESS
CITY, STATE, ZIP

PROJECT/CONTRACT LOCATION
PROJECT/CONTRACT DESCRIPTION
PROJECT NUMBER

HOWARD HANSON DAM
FISH PASSAGE FACILITY
COLLECTOR UNWATERING BULKHEAD

SHEET ID
M-001

STATUS

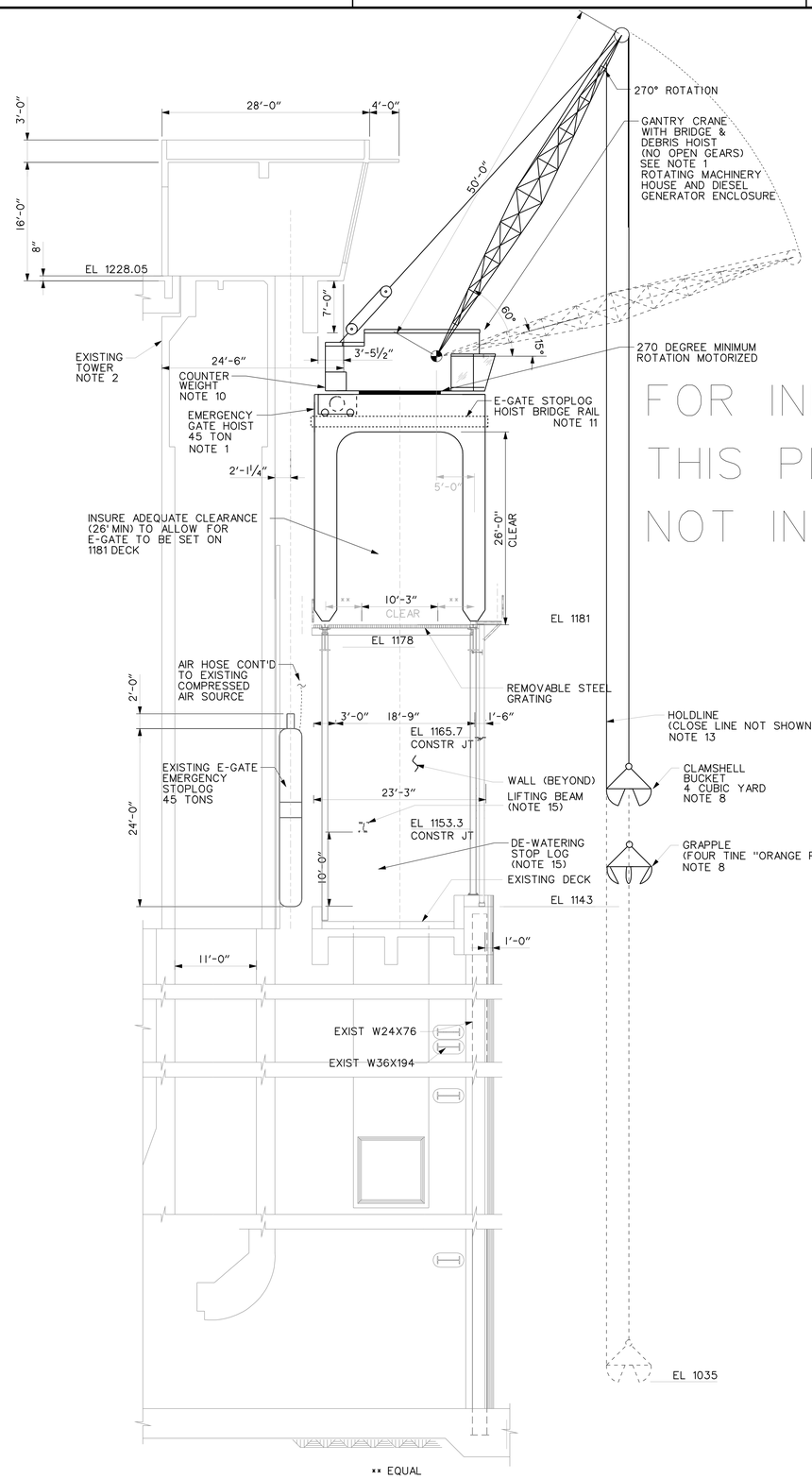

SECTION

SCALE: ⅛" = 1'-0"

E M-103 THRU M-113

NOTE: THIS SHEET FOR INFORMATION ONLY (GANTRY CRANE NIC)

FOR INFORMATION ONLY; THIS PLATE NOT IN CONTRACT

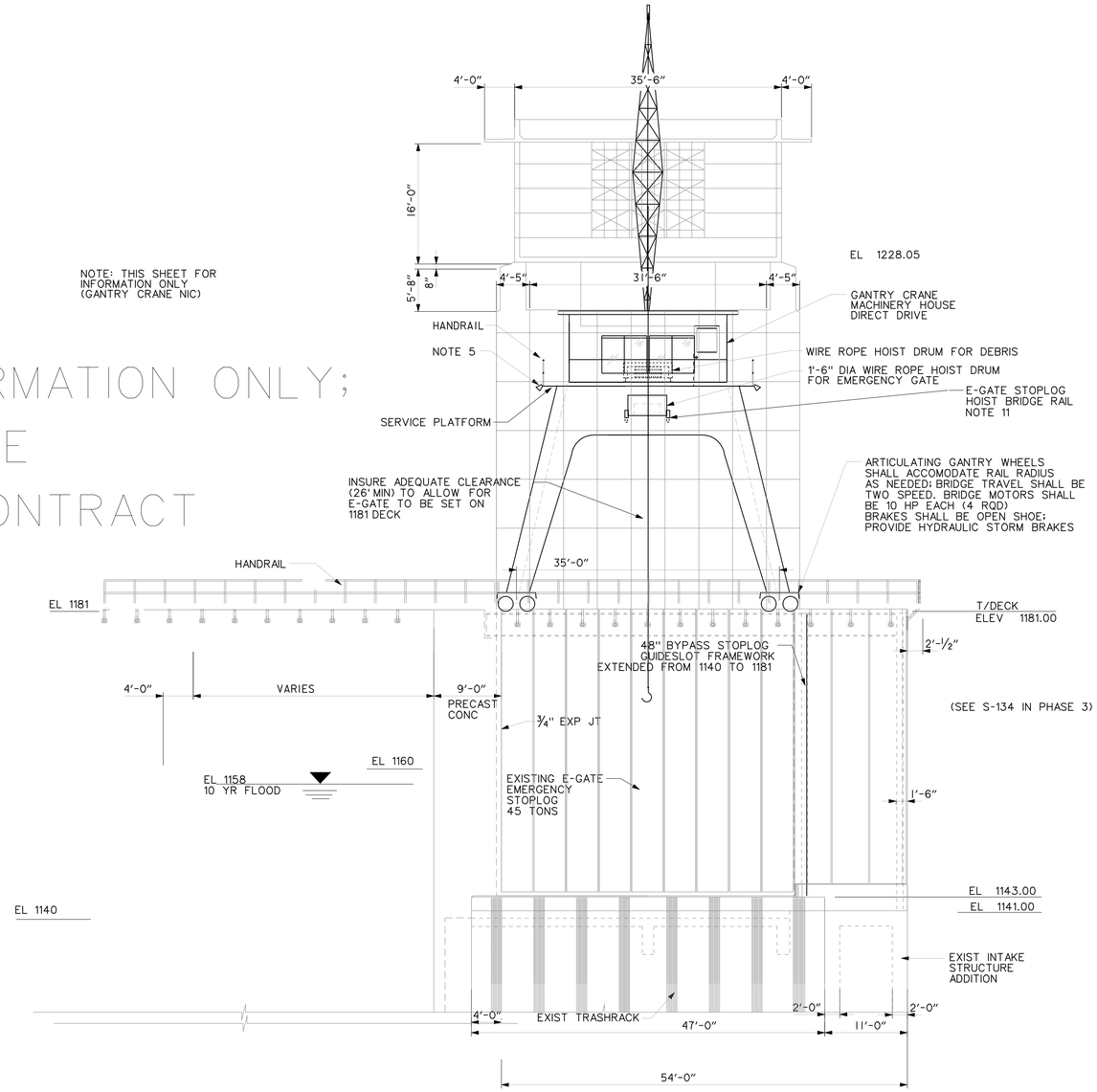

SOUTH ELEVATION (UPSTREAM)

SCALE: ⅛" = 1'-0"

F M-103 THRU M-113

NOTES:

1. DEBRIS HOIST MOTOR SHALL BE CAPABLE OF A 300 FPM LINE SPEED (APPROX 260 HP). DEBRIS HOIST SHALL BE VARIABLE SPEED (MAX 300 FPM, MIN PER MFR RECOMMENDATION).

E-GATE STOPLOG MOTOR SHALL BE TWO SPEED, 16/4 FPM (APPROX 40 HP) DEBRIS HOIST TRAVEL SHALL BE 162'; E-GATE HOIST TRAVEL SHALL BE 42 FEET. MOTORS SHALL BE HYDRAULIC.

2. MFR SHALL PROVIDE TRAVEL LIMIT SWITCHES TO PREVENT CONTACT WITH EXISTING INTAKE TOWER UNDER ALL CIRCUMSTANCES. TOWER ROTATION MAY BE SUBJECT TO FIELD VERIFICATION; UNDER NO CIRCUMSTANCES SHALL THE GANTRY ROTATION INTERFERE WITH THE EXISTING FLOOD REGULATING TOWER.

3. ALL HYDRAULIC SYSTEMS SHALL USE BIO-DEGRADABLE FLUID. SEE GANTRY SPEC.

NOTES CONT'D:

4. CRANE SHALL BE PROVIDED WITH "BELLY BOX" TYPE RADIO REMOTE CONTROL CAPABILITY.

5. PROVIDE 110V 4 DUPLEX RECEPTACLES AND FOUR 400W FLOODLIGHTS ON CRANE.

6. ALL MOTORS AND PANELS SHALL HAVE ANTI-CONDENSATION HEATERS.

7. ALL HOISTS SHALL FEATURE UPPER/LOWER LIMIT SWITCHES, OVERLOAD LIMIT, AND TRUE VERTICAL LIFT.

8. PROVIDE BOTH CLAMSHELL BUCKET AND GRAPPLE; SEE SPEC.

9. ELECTRICAL ENCLOSURES SHALL BE NEMA 4. MOTOR CONTROLS SHALL BE 480V BUS BAR HARD WIRED.

10. COUNTERWEIGHT SIZE AND CONFIGURATION SHALL BE DETERMINED BY CRANE MFR; MASS AND POSITION OF ENGINE GENERATOR MAY BE USED TO OFFSET OR REDUCE COUNTERWEIGHT SIZE.

11. E-GATE BRIDGE TRAVEL SHALL BE 12' MINIMUM; TROLLEY, FESTOON, ETC SHALL BE DETERMINED BY MFR.

12. GANTRY BOOM LOAD SHALL BE LIMITED USING A LOAD MOMENT INDICATOR; MAXIMUM BOOM LOAD SHALL BE 15,000 LBS AT 50 FEET. AT 25 FEET BOOM LENGTH, MAXIMUM BOOM LOAD SHALL BE 30,000 LBS. THE HOISTS SHALL BE EQUIPPED WITH FRICTION BRAKES CAPABLE OF RELEASING AN EXCESSIVE LOAD AS DETERMINED BY A LOAD MOMENT INDICATOR (LMI).

13. GRAPPLE ROPE SHALL BE NON ROTATING, SIZE IN ACCORDANCE WITH MFR'S RECOMMENDATION.

14. DIESEL FUEL TANK SHALL FEATURE SPILL AND OVERFILL PROTECTION, AND LOCAL AND REMOTE LEVEL INDICATION.

15. HEAVIEST DEWATERING STOPLOG (NIC) WEIGHS APPROX 57,800 LBS. LIFTING BEAM (NIC) WEIGHS APPROX 4850 LBS. ASSUME A 25% ALLOWANCE FOR STATIC FRICTION DUE TO SILT. TOTAL DE-WATERING HOIST CAPACITY SHALL BE 80,000 LBS - 40 TONS.

US Army Corps of Engineers Seattle District

Symbol	Description	Date	Appr.	Symbol	Description
		/ /			

Designed by: DJB
Drawn by: DJB
Checked by:
Date: 16 MAR 06
File: E-56-14-19
Rev.

U.S.ARMY ENGINEER DISTRICT, SEATTLE
CORPS OF ENGINEERS
SEATTLE, WASHINGTON
Prepared by:

ADDITIONAL WATER STORAGE PROJECT
HOWARD HANSON DAM
GANTRY CRANE ELEVATIONS
GREEN RIVER WASHINGTON

Plate number: M-330
Sheet of

DATE AND TIME PLOTTED: 07-AUG-2008 11:52 DESIGN FILE: I:\AECDESIGNS\HHAW\Mechanical\HHAWM-332e19.DGN

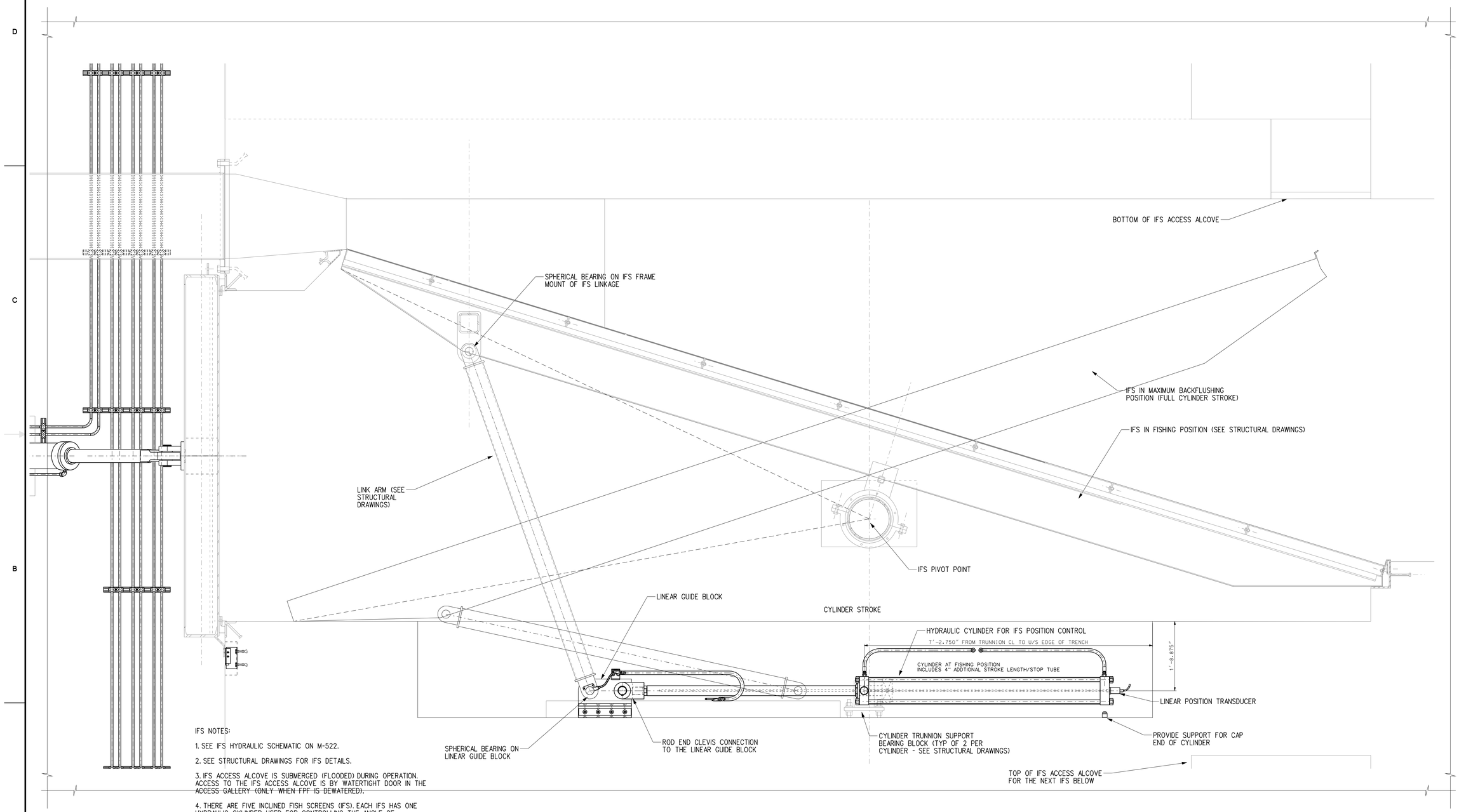

IFS NOTES:

1. SEE IFS HYDRAULIC SCHEMATIC ON M-522.

2. SEE STRUCTURAL DRAWINGS FOR IFS DETAILS.

3. IFS ACCESS ALCOVE IS SUBMERGED (FLOODED) DURING OPERATION. ACCESS TO THE IFS ACCESS ALCOVE IS BY WATERTIGHT DOOR IN THE ACCESS GALLERY (ONLY WHEN FPF IS DEWATERED).

4. THERE ARE FIVE INCLINED FISH SCREENS (IFS). EACH IFS HAS ONE HYDRAULIC CYLINDER USED FOR CONTROLLING THE ANGLE OF ROTATION OF THE IFS.

5. IFS IS HELD IN FISHING POSITION BY MAINTAINING PRESSURE IN THE HYDRAULIC CYLINDER. ENSURE THAT NO GAP EXISTS BETWEEN THE TOP OF THE SCREEN AND THE STRUCTURAL SUPPORTS (GUIDEWALLS, BYPASS ENTRANCE) DURING FISH PASSAGE OPERATION.

6. IFS SHALL BE SET TO HORIZONTAL POSITION (SCREEN AT 0°) WHEN FACILITY IS NOT OPERATIONAL.

7. EACH IFS HYDRAULIC CYLINDER SHALL BE PROVIDED WITH A LINEAR POSITION TRANSDUCER WHICH SHALL CONTINUOUSLY FEED CYLINDER POSITION BACK TO THE PLC. SEE SCHEDULE FOR DETAILS.

8. HYDRAULIC LINE PENETRATIONS THROUGH CONCRETE SHALL BE CONSTRUCTED IN SUCH A WAY THAT THE HYDRAULIC LINES ARE SHIELDED FROM THE CONCRETE AND ARE NOT DIRECTLY EMBEDDED WITHIN THE CONCRETE.

X / M-304 DETAIL

1" = 1'-0" 12"9" 6" 3" 0 1' 2'

US Army Corps of Engineers
Seattle District

Symbol	Description	Date	Appr.	Symbol	Description
		/ /			

Designed by: EC
Drawn by: EC
Checked by: X
Date: 16 MAR 06
File # E-56-14-19
Rev.

U.S.ARMY ENGINEER DISTRICT,SEATTLE
CORPS OF ENGINEERS
SEATTLE, WASHINGTON
Prepared by:

ADDITIONAL WATER STORAGE PROJECT
HOWARD HANSON DAM
IFS VIEWS
GREEN RIVER WASHINGTON

Plate number:
M-501
Sheet of

DATE AND TIME PLOTTED: 07-AUG-2008 12:01 DESIGN FILE: I:\AECDESIGNS\HHAW\Mechanical\HHAWM-501GEN.DGN

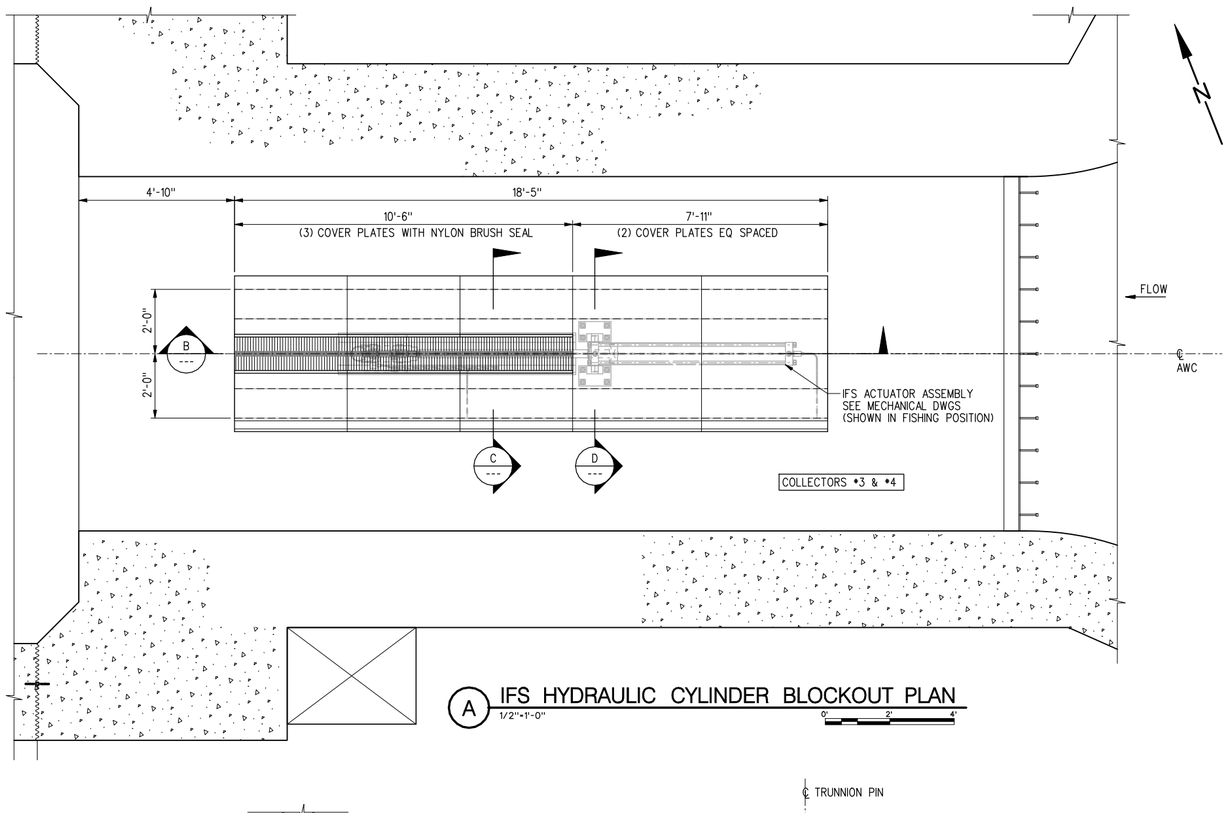

A IFS HYDRAULIC CYLINDER BLOCKOUT PLAN
1/2"=1'-0"

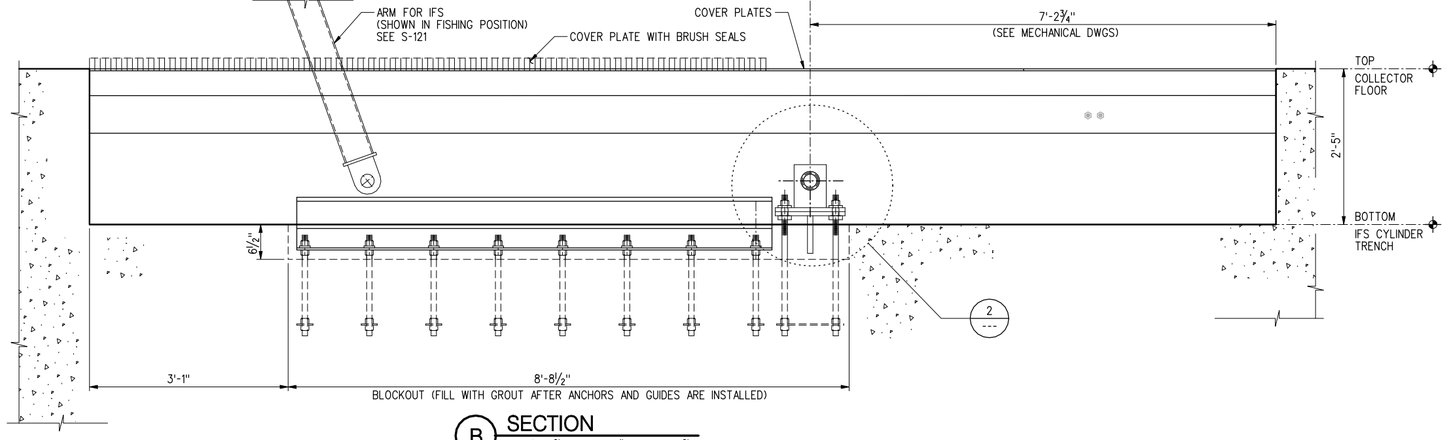

B SECTION
1"=1'-0"

NOTES:

1. INCLINED FISH SCREEN ASSEMBLY INCLUDING HYDRAULIC ACTUATORS FOR COLLECTOR #3 AND #4 AS SHOWN ON DETAILS.
2. FOR COLLECTORS #1, #2, AND #5 INSTALL EMBEDDED ANCHORAGE ONLY FOR HYDRAULIC ACTUATORS AND COVER PLATES TO BE INSTALLED IN A FUTURE CONTRACT.

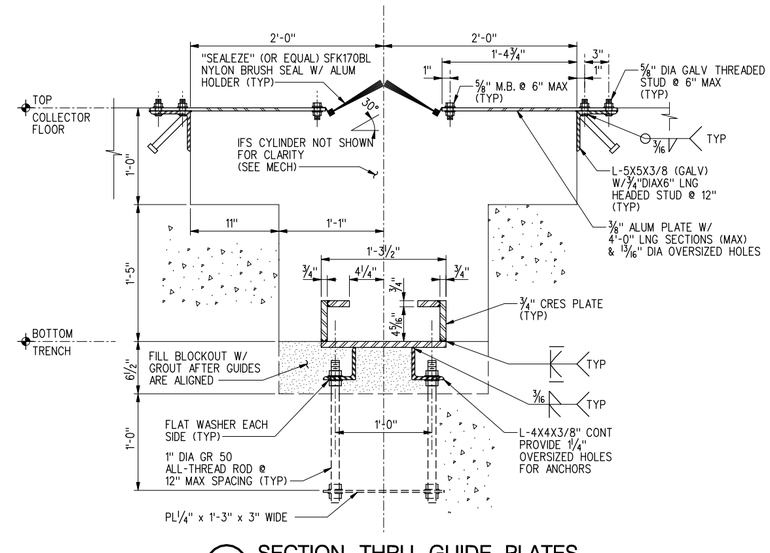

C SECTION THRU GUIDE PLATES
1½"=1'-0"

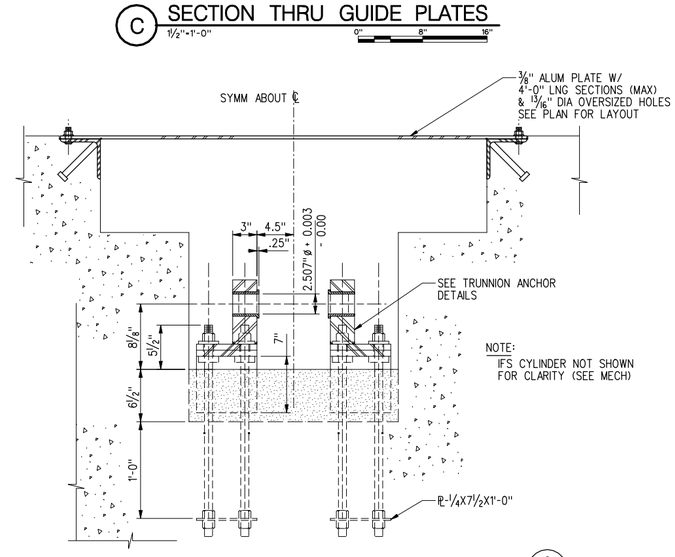

D SECTION THRU TRUNNION
1½"=1'-0"

SEE C FOR CALLOUTS NOT SHOWN ON THIS SECTION

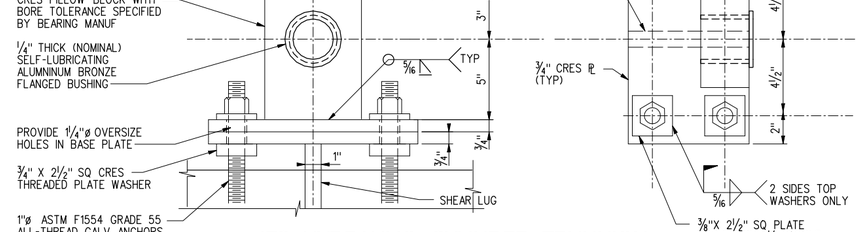

2 IFS HYDRAULIC CYLINDER TRUNNION ANCHORAGE DETAILS
3"=1'-0"

US Army Corps of Engineers
Seattle District

Symbol	Description	Appr.	Date
			/ /

Designed by:
Drawn by:
Checked by:
Prepared by:
Date: 16 MAR 06
File #: E-56-14-19
Rev.

U.S.ARMY ENGINEER DISTRICT,SEATTLE
CORPS OF ENGINEERS
SEATTLE, WASHINGTON

ADDITIONAL WATER STORAGE PROJECT
HOWARD HANSON DAM
GREEN RIVER

IFS HYDRAULIC CYLINDER
SUPPORT DETAILS

WASHINGTON

Plate number:
S-120
Sheet of

DESIGN FILE: P:\AECDesigns\HHAW\Structural\HHAWS_ts-120.DGN
DATE AND TIME PLOTTED: 8/6/2008 12:01:19 PM

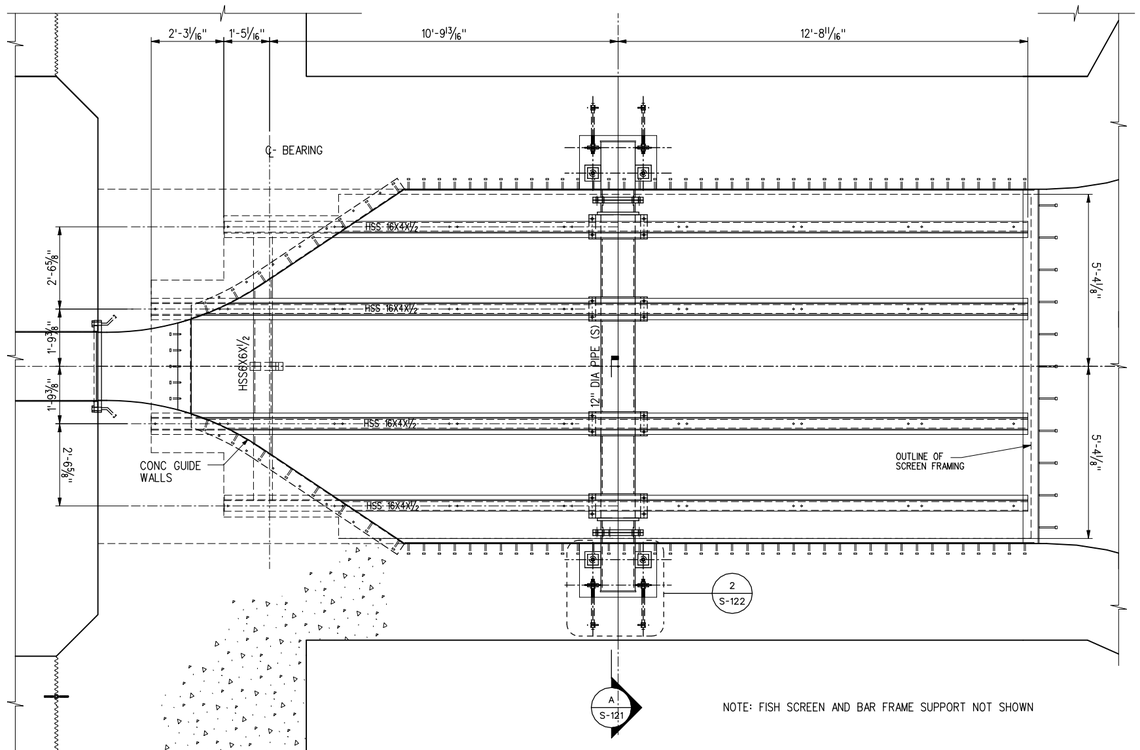

NOTE: FISH SCREEN AND BAR FRAME SUPPORT NOT SHOWN

INCLINED FISH SCREEN (IFS) FRAMING PLAN (IN HORIZONTAL POSITION)

SCALE: 1/2"=1'-0"

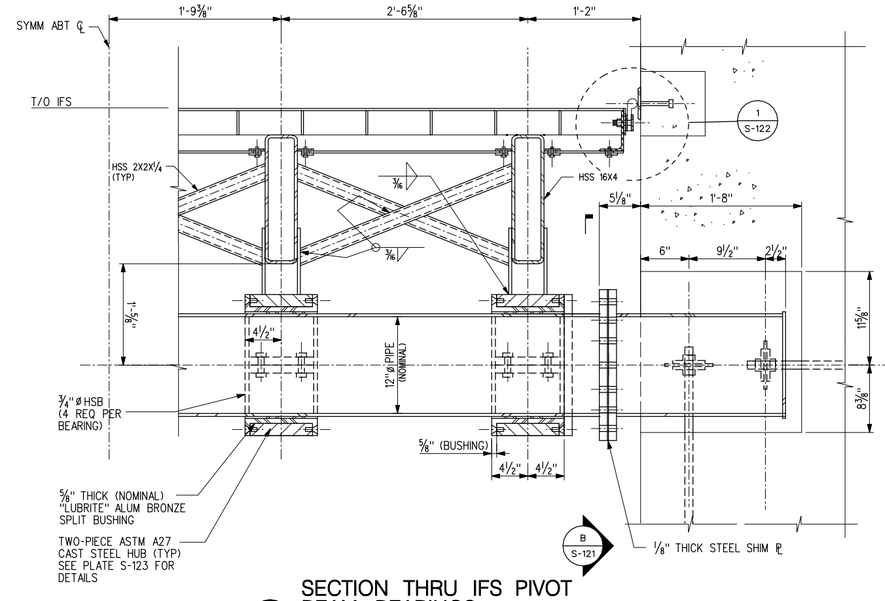

A SECTION THRU IFS PIVOT BEAM BEARINGS

SCALE: 1/2"=1'-0"

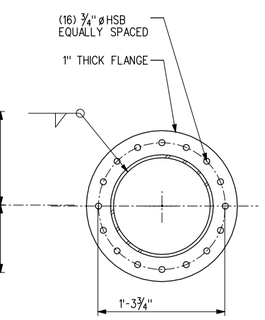

B PIPE FLANGE CONNECTION

1/2"=1'-0"

SECTION THRU INCLINED SCREEN FRAME

SCALE: 1/2"=1'-0"

BACKING PLATE SCHEDULE				
BACKING PLATE	POROSITY	THICKNESS (INCHES)	LENGTH	MATERIAL
1	0.33	0.375	3'-4 3/4"	TYPE 304 SS
2	0.33	0.375	3'-4 3/4"	TYPE 304 SS
3	0.23	0.313	3'-4 3/4"	TYPE 304 SS
4	0.23	0.313	3'-4 3/4"	TYPE 304 SS
5	0.23	0.313	3'-4 3/4"	TYPE 304 SS
6	0.15	0.313	3'-4 3/4"	TYPE 304 SS

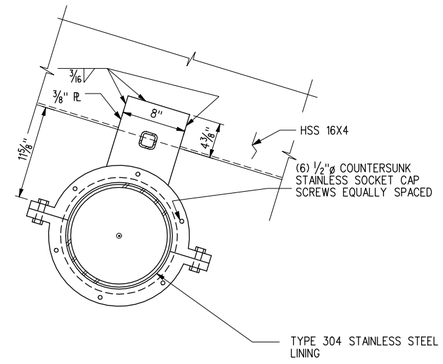

NOTE: SEE PLATE S-123 FOR ADDITIONAL INFO

1 BEARING DETAIL

SCALE: 1/2"=1'-0"

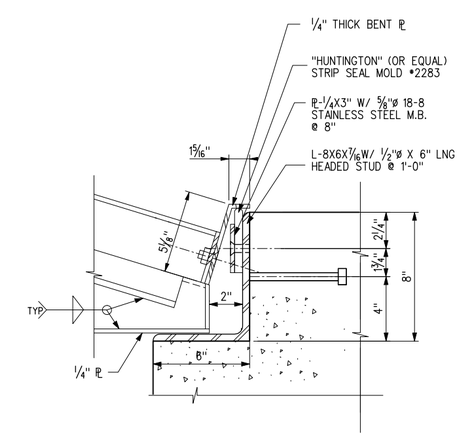

2 EDGE DETAIL

SCALE: 3"=1'-0"

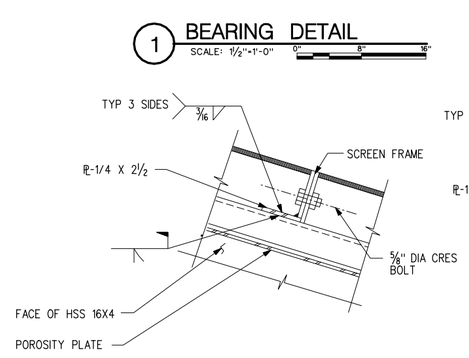

PROFILE BARS ORIENTED PERPENDICULAR TO FLOW

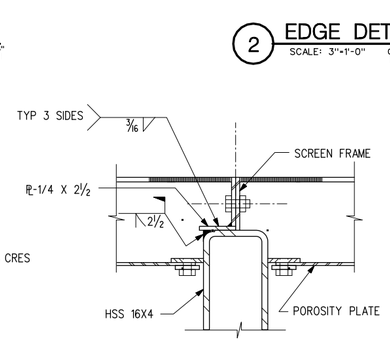

PROFILE BARS ORIENTED PARALLEL TO FLOW

3 TYPICAL SCREEN FRAME ANCHORAGE DETAILS

SCALE: 3"=1'-0"

US Army Corps of Engineers
Seattle District

Symbol	Description	Appr.	Date
			/ /

Designed by: BN
Drawn by: BN
Checked by:
Date: 16 MAR 06
File #: E-56-14-19
Rev.

U.S.ARMY ENGINEER DISTRICT,SEATTLE
CORPS OF ENGINEERS
SEATTLE, WASHINGTON
Prepared by:

ADDITIONAL WATER STORAGE PROJECT
HOWARD HANSON DAM
INCLINED FISH SCREEN
PLAN, SECTIONS & DETAILS - I
GREEN RIVER WASHINGTON

Plate number:
S-121
Sheet of

DESIGN FILE: I:\AECDesigns\HHAW\Structural\HHAWS-Ts-121.DGN
DATE AND TIME PLOTTED: 8/6/2008 12:01:30 PM

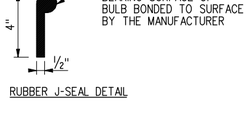

RUBBER J-SEAL DETAIL

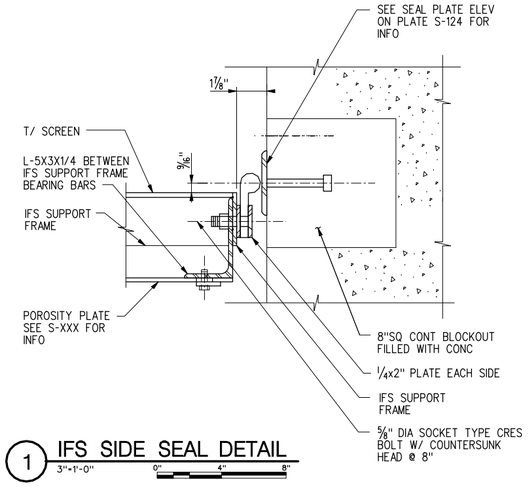

1 IFS SIDE SEAL DETAIL
3"=1'-0"

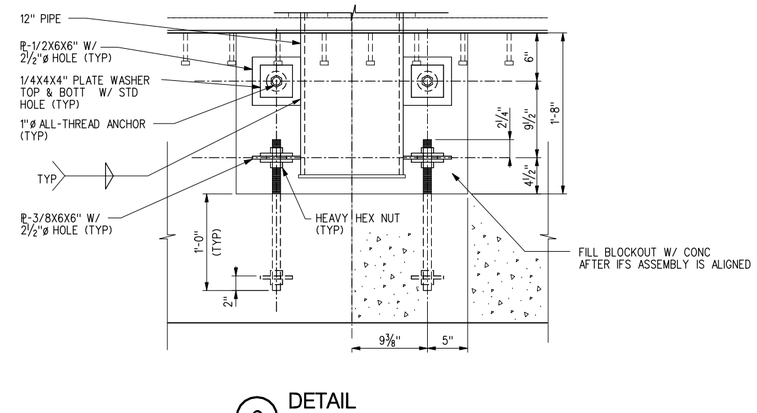

2 DETAIL
1½"=1'-0"

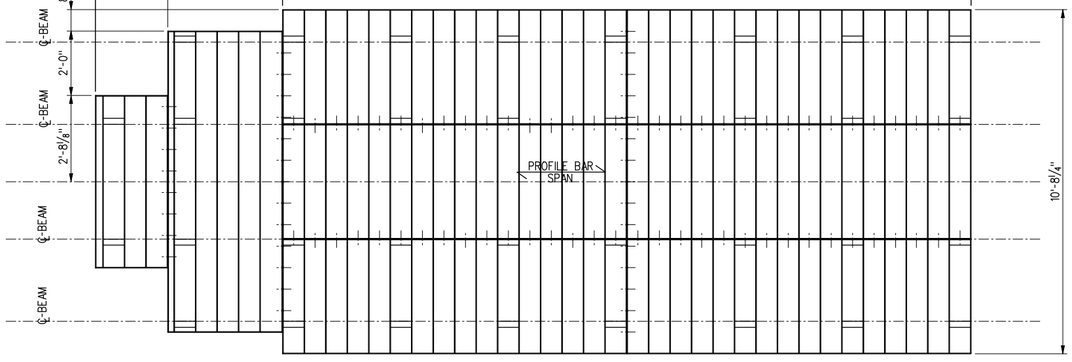

FRAME ORIENTATION FOR PARALLEL TO FLOW SCREEN PROFILE BARS

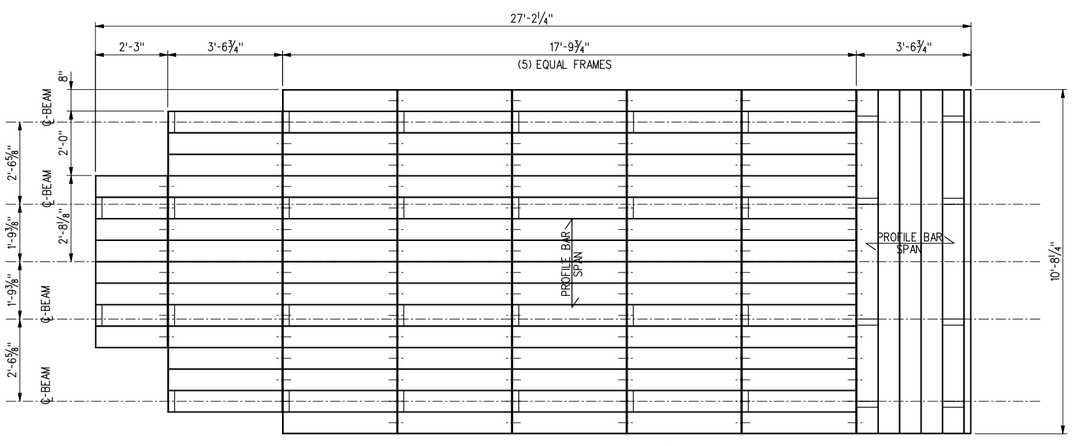

FRAME ORIENTATION FOR PERPENDICULAR TO FLOW SCREEN PROFILE BARS

¼"X3" STEEL FLAT BAR @ 8"

3 FISH SCREEN SUPPORT FRAMING PLANS
½" = 1'-0"

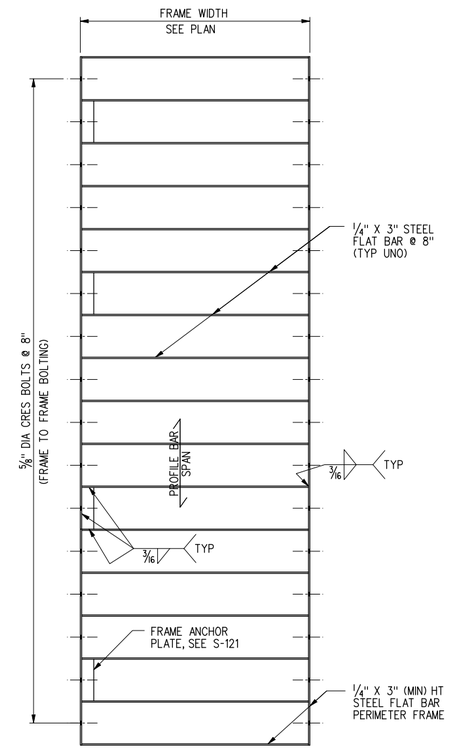

4 TYPICAL FRAME MODULE FOR SCREEN PROFILE BARS PERPENDICULAR TO FLOW
1"=1'-0"

NOTE: SEE FISH SCREEN SUPPORT FRAMING PLANS FOR ADDITIONAL ANCHORS REQUIRED FOR PARALLEL TO FLOW SCREEN PROFILE BARS

US Army Corps of Engineers
Seattle District

Symbol	Description	Appr.	Symbol	Description
		/ /		
		Date		

Designed by:
Drawn by: BN
Checked by:
Prepared by:
Date: 16 MAR 06
File #: E-56-14-19
Rev.

U.S.ARMY ENGINEER DISTRICT,SEATTLE
CORPS OF ENGINEERS
SEATTLE, WASHINGTON

ADDITIONAL WATER STORAGE PROJECT
HOWARD HANSON DAM
INCLINED FISH SCREEN PLAN
SECTIONS & DETAILS II
GREEN RIVER WASHINGTON

Plate number:
S-122
Sheet of

DESIGN FILE: I:\AECDesigns\HHAW\Structural\HHAWS_ts-122.DGN
DATE AND TIME PLOTTED: 8/6/2008 12:01:42 PM

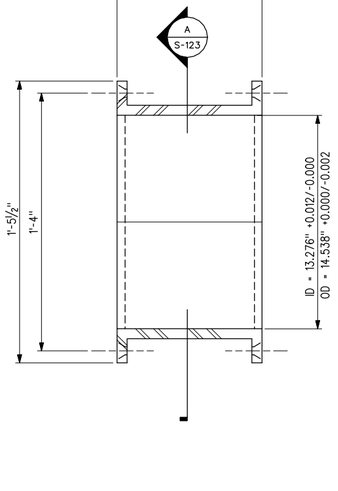

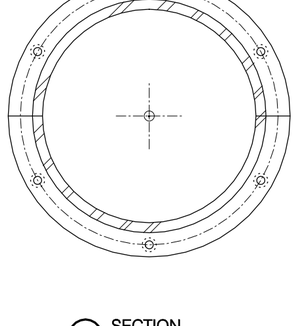

A SECTION

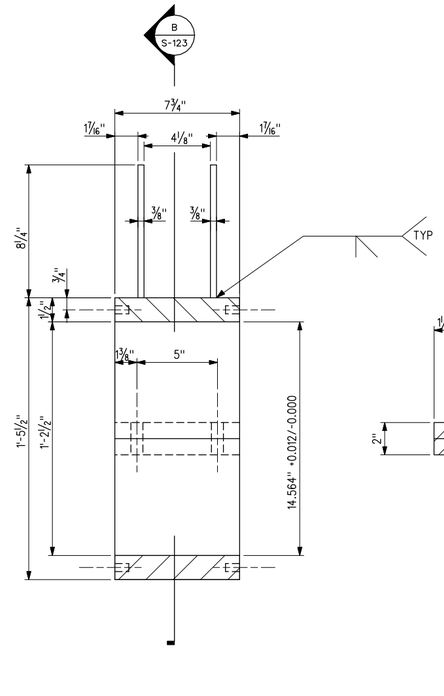

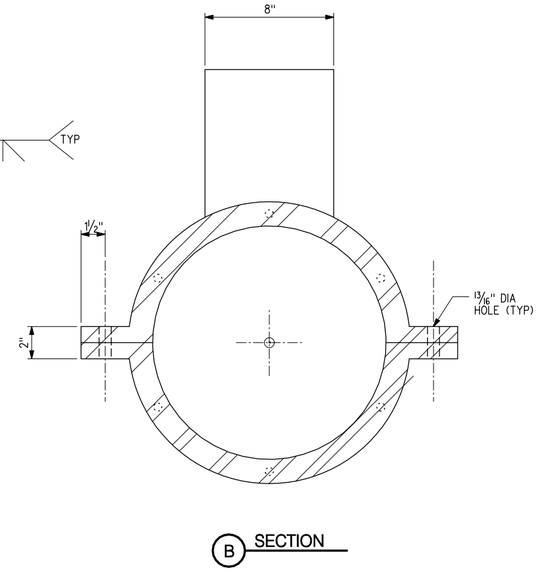

B SECTION

1 BEARING DETAILS

SCALE: 3"=1'-0"

NOTE: BEARING SHALL BE SPLIT TYPE CONFORMING TO ALUMINUM BRONZE ("LUBRITE" ALLOY #417 OR EQUAL)

2 HUB DETAILS

SCALE: 3"=1'-0"

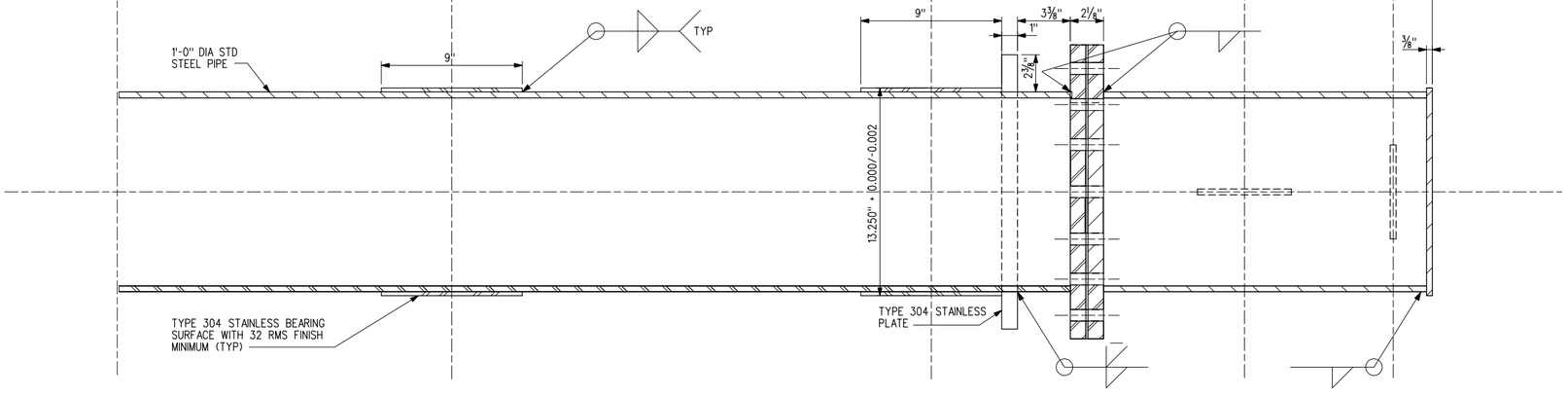

PIVOT BEAM SECTION

SCALE: 3"=1'-0"

US Army Corps of Engineers
Seattle District

Symbol	Description	Appr.	Symbol	Description
			/ / Date	

Designed by: BN
Drawn by: BN
Checked by:
Date: 16 MAR 06
File #: E-56-14-19
Rev.

U.S. ARMY ENGINEER DISTRICT, SEATTLE
CORPS OF ENGINEERS
SEATTLE, WASHINGTON
Prepared by:

ADDITIONAL WATER STORAGE PROJECT
HOWARD HANSON DAM
INCLINED FISH SCREEN
PLAN, SECTIONS
& DETAILS - III
GREEN RIVER WASHINGTON

Plate number:
S-123
Sheet of

DESIGN FILE: I:\AECDesigns\HHAW\Structural\HHAWS-fs-123.DGN
DATE AND TIME PLOTTED: 8/6/2008 12:01:50 PM

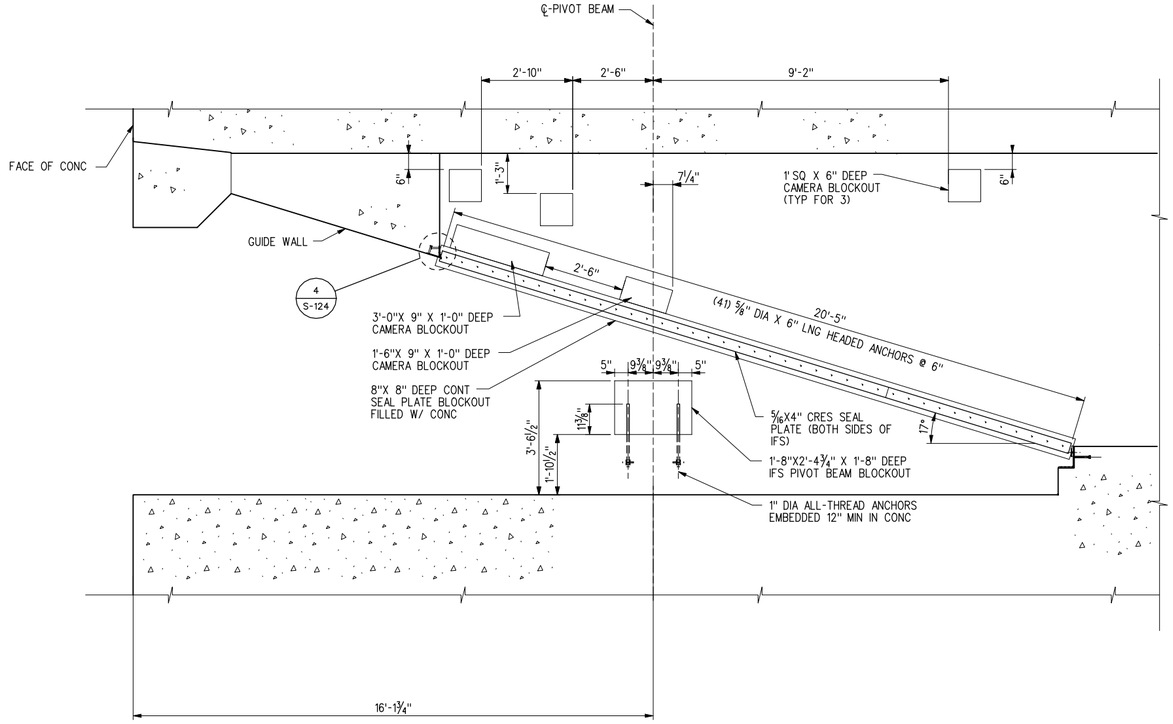

TYPICAL IFS SIDE SEAL PLATE ANCHORAGE AND BLOCKOUT DETAIL

½"=1'-0"

NOTE: CAMERA BLOCKOUTS SHALL BE PROVIDED IN EACH COLLECTOR AT ONE SIDE OF IFS ONLY

A SECTION

3"=1'-0"

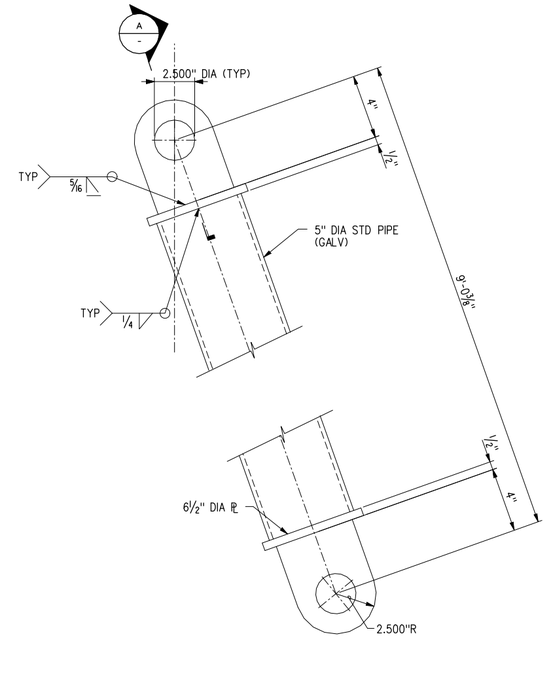

1 LINK ARM DETAIL

3"=1'-0"

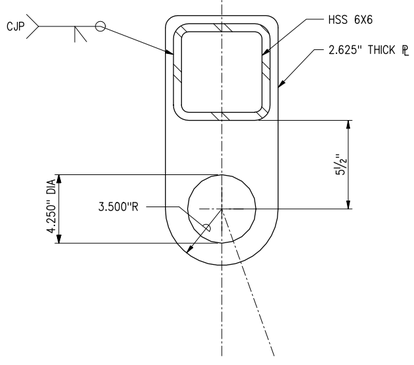

2 DETAIL

3"=1'-0"

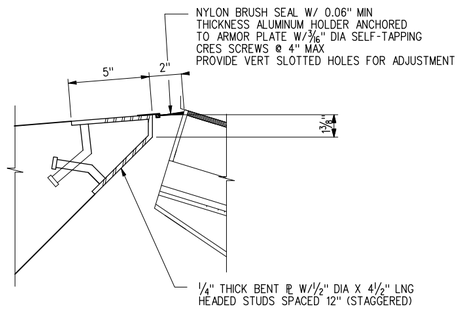

3 EDGE DETAIL

3"=1'-0"

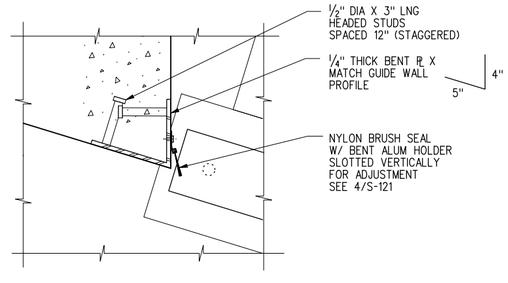

4 BRUSH SEAL DETAIL AT GUIDEWALL

3"=1'-0"

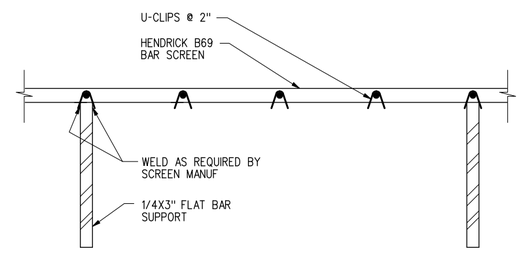

5 FISH SCREEN DETAIL

NONE

US Army Corps of Engineers
Seattle District

Symbol	Description	Appr.	Symbol	Description
		/ / Date		

Designed by: BN
Drawn by: BN
Checked by:
Date: 16 MAR 06
File # E-56-14-19
Rev.

U.S. ARMY ENGINEER DISTRICT, SEATTLE
CORPS OF ENGINEERS
SEATTLE, WASHINGTON
Prepared by:

ADDITIONAL WATER STORAGE PROJECT
HOWARD HANSON DAM
INCLINED FISH SCREEN
DETAILS
GREEN RIVER WASHINGTON

Plate number:
S-124
Sheet of

DESIGN FILE: P:\AECDesigns\HHAW\Structural\HHAWS_ts-124.DGN
DATE AND TIME PLOTTED: 8/6/2008 12:01:53 PM

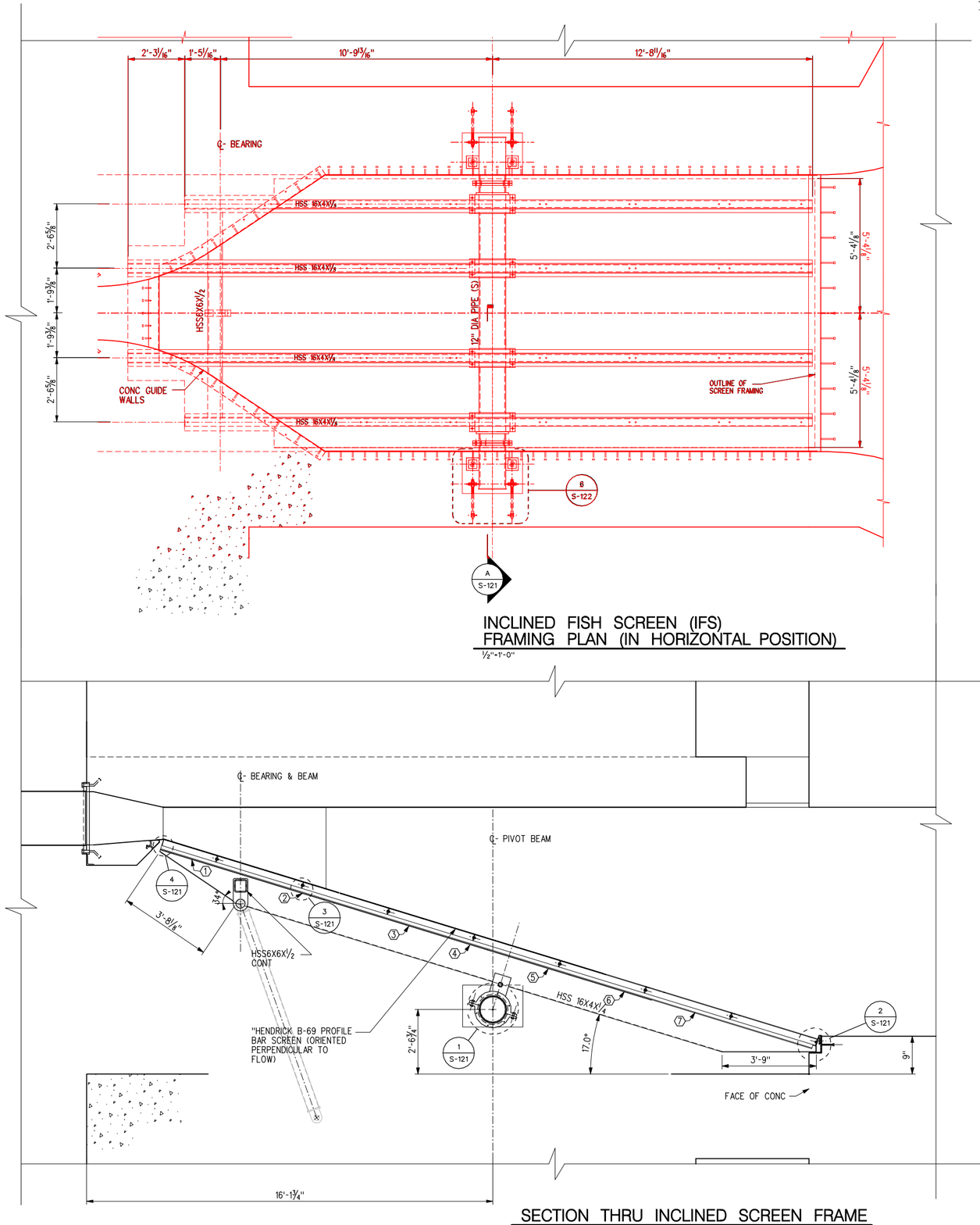

INCLINED FISH SCREEN (IFS) FRAMING PLAN (IN HORIZONTAL POSITION)

1/2"=1'-0"

SECTION THRU INCLINED SCREEN FRAME

1/2"=1'-0"

(X) PERFORATED PLATE NUMBER SEE SCHEDULE ON SHEET S-XXX FOR ADDITIONAL INFO

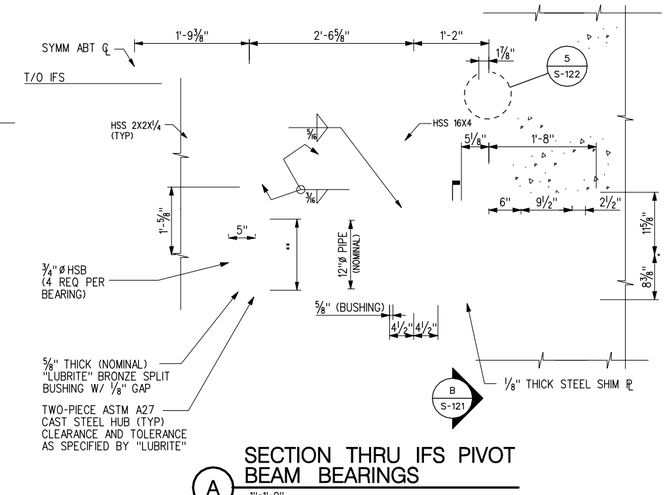

A SECTION THRU IFS PIVOT BEAM BEARINGS

1"=1'-0"

** 9" WIDE TYPE 304 STAINLESS STEEL LINING WELDED TO PIPE & MACHINED TO OVERALL O.D. = 13.25 ± 0.002" RMS = 32

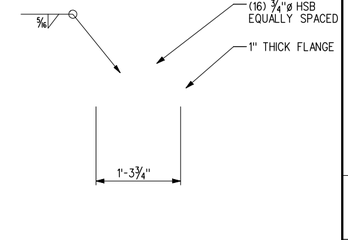

B PIPE FLANGE CONNECTION

1"=1'-0"

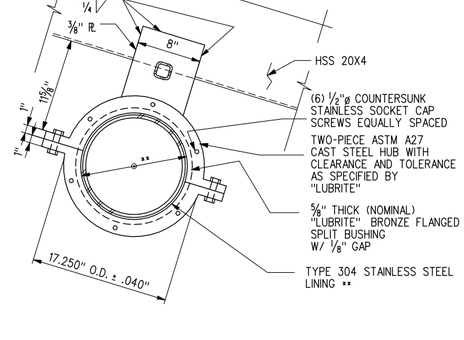

1 BEARING DETAIL

1 1/2"=1'-0"

** 9" WIDE TYPE 304 STAINLESS STEEL LINING WELDED TO PIPE & MACHINED TO OVERALL O.D. = 13.25 ± 0.002" RMS = 32

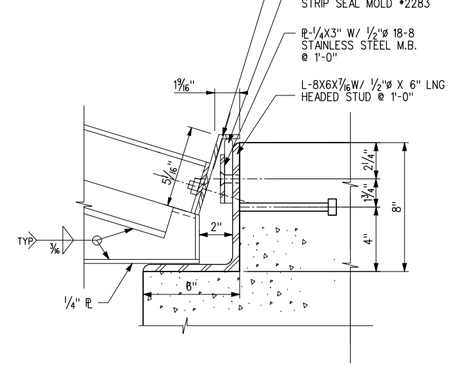

2 EDGE DETAIL

3"=1'-0"

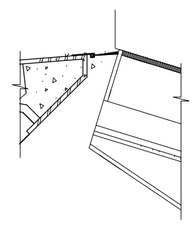

3 TYPICAL SCREEN BEARING BAR SUPPORT DETAIL

3"=1'-0"

4 EDGE DETAIL

3"=1'-0"

US Army Corps of Engineers
Seattle District

Symbol	Description	Appr.	Date
			/ /

Designed by: BN
Drawn by: BN
Checked by:
Date: 16 MAR 06
File #: E-56-14-19
Rev.

U.S. ARMY ENGINEER DISTRICT, SEATTLE
CORPS OF ENGINEERS
SEATTLE, WASHINGTON
Prepared by:

ADDITIONAL WATER STORAGE PROJECT
HOWARD HANSON DAM
INCLINED FISH SCREEN
PLAN, SECTIONS & DETAILS
GREEN RIVER WASHINGTON

Plate number:
S-121
Sheet of

FILE: I:\AECDesigns\HHAW\Structural\HHAWS-fs-124.DGN
DATE AND TIME PLOTTED: 8/6/2008 12:01:59 PM
DESIGN FILE:

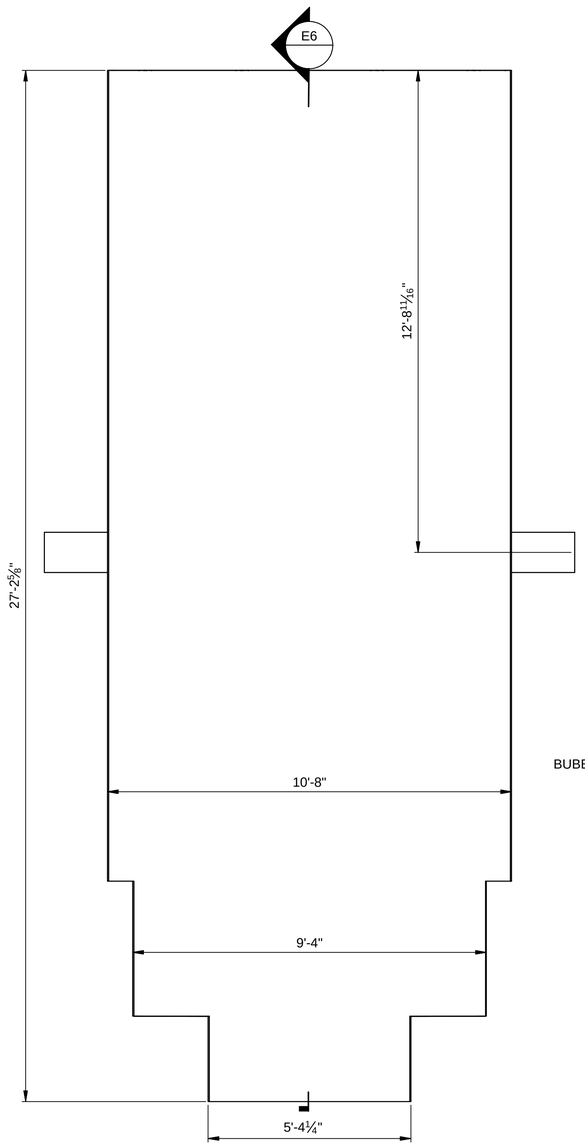

B1 PLAN VIEW - MIS FISH SCREEN
SCALE: 1:24

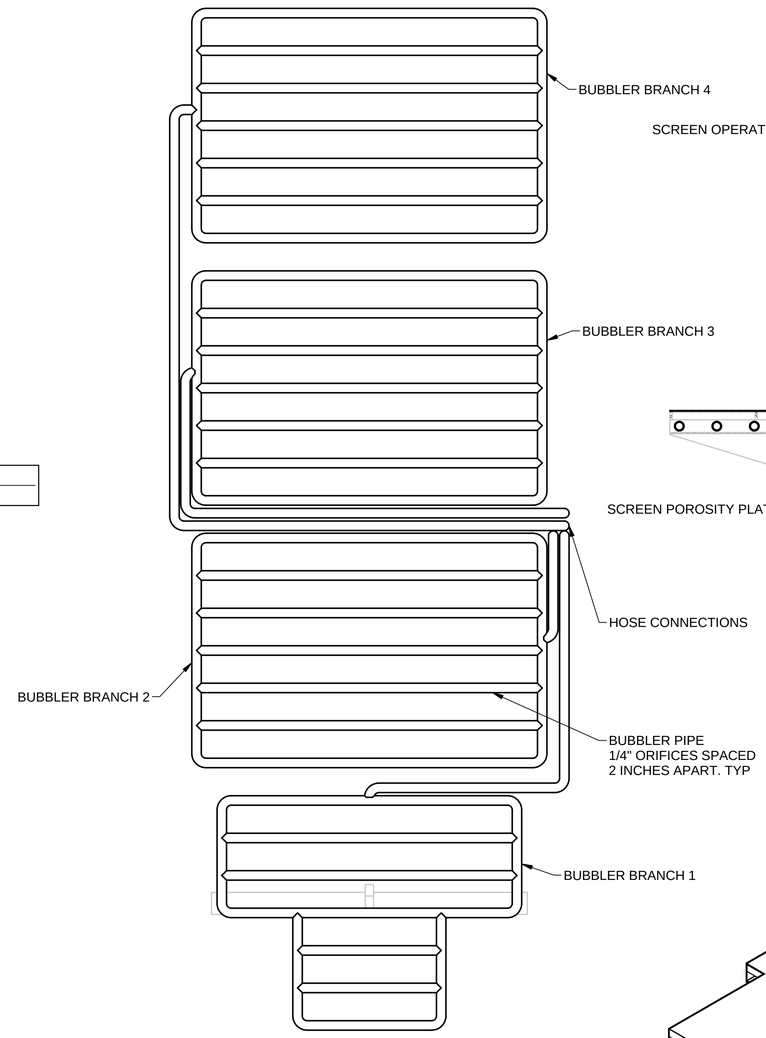

B4 PLAN VIEW - MIS SCREEN PIPING ARRANGEMENT
SCALE: 1:24

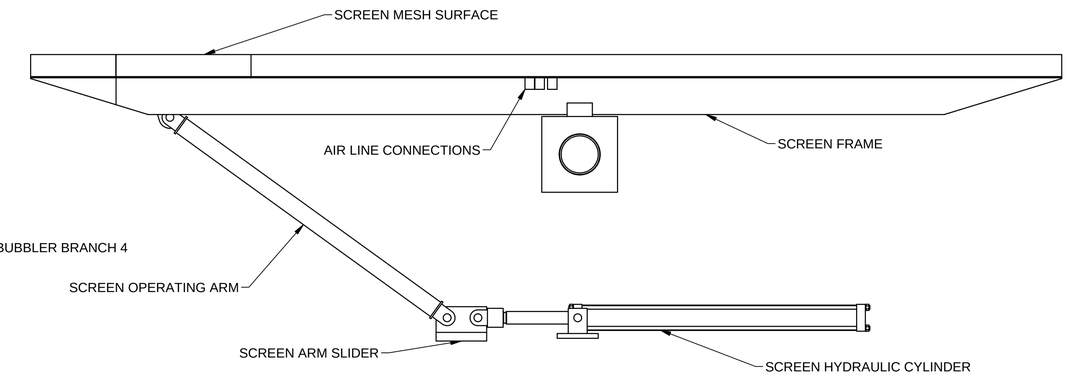

F6 MIS SCREEN EQUIPMENT ARRANGEMENT
SCALE: 1:24

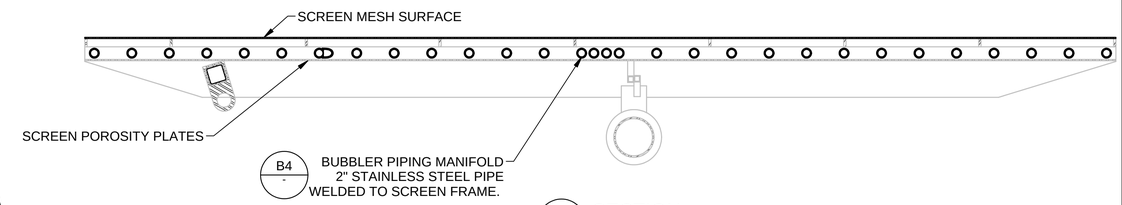

E6 SECTION
SCALE: 1:24

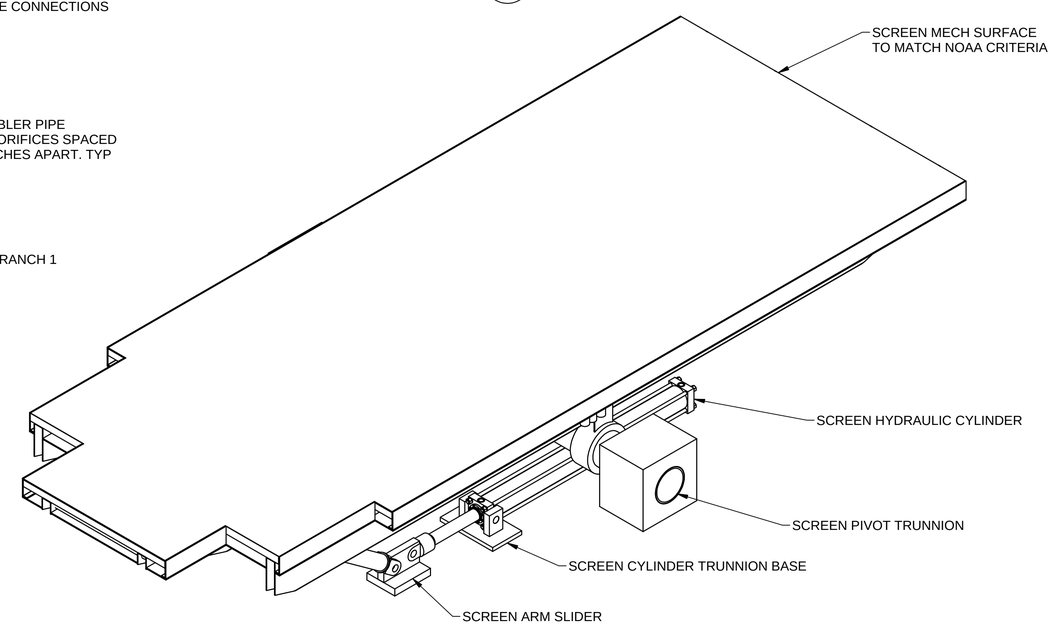

B6 ISOMETRIC - MIS SCREEN ARRANGEMENT
SCALE: NTS

NOTES:

1. 5 SCREEN ASSEMBLIES REQUIRED
2. MATERIAL - TYPE 304 STAINLESS STEEL
3. SCREEN WEIGHT - APPROXIMATELY 15,0000 LBF EACH
4. SCREEN FRAME HYDROSTATIC RATING - 10 FT.

US Army Corps of Engineers ®

MARK	DESCRIPTION	DATE

ISSUE DATE: MMMMMMMMM YYYY
SOLICITATION NO.: XXXXXX-XX-X-XXXX
CONTRACT NO.: XXXXXX-XX-X-XXXX
PROJECT CODE:

DESIGNED BY:
DRAWN BY:
CHECKED BY:
SUBMITTED BY:
SIZE: ANSI D

U.S. ARMY CORPS OF ENGINEERS
XXXXXXXXX DISTRICT
STREET ADDRESS
CITY, STATE, ZIP

PROJECT/CONTRACT LOCATION
PROJECT/CONTRACT DESCRIPTION
PROJECT NUMBER

HOWARD HANSON DAM
FISH PASSAGE FACILITY
MIS SCREEN

SHEET ID
M-002

STATUS

Parker Hannifin Corporation
Cylinder Division
500 South Wolf Road
Des Plaines, IL 60016 USA
Phone: 847 298 2400
Fax: 847 294 2655

ENGINEERING YOUR SUCCESS.

PARKER Cylinder
2H/3H / 2HD/3HD / 2HB/3HB / 2HX/3HX / 2HDX/3HDX / 2HBX/3HBX

2H/3H / 2HD/3HD / 2HB/3HB / 2HX/3HX / 2HDX/3HDX / 2HBX/3HBX Heavy Duty Hydraulic Cylinder

Model Number: 7.00CD3HKNFT248AC84.000

Interactive 3D graphic, click to activate and rotate

Parker's customizable, full-featured, precision Heavy Duty 3000* psi NFPA Hydraulic Cylinders offer unprecedented Tie-Rod and Non Tie-Rod design choices, along with four easily interchangeable piston seal options for maximum performance.

- Heavy Duty Service - ANSI/(NFPA) T3.6.7R3 - 2009
- Nominal Pressure Rating - 3000* psi.
- Bore Diameters - 1.50" through 20.00"
- Piston Rod Diameters - 0.625" through 10.00"
- Square Head Design - for maximum flexibility and serviceability
- Mounting Styles - 19 standard mounts to adapt to your application
- Universal Piston Design - with 4 different seal configurations to satisfy any demand
- Strokes - available in any practical stroke length
- Cushions - captive design, optional at either end or both ends of stroke
- Rod Ends - four standard choices with specials to the order
- Global Design Support – for service to you and your customer around the world

*Pressure deratings may apply for mounting, length, or other features. Please see catalog for specific rating information.

http://www.parker.com/Literature/Industrial%20Cylinder/cylinder/cat/english/Gen%20II_HY08-1314-1_NA_2H_3H_Family.pdf

For more information on cylinder safety, go to the Cylinder Division Products Safety Guide on http://www.parker.com/safety

PDF Datasheet Powered by CADENAS PARTsolutions

NOTES

- Piston - K - KP Filled PTFE Piston Seal
- Gland/Seal - F - Gland with Dual PTFE Rod Seals and PTFE Wiperseal
- Seals - Water Based Fluids (Class 2)
- Low Friction Gland
- Valve & Feedback Code - N/A

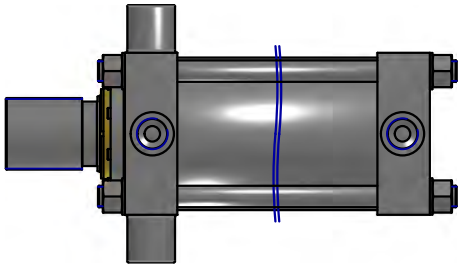

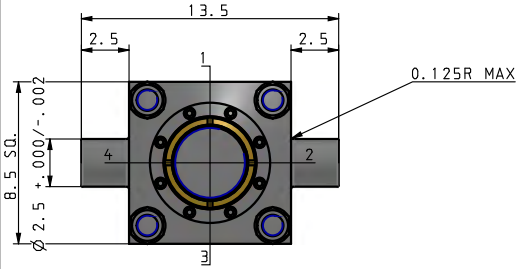

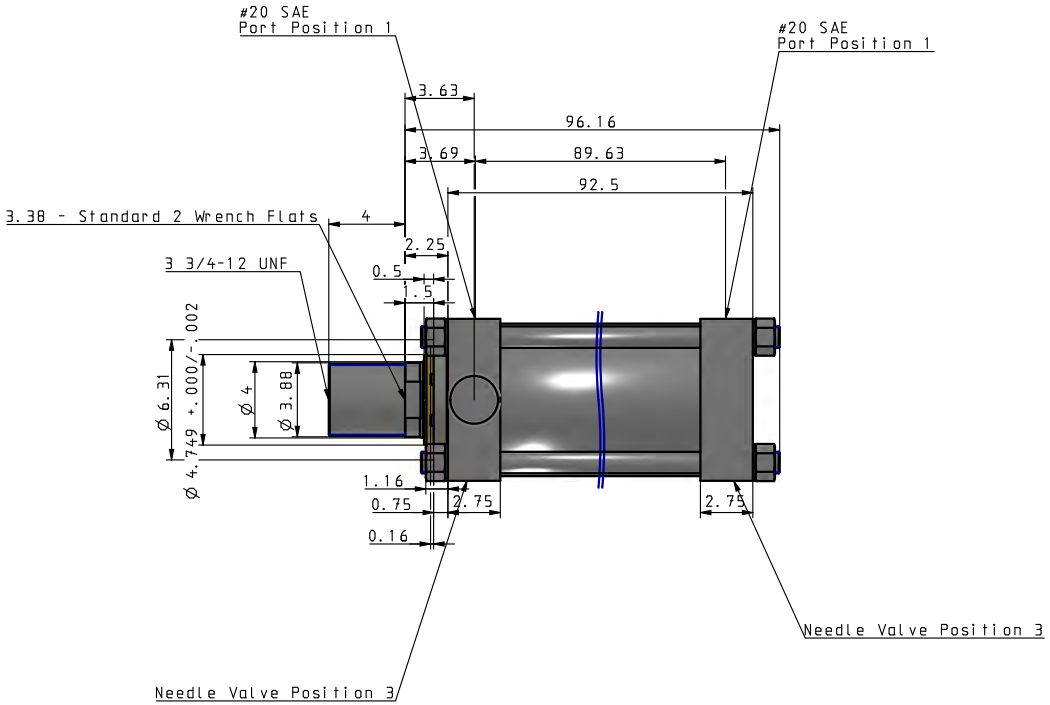

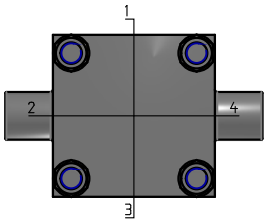

THIS DOCUMENT AND THE INFORMATION IT CONTAINS IS CONFIDENTIAL AND PROPRIETARY TO PARKER HANNIFIN CORPORATION AND ITS AFFILIATES ("PARKER"), MAY NOT BE COPIED OR DISCLOSED TO OTHERS OR USED FOR ANY PURPOSE OTHER THAN CONDUCTING BUSINESS WITH PARKER, AND MUST BE RETURNED OR DESTROYED AND ALL FURTHER USE DISCONTINUED AT PARKER'S REQUEST. THE RECIPIENT OF THIS DOCUMENT IS ADVISED THAT IMPROPER SELECTION OR IMPROPER USE OF PARKER SYSTEMS OR COMPONENTS CAN CAUSE DEATH, PERSONAL INJURY AND PROPERTY DAMAGE, AND IS SOLELY RESPONSIBLE THROUGH ITS OWN ANALYSIS AND TESTING FOR THE FINAL SELECTION OF PARKER SYSTEM AND COMPONENTS AND ASSURING THAT ALL PERFORMANCE, ENDURANCE, MAINTENANCE, SAFETY AND WARNING REQUIREMENTS OF THE INTENDED APPLICATION ARE MET. COPYRIGHT PARKER. YEAR OF COPYRIGHT IS THE YEAR(S) INDICATED ON THIS DOCUMENT. ALL RIGHTS RESERVED.

⚠ **WARNING**: FAILURE OR IMPROPER SELECTION OR IMPROPER USE OF THE PRODUCTS DESCRIBED HEREIN OR RELATED ITEMS CAN CAUSE DEATH, PERSONAL INJURY AND PROPERTY DAMAGE. The user, through its own analysis and testing, is solely responsible for making the final selection of the system and components and assuring that all performance, endurance, maintenance, safety and warning requirements of the application are met. For more information on cylinder safety, go to the Cylinder Division Products Safety Guide on http://www.parker.com/safety

Parker

Model#
7.00CD3HKNFT248AC84.000
CPN# undefined

PDF Datasheet Powered by CADENAS PARTsolutions

Technical Data	
Part No.	7.00CD3HKNFT248AC84.000
Cylinder	Cylinder
Bore	7.00
Cushion Head	C - Cushion Head
Double	Single Rod
Mounting	D - Head Trunnion (NFPA MT1)
Mounting Modification	No Mounting Modification
Combination Mounting	No Combination Mounting
Series	3H - 7" & 8" Bore Heavy Duty Hydraulic Tie Rod (Jewel Gland Style); and Large Bore
Piston Seal	K - KP Filled PTFE Piston Seal
Piston Magnet	N - No Magnet
Gland and Seal	F - Gland with Dual PTFE Rod Seals and PTFE Wiperseal
Port Type	T - SAE Straight Thread O-Ring
Seals	Water Based Fluids (Class 2)
Special	No Special Modification
Piston Rod Number	4 - 4.00 Inch INCH
Piston Rod End	8 - Style 8 Intermediate Male
Piston Rod End Alternate Thread	No Alternate Threads
Piston Rod End Thread	A - Imperial Integral Cut Threads (UNF, UNC, UN, BSF)
Piston Rod Number - End 2	N/A
Rod End Style (End 2)	N/A
Piston Rod End Alternate Thread - End 2	N/A
Piston Rod End Thread - End 2	N/A
Cushion Cap (or Second Head)	C - Cushion Cap
Stroke	84 INCH
Valve Manifold	N/A
Valve Pattern Group	N/A
Valve Location	N/A
Feedback Option	N/A
Feedback Furnished	N/A
Feedback Protective Enclosure	N/A
LRT Electrical Connector Location	N/A
WaveScale Electrical Box Location	N/A
Valve & Feedback Code	N/A
XI Dimension	N/A
BB Dimension - Head	N/A
BB Dimension - Cap (or Second Head)	N/A
Port Size - Head	#20 SAE
Port Location - Head	Position 1
Additional Port - Head	N/A
Port Size - Cap (or Second Head)	#20 SAE
Port Location - Cap (or Second Head)	Position 1

Technical Data	
Additional Port - Cap (or Second Head)	N/A
Proximity Switch - Head	N/A
Switch Location - Head	N/A
Switch Orientation - Head	N/A
Actuation Point - Head	N/A
Proximity Switch - Cap (or Second Head)	N/A
Switch Location - Cap (or Second Head)	N/A
Switch Orientation - Cap (or Second Head)	N/A
Actuation Point - Cap (or Second Head)	N/A
Switch Code	-
Needle Location - Head	Needle Valve Position 3 - Head
Needle Location - Cap (or Second Head)	Needle Valve Position 3 - Cap
Check Location - Head	N/A
Check Location - Cap (or Second Head)	Check Valve Position 3 - Cap
Gland Drain	N/A
Gland Drain Position	N/A
Piston Rod Wiper	N/A
Gland Wear Ring	No Wear Ring Gland
Piston Rod End Thread Type	Male Piston Rod Thread
Piston Rod End Thread (KK-CC)	Standard
Piston Rod End A Dimension	Standard
Piston Rod Wrench Flats	Standard
Piston Rod NA Turndown	Standard
Piston Rod End Extension Length	Standard
Piston Rod End Extension - Catalog Designation	Standard
Piston Rod End Type - End 2	N/A
Piston Rod End Thread (KK-CC) - End 2	N/A
Piston Rod End A Dimension - End 2	N/A
Piston Rod Wrench Flats - End 2	N/A
Piston Rod NA Turndown - End 2	N/A
Piston Rod End Extension Length - End 2	N/A
Piston Rod End Extension - Catalog Designation - End 2	Standard
Piston Rod Material	N/A
Piston Rod Plating	N/A
Piston-to-Rod Pinning	N/A
Stop Tube	N/A
Stop Tube Length	N/A
Net Stroke	84 INCH
Retract Stroke Adjustment	N/A
Retract Stroke Adjustment Length	N/A
Controlled Piston Bypass	N/A
Air Bleed Ports	No Air Bleed Ports
Air Bleed Port Location	N/A
Pivot Pin Options	N/A
Extra Tie Rod Nuts	N/A
Submersible Option	N/A
Corrosion Protection	N/A
Cylinder Body Material	N/A
Cylinder Body I.D. Chrome Plate Thickness	N/A
Paint	N/A
Submersible Code	N/A

PDF Datasheet Powered by CADENAS PARTsolutions

Hendrick Screen Company
Cutting Edge Metal Solutions

Our Environmentally Friendly Fish Diversion Screens are ready to go.

Hendrick is your single source supplier for all your screen needs. Our proprietary Profile Bar and Resistance-Welded designs lead to less debris and clogging for a smoother water flow. We have solutions for any situation you may encounter. Additionally we offer cleaning options to maximize flow efficiencies.

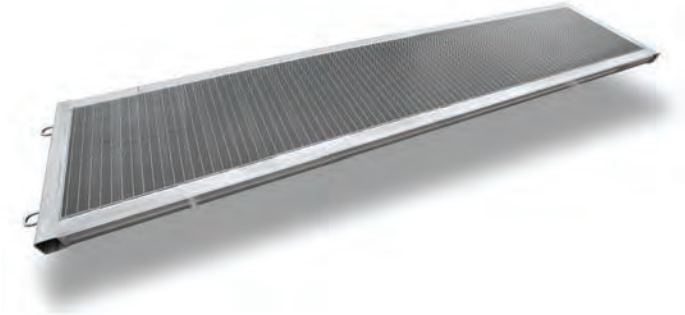

Hendrick Screen Company is a leading producer of fish diversion screens that are used to protect fish from hydroelectric turbines, pumps, and to prevent migration into irrigation canals. On our website you will find extensive information on our fish diversion screens, solutions to bio fouling problems, air burst systems, engineering data, and sample specifications.

Call us today to discuss your next project
Hendrick Screen Company
3074 Medley Road, P.O. Box 22075, Owensboro, KY 42301
P. 1-270-685-5138 • F. 1-270-685-1729
www.hendrickscreenco.com • www.waterintake.com
sales@hendrickscreenco.com

Screen Types

Profile Bar Construction is the preferred construction in the industry.
Hendrick Screen Company has engineered a proprietary construction method that makes HSC PROFILE BAR one of the strongest the industry has to offer.

Profile Bar Construction
images not to scale

PROFILE BAR	B-69	B-6	B-6S	B-9	B9S	B9M	B-12	T-7	T-12	T-16
BAR WIDTH	.069	.093	.093	.140	.140	.140	.187	.109	.187	.250
BAR HEIGHT	.290	.375	.290	.375	.320	.405	.500	.375	.500	.750
CAP HEIGHT	.093	.093	.093	.125	.125	.125	.156	.125	.156	.218

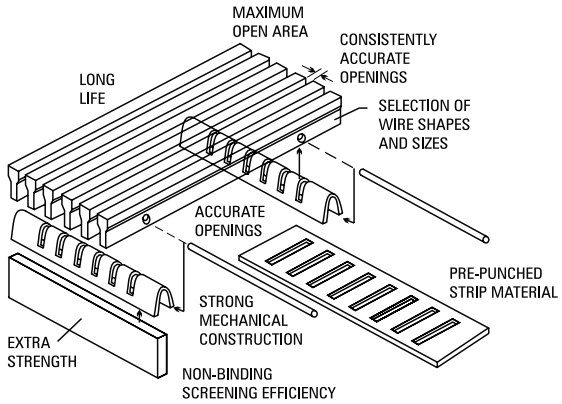

304, 316L Stainless Steel or Copper Nickel and Aluminum (B9 & B12)
Non-welded interlocked construction

Resistance Welded V-Wire Construction
images not to scale

V-WIRE	30V	47V	60V	69SV	69V	90SV	90V	125V
WIDTH	.032	.047	.060	.069	.069	.090	.090	.125
HEIGHT	.075	.098	.100	.125	.185	.105	.150	.200

Wire images not to scale

SUPPORT ROD	63H	L90Q	90Q	130Q	FIN
WIDTH	.063	.090	.090	.118	.070
HEIGHT	.095	.125	.160	.197	.500 .750 1.00

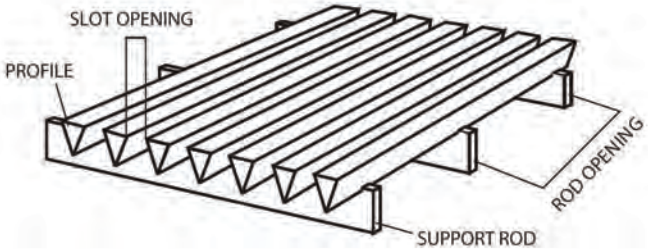

304, 316L Stainless Steel or Copper Nickel
Resistance welded construction

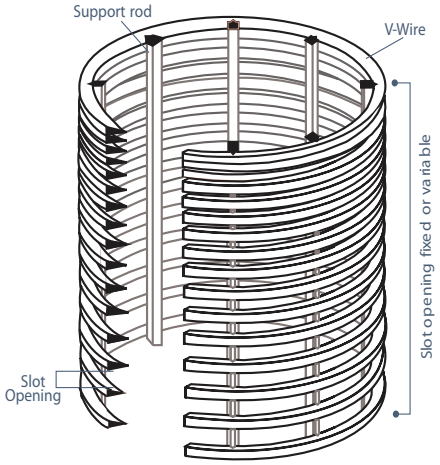

Resistance Welded Wire Screens are manufactured in cylinders and then flattened

Hendrick Screen Company
Cutting Edge Metal Solutions

3074 Medley Road, P.O. Box 22075, Owensboro, KY 42301
P. 1-270-685-5138 • F. 1-270-685-1729
www.hendrickscreenco.com • www.waterintake.com
sales@hendrickscreenco.com

BULLETIN 10.00-11
APRIL 2021

DeZURIK

HILTON FABRICATED & CUSTOM VALVES

The Hilton Story

60 Years of Knife Gate Valve Innovation

The Hilton Valve story began in 1944 while Harold Hilton was serving as Engineering Officer on a U.S. Navy destroyer. When a shipboard valve was damaged at sea, Mr. Hilton designed and fabricated a replacement using materials in the ship's maintenance shop.

In the late 1940s, while working as an engineer for a steel fabricating company, Mr. Hilton again designed a fabricated valve when a critical production schedule couldn't wait for the delivery of a cast valve.

In 1952, and with years of fabrication and piping system experience, Mr. Hilton founded Hilton Valve.

Early production included a variety of valve styles with emphasis on fabricated Knife Gates which were used extensively in pulp and paper mills. For the past 60 years, Hilton Knife Gate Valves have found a growing range of applications in other industries based on their ruggedness and economy.

In 1983, Hilton operations were redirected to focus exclusively on the design and manufacture of fabricated valves including Large Diameter and Custom Knife Gate Valves and on other valve designs built to specific application requirements.

With a reputation for design innovation and installed product performance, Hilton Valves provide reliable shutoff and control of high volume and critical flow in all industries including Water, Hydro, Energy, Process, Mining, Material Handling and Marine systems worldwide.

24" Bonneted Knife Gate, 800 psi, Inconel 625 Trim, Coal Processing, Wyoming

Harold Hilton, Founder (right) with Bud Stinson Shop Foreman (right center) and Early Bonneted Knife Gate Valve

© 2021 DeZURIK, Inc.

Fabricated Large and Custom Valves

Specialization

Dedicated Hilton engineering and manufacturing focuses exclusively on fabricated valves. Models include Knife Gate Valves to 144" (3700mm), Custom Knife Gates to ASME Class 900 and temperatures to 2000° F (1090° C), Hydro Valves and a variety of other Fabricated Valve styles.

Fabricated Construction Provides Design Flexibility and Quality

Fabricated construction allows unlimited design flexibility for compliance to U.S. and International Standards. Valves can be built of any weldable alloy with selection based on specifications, media and operating conditions. The use of certified plate material assures design integrity and final valve quality. Plate material is also well suited to the application of special purpose coatings and hard facings which are applied in the Hilton plant.

Fabricated Construction Reduces Manufacturing Time

Plate material is readily available in all alloys to avoid foundry and casting delays to improve responsiveness and reduce delivery time. On severe service applications where valve wear surfaces require periodic refurbishing, fabricated plate construction is more easily repaired than cast valves resulting in quicker turnaround and reduced maintenance cost.

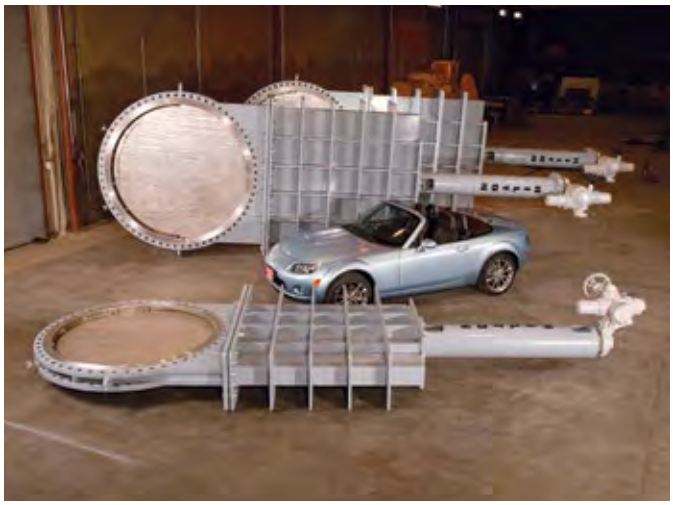

84" & 66" Bonneted Knife Gates, CS Flanges, 304 SS Trim, Electric Motor Actuators, Wastewater Plant, Dallas

30", 36" & 42" Solid SS Bonneted Knife Gates, 50 psi, Wastewater Treatment Plant Gwinnett County, GA

Hilton Leadership Design and Application Engineering Experience

Hilton products reflect 60 years of Fabricated Valve design and are recognized for installed performance with proprietary designs, industry leading technology and unmatched experience. Hilton custom engineering capability builds valve performance with two unique design concepts.

– **Design For Application** matches valve design, rating and material to specific application requirements for assured performance at the lowest cost.

– **Partnership Design Programs** bring together Hilton and customer situation analysis for joint development of application-based and problem solving design specifications to address unique valve requirements. The process begins with a definition of application needs and valve performance criteria and carries through design, build and testing to a coordinated valve specification.

Knife Gate Valves

Hilton valves as shown represent a cross-section of general product design and operating characteristics. Fabricated construction extends this range to meet specific application requirements. Other product options and recommendations are available on request.

Large Diameter Knife Gate Valves

– Standardized General Service Valves 36" to 144" (900 to 3700mm)

– Round, Square & Rectangular Models

– Built to U.S. or International Standard

– Pressures 25 to 300 psi (170 to 2070 kPa), Temperatures -40° to 2000° F (-40 to 1090° C)

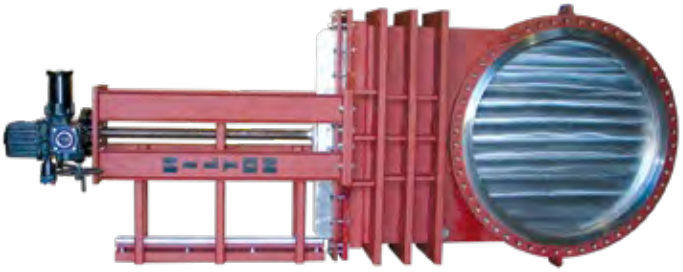

60" Bonnetless Knife Gate, Resilient Seat, Extended F to F, Gate Guide, GE Plastics Southern Indiana

Bonneted Knife Gate Valves

– Knife Gates with Steel, Stainless or Alloy Bonnets

– Pressurized, Unpressurized, Optional Flushing Ports

– Specifications same as basic Knife Gate Valve

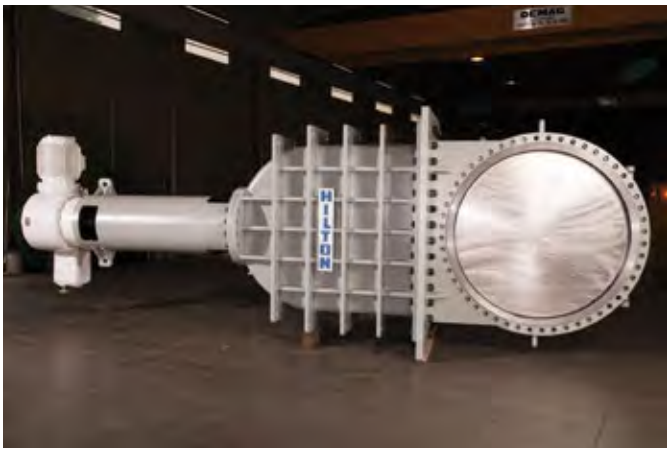

60" Bonneted Knife Gate, 275 psi, Carbon Steel, 304 SS Trim, Epoxy Interior, Chicago Deep Tunnel System

Throttling Knife Gate Valves

– Heavy Duty Bonneted Knife Gate Valves

– For Throttling at Full Rated Pressure

– Sizes 6" to 144" (150 to 3700mm), Pressures to 400 psi (2760 kPa)

– Square Bottom Gate, Round or V-Port

90" Inlet x 102" Outlet Throttling Knife Gate, 30 psi, PG &E Pitt River Dam, Northern California

High Pressure, High Temp Knife Gate Valves

– Severe Service Designs and Materials, Sizes to 72" (1800mm)

– Pressures to ASME 900, Temperatures to 2000° F (1090° C)

8" Bonneted Knife Gate, ASME 600, 304 SS, Extended RTJ Flanges, Hydraulic Cylinder, Peak Power Plant System

Thru-Port Knife Gate Valves

– Ported Gate with Round or Diamond Opening

– For Slurries, Solids & Granular Applications

– Sizes 4" to 48" (100 to 1200mm), Pressures to 400 psi (2760 kPa)

24" Thru-Port Knife Gate, 150 psi, Replaceable Bi-directional Metal Seats, Teflon Internal Cavity Filler, Tianjin Chemical China & GE Plastics Mississippi

Material Handling Valves

– Body Displacement Pocket Allows the Valve to Close Through a Stationary Column of Granular Material

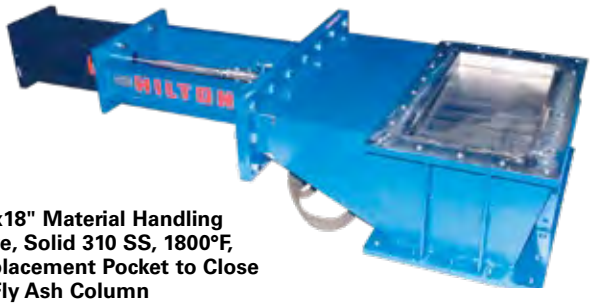

12"x18" Material Handling Valve, Solid 310 SS, 1800°F, Displacement Pocket to Close on Fly Ash Column

Abrasion, Corrosion Resistant Knife Gate Valves

– Special Abrasion & Corrosion Resistant Designs

– Hard Facing: Stellite, Tungsten Carbide, Pulse Fusion

– Sizes 2" to 48" (50 to 1200mm), Temperatures to 2000° F (1090° C)

40" Thru-Port Knife Gates, ASME 300, Removable Port Liners, Tungsten Carbide Hardfacing & Abrasion Resistant 410 SS Gate, Abrasive Mine Tailings, Kennecott Copper, Utah

Custom Knife Gate Valve Designs

– Custom Styles, Configurations, Materials

– Discrete Models Designed to Application Needs

– Vacuum to ASME Class 900, -40° to 2000° F (-40 to 1090° C)

18" Bonnetless Knife Gates, 150 psi, 316 SS Trim, Expanded Metal Safety Guard, Hazardous Waste Disposal, Ohio

Hydro Guard, Jet Flow & Control Valves

Throttling Knife Gate Valves

For lower head applications, this specially modified Knife Gate Valve is an economical alternative to a Jet Flow Gate. Normally bonneted, can also be supplied bonnetless. Like the Jet Flow Gate, anti-cavitation design includes a downstream port larger than the inlet port to provide sufficient air flow. The bottom of the gate is square to allow full gate support throughout the entire travel length. Conversely, round bottom gates are susceptible to vibration and damage when used in free-discharge service. Throttling Knife Gate Valves provide higher flow capacity than Jet Flow Gates of the same size. Typical construction includes stainless steel wetted parts. Sizes 6" to 144" (150 to 3700mm), pressures to 200 psi (1380 kPa).

Guard Valves

Guard Valves are specially designed Knife Gate Valves used to provide shutoff and to isolate Hydro flow control valves for maintenance (Jet Flow Gates, Throttling Knife Gate Valves, Howell-Bunger fixed Cone Valves). Capable of closing under full free-discharge flow if the control valve can't be closed. Normally bonneted, can also be supplied bonnetless. Typical construction includes stainless steel wetted parts. Sizes 6" to 144" (150 to 3700mm), pressures to 400 psi (2760 kPa).

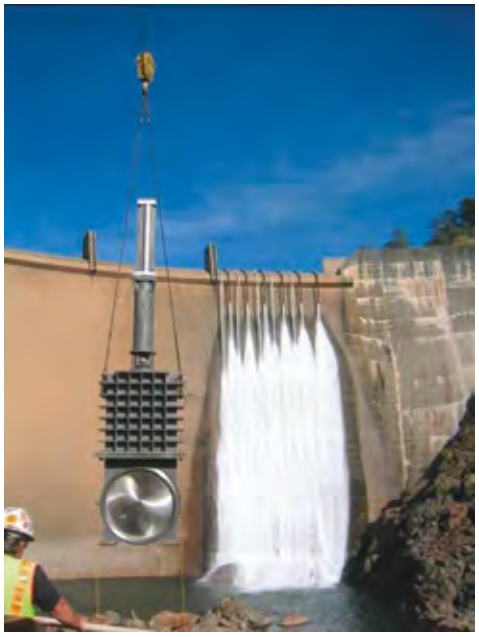

78" Hydro Guard Valve, 130 psi, CS with 304 SS Trim, For Fixed Cone Valve Isolation, Englebright Dam, California

Jet Flow Gate, 24" Inlet, 38" Outlet, 150 psi, CS with 304 SS Trim, Big Tujunga Dam, Los Angeles County

Jet Flow Gates

Specially designed for high velocity flow regulation on high-head dams and reservoirs. Jet Flow Gates provide precise, full range throttling from full open down to full closed. Split body design available with stainless steel trim and epoxy internal coating or with all stainless wetted parts, both with bronze gate guides and bronze seat ring. All components are fully machined for precise alignment. Anti-cavitation features include a tapered seat ring to direct flow inward and a downstream port larger than the orifice port to provide sufficient air flow. Based on original U.S. Bureau of Reclamation design. Sizes 6" to 96" (150 to 2500mm), pressures to 400 psi (2760 kPa).

42" Jet Flow Gate, Head 800 Feet, La Grand Dam, Tacoma, WA

Other Valve Models, Design Options, Actuators

Fabricated Wedge Gate Valves

– Tight Shutoff, Solid Wedge Gate

– Large, Specialty & Custom Designs

– Sizes to 72" (1800mm), Pressures to 600 psi (4140 kPa)

48" Wedge Gate Carbon Steel Body, Monel Trim, Belzona Interior Coating, Narrow F to F, Shipboard Seawater Cooling

Fabricated Check Valves

– Large Diameter Cushioned Checks with Closure Assist

– Meets Municipal Water System Requirements

– Sizes to 84" (2200mm), Pressures to 150 psi (1030 kPa)

54" Swing Check Valve, Outside Lever & Weight, Bottom Hydraulic Dampener. Wastewater Treatment Plant, Taiwan

Valve Operating & Control Systems

– Manual, Powered & Custom Actuators, Control Panels

– Pneumatic, Hydraulic, Electric, Electronics

Design Options & Modifications

– Typical Options: Round, Square or Rectangular Models

– Extended Body/Flanges, Different Inlet & Outlet Sizes

– Two Valves in One Body, Y or T-Style Diverter Valves

– Non Rising Stem Actuators, Side Mounted Actuators

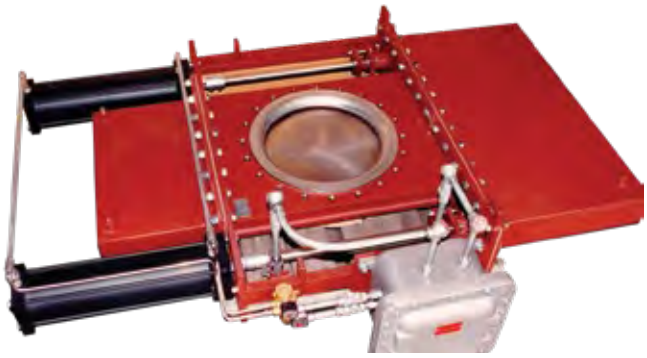

20" Thru-Port Valve, Double Bonneted, Dual-Side Mounted Cylinders to Reduce Length, Dry Solids Gravity Flow

Bonnetless Knife Gate, 150 psi, 304L SS, Extended F-to-F, Purge Ports, Pneumatic, Co-Gen Plant Wood Chip Processing

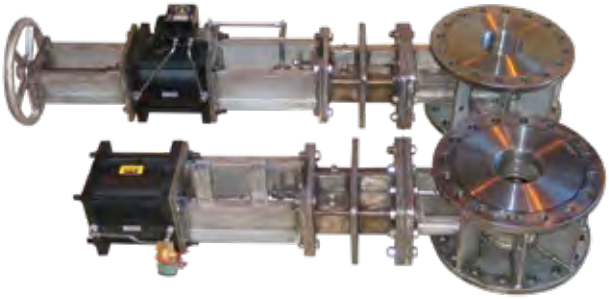

12" Bonneted Knife Gates, 6" Port, 300 ASME, 1500°F, 316 SS, Stellite Hardfacing, Hot Wall Valves on Refractory Lined Pipe

DeZURIK + Hilton Capability

Hilton Operations

Hilton full range manufacturing capability includes in-house Fabrication, Welding, Hard Facing, Machining, Assembly, Testing and Quality Control. Welding is by Certified Welders. Material and Test Certificates are available on all Hilton Valves.

Hilton Engineering brings together the full range and scope of Hilton Knife Gate and Fabrication experience with state-of-the art design capability including Solid Works and Auto Cad Design and Finite Element Analysis to assure valve design and performance that meets exacting specifications and performance criteria. Products are designed and manufactured to U.S. or International Design, Dimensional and Piping Standards and to specific customer specifications as required.

In-House Certified Welding of All Alloys & Hardfacing

In-House Machining, 72" Bonneted Knife Gate Valve

Hilton Service and Repairs

Hilton customer commitment begins with quality manufacture and continues with after-sale support that assures installed valve performance, extended valve life and long term valve economy. Services include start-up and commissioning of new valve systems, field service and maintenance support for installed valves and factory refurbishing and repair of valve wear components. Factory repair provides an engineering analysis of components and materials to define repair tactics needed to return valves to new condition and to maximize valve life at the lowest possible cost. Responsiveness and quick turnaround add the final element of Hilton Valve performance with a 60 year commitment to customer satisfaction.

Combined Experience & Resources

The linking of Hilton and DeZURIK resources creates a broad line of Standard, Fabricated and Custom Knife Gate Valves that reflects a combined 100+ years of Knife Gate leadership in valve design, manufacturing and installed product performance.

The combining of industry experience and product technical support extends application capability in meeting engineered valve requirements in all industries and brings with it a mutual dedication to quality and service.

Four manufacturing locations produce DeZURIK, Hilton and APCO products with a focus on market responsiveness and on providing the highest level of product quality and performance.

A worldwide sales and service organization provides firsthand knowledge of valve design and application to support the development of engineering-based solutions with the full line of DeZURIK, Hilton and APCO products.

Sales and Service

For information about our worldwide locations, approvals, certifications and local representative:
Web Site: www.dezurik.com E-Mail: info@dezurik.com

DeZURIK

250 Riverside Ave. N. Sartell, Minnesota 56377 • Phone: 320-259-2000 • Fax: 320-259-2227

DeZURIK, Inc. reserves the right to incorporate our latest design and material changes without notice or obligation. Design features, materials of construction and dimensional data, as described in this bulletin, are provided for your information only and should not be relied upon unless confirmed in writing by DeZURIK, Inc. Certified drawings are available upon request.

Printed in the U.S.A.

FLOWSERVE

Limitorque MX

The Next Generation in Smart Multi-turn Actuation

Experience In Motion

Flowserve Limitorque Actuation Systems

Limitorque is an operating unit of Flowserve, a $2+ billion-a-year company strongly focused on automation and support of the valve industry. Flowserve is the world's premier provider of flow management services.

Limitorque has evolved over 75 years since its strategic introduction of a "torque-limiting" design that changed an industry. Flowserve Limitorque offers solutions and automation choices for customers which provide:

- cost savings from field devices such as electric valve actuators.
- greater operating efficiencies from control room performance sequencing, interlocking, and continuous process optimization.
- competitive advantages derived from increased management visibility of databases and networks.

Limitorque is one of the primary reasons Flowserve is "Experience In Motion."

The MX speaks your language, whether it's management, technical, financial, operations, or service.

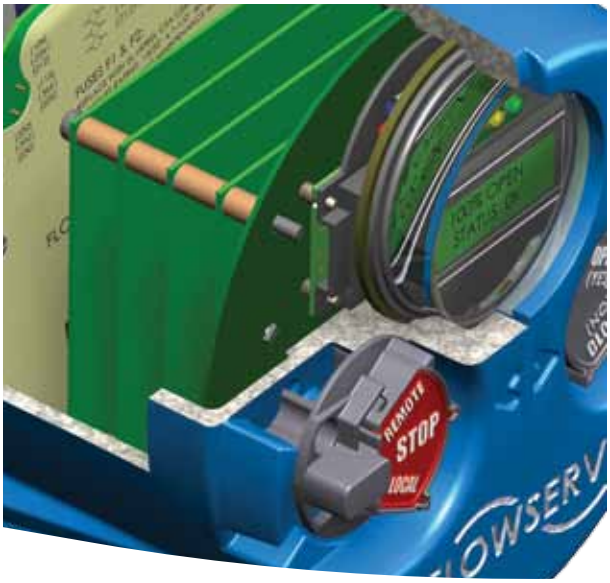

MX – Still "No Batteries Required"

Limitorque MX: smart multi-turn actuator that delivers what you want most — control, ease of use and "no batteries required."

Flowserve Limitorque introduced the MX electronic actuator in 1997 as the first smart actuator that provided uncompromised reliability and performance in a design that was easy to use. The MX innovations which were market firsts – unique absolute encoder that doesn't require battery back-up – Limigard™ technology – easy to use menus in six languages – the use of Hall effect devices to eliminate potentially troublesome reed switches – have been improved. The features Users have come to expect from Flowserve Limitorque are still standard, but the list of improvements and optional equipment permits improved reliability, functional performance and durability. The MX is the smart actuator design that is rigorous and easy to use. It is the only non-intrusive, double-sealed electronic actuator to display the Limitorque brand.

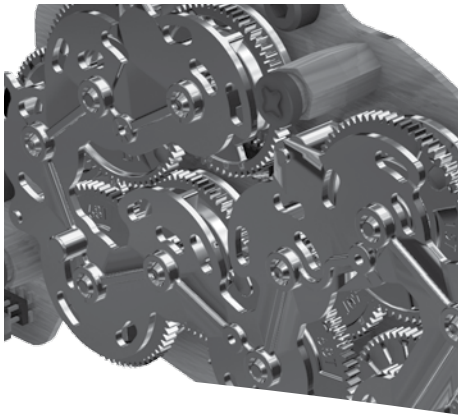

MX: The Next Generation in Smart Actuation

Speed, Precision and Simplicity

The MX control panel features an improved 32-character LCD screen that provides actuator status and diagnostics in an easy to use, easy to read, graphical format. The industry's first multilingual actuator is now capable of configuration in English, Spanish, German, French, Italian, Portuguese, Mandarin, Russian, Bahasa Indonesia and Katakana as standard configuration languages. In addition, the LCD can be rotated 180˚ for better field visibility.

Speed, precision, simplicity, and set-up speed are characteristics expected of a smart actuator. Users and valve OEMs demand quick set-up and easy to understand dialog in preferred languages. The ability to either upload new software or download diagnostics is also critical to improving a plant's efficiency. The MX provides customers with the essential tools for rapid installation and root cause diagnostics.

Precision is expected in a smart actuator. The MX was the first such device developed with an innovative absolute encoder that doesn't require troublesome and unpredictable battery back-up. Flowserve Limitorque's innovative absolute encoder has been improved to 18-bit resolution over 10,000 drive sleeve rotations and is 100% repeatable. It now has BIST (Built In Self Test) enhancements and redundancy.

When a device is designed for BIST, its methodology is such that much of the test functionality is embedded in the device itself. BIST design facilitates a critical component's ability to communicate its actual state to a CPU for comparison to the expected state. Any deviation from expected values will be reported to the User with correlation to the failed component or sub-system.

Simplicity is expected in a smart actuator. In fact, one of the reasons for using an electronic actuator is the simplicity of set-up, installation on a valve, and acquiring diagnostic information. The MX is the simplest and easiest to use electronic actuator.

Long Life and Protection

Long life is expected in a smart actuator. There are more than 1,000,000 Limitorque actuators installed around the globe, in every conceivable environment. Many have been functioning for over 50 years. Introduced in 1997, the MX is the Flowserve Limitorque smart actuator that inherits Limitorque's legendary longevity.

In order to last a long time in severe environments smart actuators must have unparalleled protection. The MX's IP68 enclosure rating is 15M for 96 hours, regardless of whether the unit is weatherproof or explosionproof. This is an industry leading feature. Add other certifications to the list – NEMA 4, 4X, 6 – and the MX is unsurpassed in unit protection.

The MX is double-sealed, which isolates the terminal compartment from the controls environment. Any leakage into the terminal compartment is contained in the compartment.

The MX is powder coated using a polyester resin in Dupont Blue Streak color, not only for aesthetics, but also for protection in severe corrosive environments.

Quality and Certifications

Flowserve Limitorque is a global leader in quality manufacturing. All Limitorque plants are certified to ISO 9001 standards, the recognized benchmark for quality all over the world. The same unexcelled use of certified materials is found in the MX as in Limitorque's naval and nuclear qualified electric actuators. The MX has used synthetic gear oils especially optimized for use with worm gear sets since the

first unit was shipped in 1997. It was the first non-intrusive actuator to use rolled worms and electronic controls designed and produced using surface mount technology. A true globally certified device, MX meets all pertinent European Directives including ATEX, EMC, Machinery and Noise and displays the CE mark associated with such compliance.

Anatomy of MX Multi-turn Actuators

Limitorque MX actuators respond to customer needs with advanced features designed for ease of commissioning and use, as well as time- and money-saving operational benefits. What sets the MX apart is the combination of control and reliability enabled by advanced Limitorque technology, plus superior ergonomics and human interfaces for speed, comfort, and ease of use.

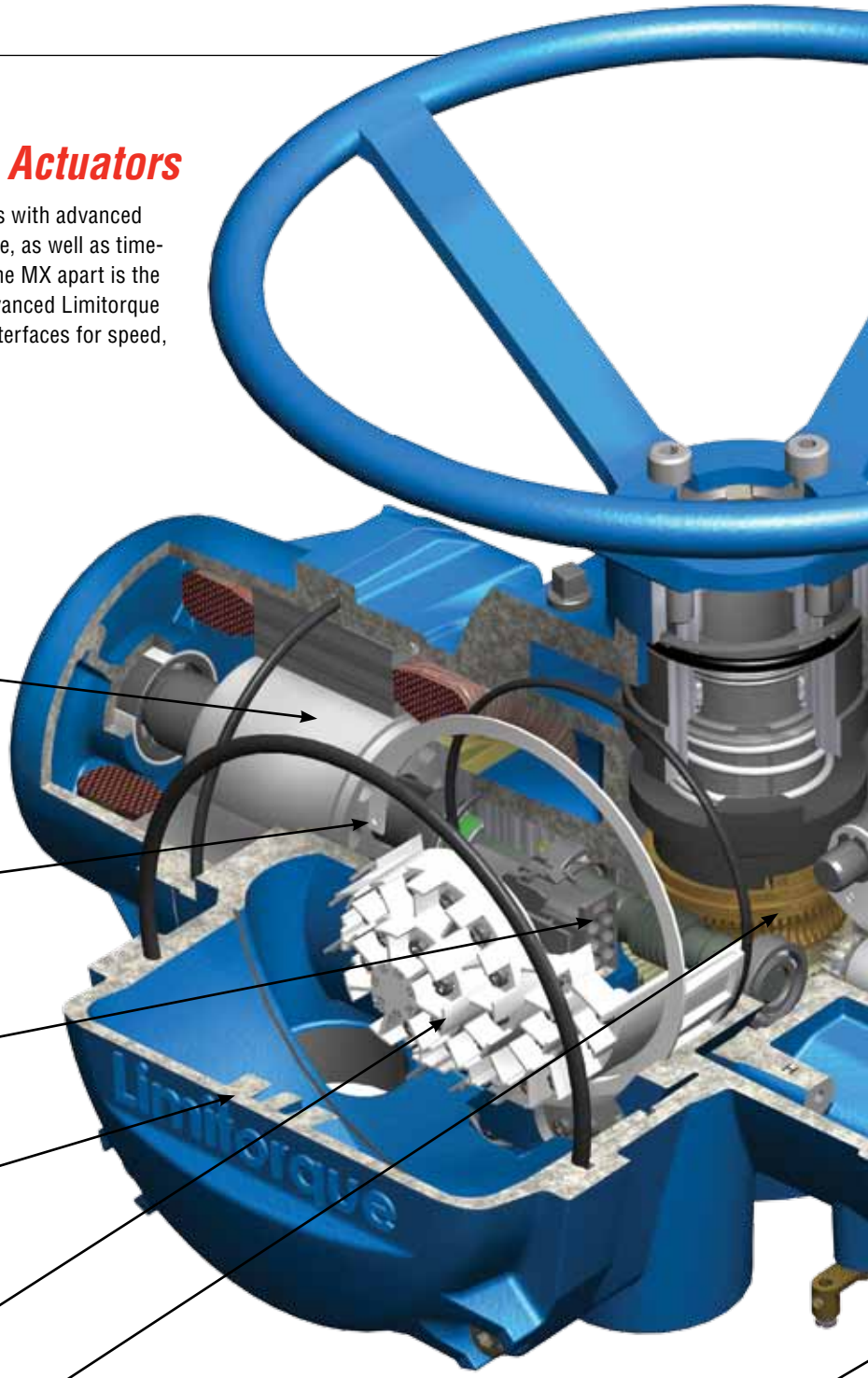

The reliable MX motor includes Class F insulation and thermal protection. It is designed specifically for valve actuator service, with a high starting torque and low inertia to reduce valve position overshoot. Class H is available as an option.

Motor gear attachment allows the motor to be removed in one assembly for fast, easy inspection, repair, and maintenance.

MX actuators feature a LimiGard™ circuit monitor that is designed for Fail/No-Action protection. LimiGard consists of dedicated circuitry that continually monitors the motor contactor, control relays, internal logic circuits, and external command signals to detect and alarm malfunctions. It now includes BIST with Frequency Domain Analysis (FDA) for true predictive maintenance.

Plug-in connectors permit quick and easy replacement of components.

Double-sealed design provides a termination chamber that is separate and sealed from the control chamber. Control components are never exposed to the elements during site wiring or because of a faulty cable connection.

External connection block has three power terminals, a ground screw, and 54 control screw-type terminals to simplify commissioning and upgrades.

Long-life gear set consists of hardened alloy steel rolled worm and bronze worm gear immersed in an extended-life synthetic gear oil specifically developed for worm gear operation. It is completely bearing-supported.

Ductile iron thrust base is removable from main actuator housing for easier valve installation and maintenance.

High-strength, bronze alloy stem nut is removable for machining to suit the valve stem.

The control chamber includes an electronic control, monitoring, and protection module mounted on steel plate. Plug-in connectors allow fast, error-free removal and replacement of the module.

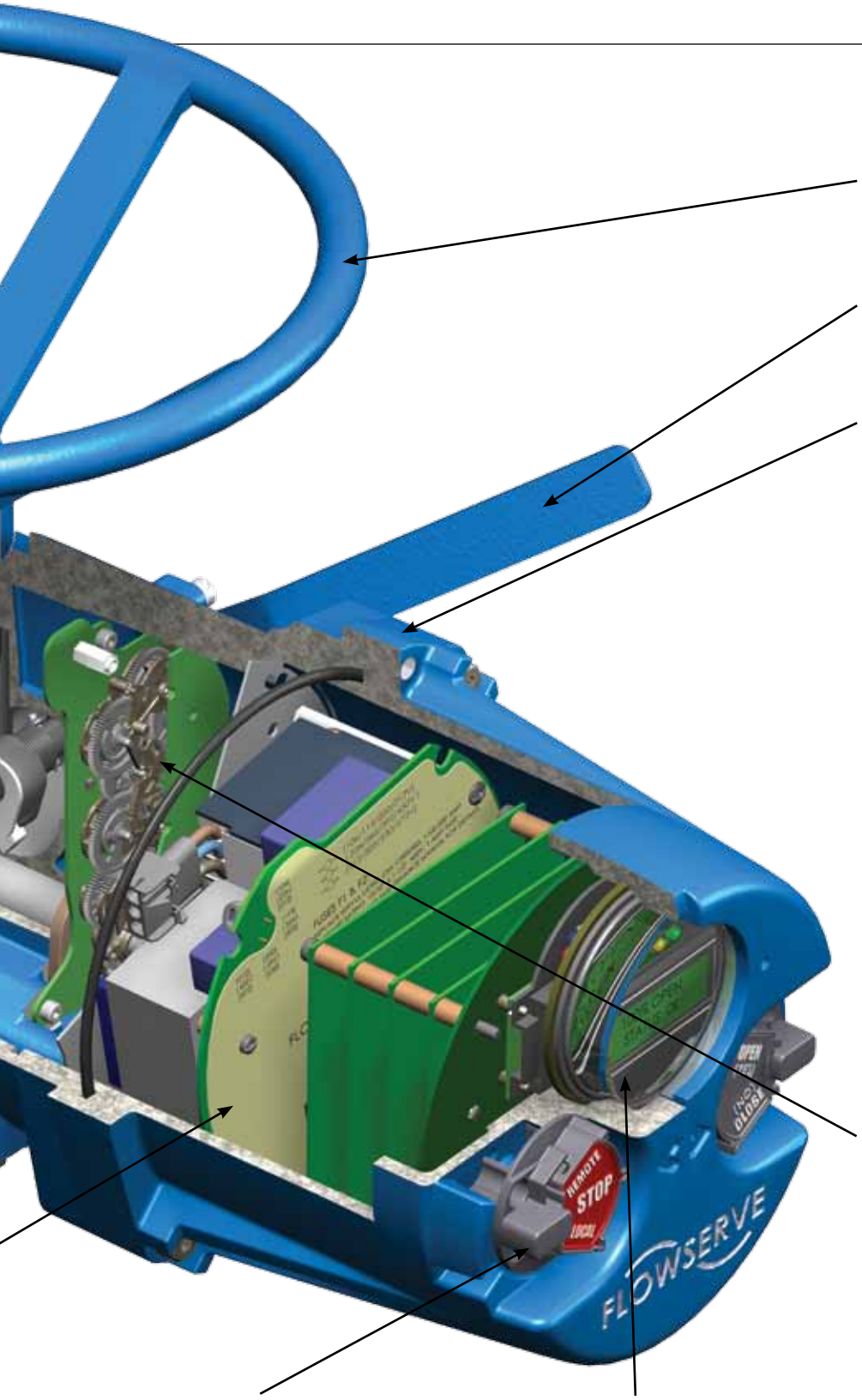

The MX heavy-duty handwheel provides backup for manual operation.

Declutch lever enables the MX actuator to be placed in manual, handwheel-drive operation. Lever automatically disengages when motor is energized and can be padlocked in the motor position.

Cast aluminum housing powder-coated for extreme environments. Optional coatings are available.

Optionally, controls may be powered from an external 24 VDC source as backup for AC power. Controls and display will remain active through loss of AC power.

Torque sensor derives output from motor speed, temperature, and voltage—and shuts off the motor to protect the actuator and valve if the set torque is exceeded. This method of torque scanning indicates Limitorque's commitment to be fully electronic.

Flowserve Limitorque's uncompromising commitment to "no batteries required" is enhanced with the addition of the optional MX Quik (MX-Q) uninterrupted power transfer when mains power is lost to the actuator. MX-Q powers the S/R contacts for updated status to the control room and also provides limited visibility of the LCD screen. It is configurable for "MX Quik time" and, once main power is restored, is available for the next unforeseen power outage.

The absolute encoder, a key that enables MX actuators to achieve 100% repeatable control, provides optical sensing of valve position with 18-bit resolution. The encoder measures valve position in both motor and handwheel operation. No battery or back-up power supply is required. It is now redundant, permitting up to a 50% fault tolerance, ensuring reliable performance in the unlikely event of component failure.

Local control switches make setup and calibration easy, using "yes" or "no" responses to straightforward questions, plus they provide the ability to open, stop, and close the actuator and to select remote or local preferences. These switches are magnetically coupled, solid state Hall effect devices, which eliminate troublesome and fragile reed switches.

The control panel display delivers instant, up-to-the-minute actuator status and valve position in ten languages. It also provides simple calibration and diagnostic information, including motor, identification, hardware data, as well as torque profile log reports.

The MX now offers Bluetooth technology as optional, up to 10 meters. When used with Flowserve Limitorque's Windows CE and Mobile 5 based graphical interface Dashboard™, diagnostic information, which includes FDA (frequency domain analysis) can be transferred easily to a PDA, laptop computer or smart cell phone.

Control & Diagnostics

Control is expected in a smart actuator. The MX is noted for simplifying valve control automation in three critical methods of control:

- Calibration/set-up
- Normal operation
- Diagnostics & troubleshooting

The MX was the first non-intrusive actuator to equip Users with LCD dialog screens in the language of their choice. MX now uses a graphical dot matrix display that improves the visibility of the display. The use of this type of LCD permits the support of any language. In fact, in addition to English, Spanish, German, French, Italian, and Portuguese, the MX now includes four new languages – Mandarin, Russian, Bahasa Indonesia and Katakana – with a capacity for even more. The orientation of the text can be configured to rotate 180° and diagnostic graphs displayed for clearer data collection.

Simple "Yes" and "No" responses to dialog questions confirm the set-up of the MX via solid state Hall effect devices in both knobs. No special tools or remote devices are required. And the MX is "fit for service", offering the widest range of configuration menus of any non-intrusive, smart actuator.

Diagnostics should be easy to read and decipher. The MX diagnostic enhancements now offer a BIST (Built In Self Test). The BIST feature is also designed into a state-of-the-art controls platform that verifies and validates the integrity of its components. The result is a design which aids the User in meeting the SIL (Safety Integrity Level) requirements of IEC 61508. While an electronic actuator does not have a SIL rating by itself, placing a smart device into any plant system should enhance the ability of a given safety system to achieve its preferred SIL rating. Any device which incorporates fully developed BIST features provides assurance to the User that the device has been designed with plant-wide safety and integrity of operation in mind.

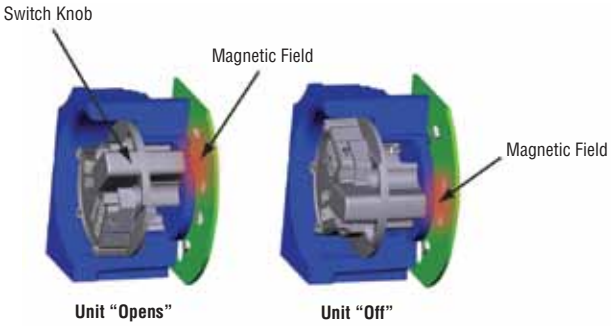

Unit "Opens"

NOTE: Illustration for information only.

Unit "Off"

Hall effect devices interlocked to prevent operation

The "View Diagnostics" menu selections now include more definitive routines which can isolate troubleshooting to "root cause" error codes. These root cause codes can be used in conjunction with BIST. A well designed BIST based system can do more than just report failures in the electronic sub-systems. It can also determine failures or

predict future failures in its associated mechanical system. To further enhance MX diagnostics a new component has been added to the Limigard feature – Frequency Domain Analysis.

The Frequency Domain Analysis (FDA) methodology for MX is based upon capturing torque, position or speed values at regular time intervals while the actuator is motoring, then calculating the resulting data set with a Fast Fourier Transform (FFT). This converts the actuator's torque, position or speed signature from time to frequency. The resulting information is very useful at pinpointing any components in the mechanical drive train that have failed, or are about to fail. Only the MX has the FDA feature available in the Dashboard Software.

The MX now offers Bluetooth technology as optional, up to 10 meters. When used with Flowserve Limitorque's Windows CE based graphical software interface Dashboard™, diagnostic information can be transferred easily to a PDA with Windows Mobile 5 platform, laptop computer or smart cell phone. In addition, new firmware can be uploaded (IrDA only) and actuator configurations transferred from one device to any number of subsequent actuators.

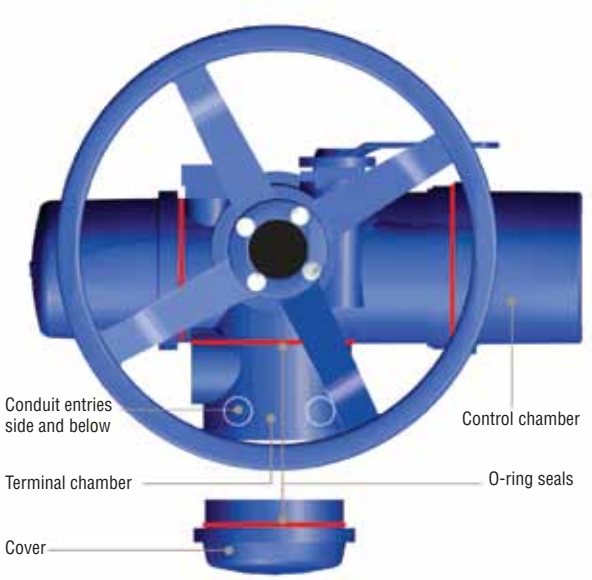

Double-sealed protection from dust and moisture

Nothing exceeds Limitorque MX actuators for ease and compatibility with valves of all types

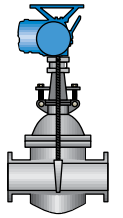

MX mounted to wedge gate

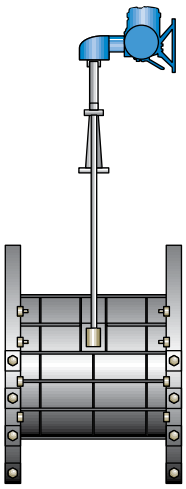

MX/B320 mounted to sluice gate

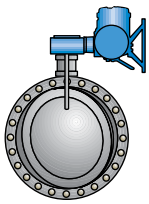

MX/HBC mounted to butterfly valve

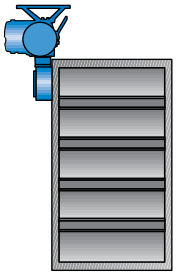

MX/PT mounted to damper

Valves

Limitorque MX actuators have been designed to accommodate today's wide variety of valve designs and to meet international standards for valve and actuator interfaces, including ISO 5210 and MSS SP-102.

MX actuators are available in a wide variety of configurations to accommodate various applications and valve designs:

Direct mounting The MX can be directly coupled with valves for torque-only applications. For thrust applications, a separate thrust base is used.

MX/HBC/PT The MX can be coupled to a PT or HBC worm gear reducer for operation of part-turn valves, such as butterflies, balls, plugs, and dampers. This combination provides an output torque capacity of up to 136,000 ft-lb/184,280 N m.

MX/B320/MT Rising stem valves may be operated by an MX coupled to a B320 bevel gear reducer. Thrusts up to 325,000 lb/1,445 kN and torque up to 12,000 ft-lb/16,320 N m can be accommodated.

Couplings

Thrust actuator drive couplings:

- Type A1 – Alloy bronze (thrust)
- Type A1E – Extended bronze nut

Torque-only actuator drive couplings:

- Type B4 – Standard steel bushing
- Type B4E – Extended steel bushing
- Type B1 – Large fixed-bore keyway steel bushing (ISO 5210)
- Type BL – Splined steel bushing for rising rotating stem valves

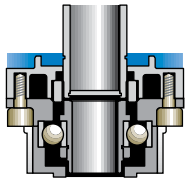

Type A1

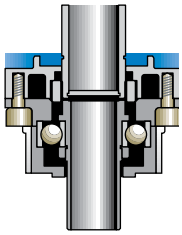

Type A1E

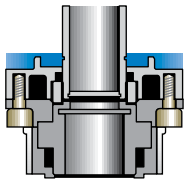

Type B1

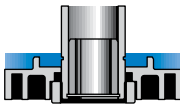

Type B4

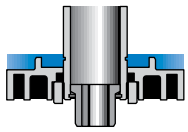

Type B4E

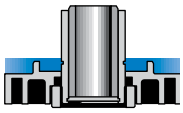

Type BL

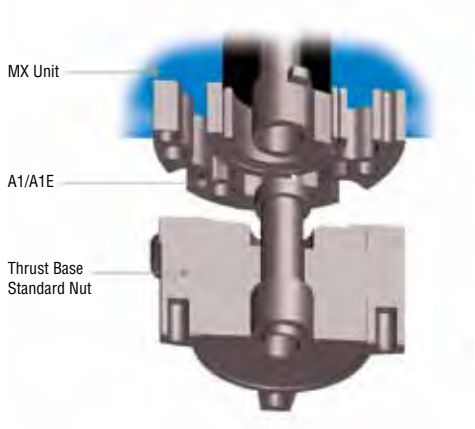

Integrity and Predictable Performance

Smart actuators should have enabling technologies that ensure integrity and dependability. The MX offers three.

Limigard — now with BIST and FDA

Enhanced reliability for optimal plant operations and reduced troubleshooting costs are the primary benefits of Limitorque's unique smart actuator monitor: LimiGard.

When LimiGard wiring diagrams are followed, LimiGard continually monitors the control relays, internal logic circuits, and external command signals, comparing them to reference conditions. This virtually eliminates the possibility that an actuator malfunction can occur without prompt detection and alarm communication. In the event of a malfunction, LimiGard takes over and supervises the actuator's response characteristics, maximizing safety and predictability. Fault Insertion Tests confirm this Fail/No-Action philosophy built into every MX actuator.

A state-of-the-art electronic actuator such as the MX should include means for verifying and validating that its components are designed with Built-In-Self-Test (BIST) capabilities. Selecting the MX, which incorporates a high level of BIST, can contribute greatly to the integrity and reliability of process applications and enhance the ability of a safety system to achieve its highest possible SIL rating.

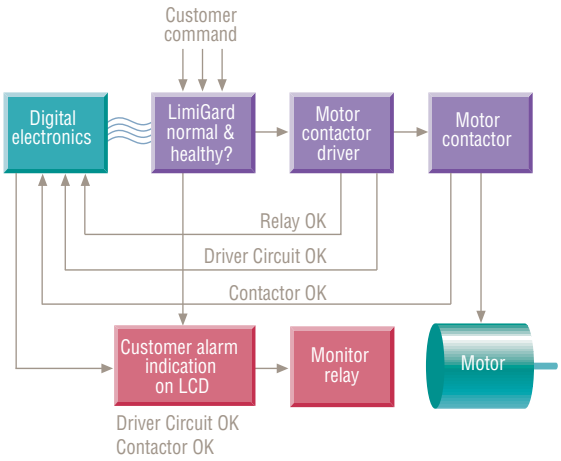

Absolute position encoder

Limitorque was the first electronic actuator supplier to use an absolute encoder which doesn't require battery back-up for positioning. Customers specify absolute encoders for uninterrupted performance and the MX meets customer expectations with an improved, 18-bit optical, 100% repeatable device. Position information is accurate with or without electrical power. The 18 bits also means that the span of the MX encoder is now almost 10x the original – good for ~10,000 drive sleeve rotations. The encoder has redundant circuits ensuring performance even in the event of up to 50% component failure, continuing to provide reliable data while alerting the user to any faults.

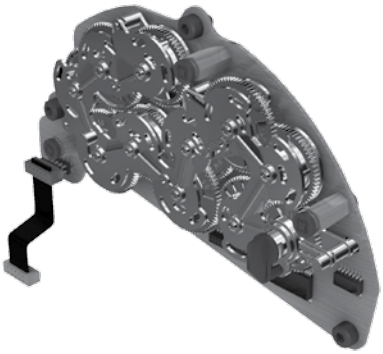

Torque sensing

Torque limiting has been a Limitorque feature for better than 75 years. In fact, the name Limitorque was coined to identify the ability of an electric actuator to "limit torque" to a valve. In the past, electromechanical actuators have sensed torque using a complicated system of springs, switches and cams. The MX actuator senses torque electronically for use in valve control, overload protection, and torque trending. In conjunction with the Limigard feature, torque is sensed from motor speed, with compensation performed for voltage and temperature variations. The result is highly reliable and predictable torque sensing without the need for the extra components associated with electromechanical torque switches. The MX is a true smart actuator.

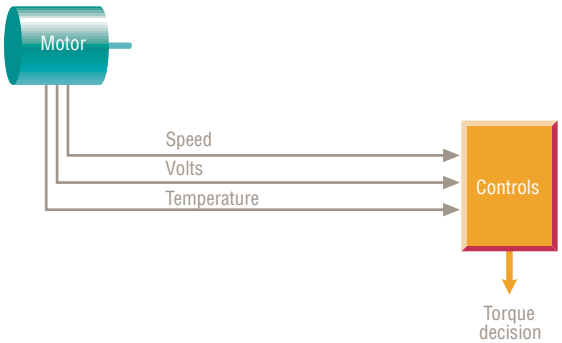

MX Control, Indication, Protection and Optional Features

Standard features

- Direct-wired remote control – Wiring flexibility includes the following standard alternatives to open-stop-close the actuator:
  - Four-wire – Valve can be opened, closed, or stopped.
  - Two-wire switched – Single open or closed contact; valve can be opened or closed, but not stopped.
  - Three-wire maintained – Two maintained contacts for self-maintained control. Valve can be opened or closed but not stopped in mid-travel.
  - Three-wire inching – Two momentary contacts; valve can be opened, closed, and stopped in mid-travel.
- Multi-mode control – Three modes of remote control are permitted when the MX is configured for multi-control: digital (discrete) control, analog control or network (fieldbus) control. The MX will respond to the last command received. However, analog (modutronic) control is initiated by either toggling MX User Input 2 (configured for CSE input) or removing and reapplying the 4-20 mA analog signal. Refer to LMENTB2300 for further information.
- Monitor relay – Provides an N/O and N/C contact representing "Actuator available for remote operation."
- Emergency Shutdown (ESD) – A remote, external ESD signal may be applied to the actuator to move the valve to a predetermined user-configured shutdown position, overriding existing control signals.
- User defined inputs – Three user defined inputs are supplied.
- Inhibit signals – External signals may be used to inhibit actuator opening, closing, or both.
- Control signals – The control signal can be either 24 VDC or optional 125 VAC; it can be sourced from the actuator or customer supply.
- Status contacts (4) – May be set to represent up to 25 actuator conditions.

Protection features

- Autophase protection and correction – Assures proper open/close directions and monitors and corrects phasing if connected improperly. Prevents operation if a phase is lost.
- Jammed valve – Automatically initiates a forward/reverse cycle to free jammed valves.
- Instantaneous reversal protection – Incorporates the proper time delay between the motor reversals to reduce current surges and extend contactor life.
- Motor thermal protection – A thermistor, placed within the motor, protects against overheating.
- LimiGard™ circuit protection – LimiGard consists of dedicated circuitry that continually monitors the motor controller, control relays, internal logic circuits and external command signals. When the recommended wiring connections are made, it virtually eliminates unexpected, erroneous actuation caused by internal electronic failures and erratic external command signals. Additionally, in the event of malfunction, LimiGard supervises the actuator response, detects the source of the failure and signals an alarm.

Optional features

- Alarm contacts – Up to eight latched contacts may be set to represent up to 25 key actuator conditions.
- Two-speed timer – A two-speed pulsing timer may be incorporated to support variable stroke times as configured by the user.
- Analog Position Transmitter (APT) – The APT is an internally powered, non-contacting valve position transmitter that provides a 4-20 mA signal proportional to valve position.
- Analog Torque Transmitter (ATT) – The ATT is a non-contacting, internally powered transmitter that provides a 4-20 mA signal that is proportional to actuator output torque.
- Modutronic controller – The Modutronic controller positions the valve in response to an external 4-20 mA command signal. It includes automatic pulsing mode to prevent overshoot at the set point. Parameters that may be set easily during configuration include proportional band, dead band, polarity, and action on loss of command signal.
- Solid State Motor Reverser (SSMR) – An SSMR is available when severe operating conditions demand continuous operation.
- Partial stroke and momentary closure ESD – The partial stroke and momentary closure ESD signals are configurable by the user. It can also be supplied with a momentary closure contact initiated ESD signal routine with redundant circuitry.
- Arctic temperature – The MX is suitable for installation and operation in severely cold climates to -60°C (-76°F). There is no need for external heat sources to supplement the internal power—the MX is predictable and reliable even in the most rugged applications.
- Control Station (CSE) – The CSE is a separate control station designed for the operation of inaccessible actuators. It is available with LEDs, Remote/Local and Open/Close selector switches. The CSE may be powered by the actuator internal supply, provided wire resistance and other external loads do not limit the available signal power presented to the MX.

- Isolation and Load Break Switches – Isolation and Load Break Switches can be supplied for the incoming three-phase supply to the actuator. These may be coupled directly to the actuator for weatherproof (WP) applications only or supplied separately for mounting by user. The enclosure is suitable for weatherproof or temporary submersion service. An explosion-proof (XP) isolation switch is also available for user mounting and is suitable for mounting with all MX actuators. Please contact factory for availability.
- Negative Switching – When remote control systems require the negative pole of the circuit supply to be switched to positive earth, a simple software change is made.
- MX Quik – After the actuator has been powered by line power for one hour, it will automatically withstand most power outages while maintaining the correct state of the S or R status contacts—even if the user repositions the actuator manually with the handwheel. To maximize its self-power time while the line power is lost, the actuator places itself in its lowest possible power usage mode. The LCD will darken (sleep mode) until it is activated for viewing. The LCD can be activated by moving the black knob to OPEN (YES) or by moving the actuator with the handwheel. After 10 seconds of inactivity, the LCD will return to sleep mode.

Bluetooth capable options

Standard low power wireless communication path to the actuator enables monitoring and configuration of the unit up to 10m in any direction via a Bluetooth equipped PC, PDA, smart cell phone, etc. FHSS (Frequency Hopping Spread Spectrum) allows a reliable communication link even in a "noisy" environment and 128 bit data encryption can be enabled to protect the privacy of the link. MX Dashboard configuration / diagnostics tools can use the Bluetooth link as a means for communicating with the actuator. A visible blue LED in the controls LCD window on the face of the actuator signifies an active Bluetooth link to the actuator has been established.

Network Communications

The MX provides a comprehensive network option portfolio to the User. Network solutions are improved with the addition of DeviceNet to complement Modbus, Foundation Fieldbus H1, Profibus DP_V1 and Profibus PA. MX provides the User with predictable, reliable, and safe operation for years to come, in applications which are subject to the most rigorous requirements and environmental extremes.

DDC Modbus (Distributed Digital Control) Communication

DDC is Flowserve Limitorque's digital communication control system that provides the ability to control and monitor up to 250 actuators over a single twisted-pair cable. The communication network employs Modbus protocol on an RS-485 network and is redundant. Redundancy assures that any single break or short in the communication cable will not disable any actuators. Each actuator has included an addressable field unit that communicates over the twisted pair network and executes open, close, stop, ESD, and GO TO position commands. The field unit also communicates all actuator status and alarm diagnostic messages over the same communication network.

DDC Network

- Single-ended loop (consult factory)
- Modbus protocol
- High speed – up to 19.2 k baud

Master Station III

MX units equipped with DDC can be controlled via Flowserve Limitorque's Master Station III. It includes:

- Host interface – Industry standard Modbus Rtu, ASCI, UDP, and TCP/IP protocols and control
- 5.6" TFT touch-screen display for network configuration status
- Configurable polling sequence priority
- Network time protocol for time synchronization of alarms/ diagnostics data to host device
- Modular hot-swappable redundant design
- E-mail notifications of alarm conditions
- Data/event logging

Foundation Fieldbus communication with Device Type Manager (DTM) technology

The MX can be fitted with Foundation Fieldbus protocol that complies with the IEC 61158-2 Fieldbus H1 standard. The field unit device is able to support several topologies such as point-to-point, bus with spurs, daisy chain, tree or a combination of these. The FF device has network features that include:

- Link Active Scheduler that controls the system
- High-speed communications up to 31.25 kbits/sec
- Publisher-subscriber communication
- Input and output function blocks
- Device descriptions
- Network communication
- Configurable by user

Link Active Scheduler communication: Fieldbus segments have one active Link Active Scheduler (LAS) at a given time, which is the bus arbiter, and does the following:

  – Recognizes and adds new devices to the link
  – Removes non-responsive devices from the link
  – Schedules control activity in, and communication activity between, devices
  – Regularly polls devices for process data
  – Distributes a priority-driven token to devices for unscheduled transmissions
  - DTM technology includes PID (proportional integral derivative) and partial stroke (PS) feature

PROFIBUS DP V1 communication with DTM

The MX can be fitted with Profibus DP_V1 protocol field units that comply with EN50170 Fieldbus Standard for RS-485 communications. The device supports several topologies such as point-to-point, bus with spurs, daisy chain, tree or a combi-nation of these. The PB device has network features that include:

- High-speed communications up to 1.5 Mbps
- Master-to-slave communication
- Standby communication channel
- Analog and digital input and output function blocks
- Device descriptions configurable by user
- High-Speed Data Exchange – Startup Sequence
- Power On / Reset – Power On / Reset of master or slave
- Parameterization – download of parameters into field device (selected during configuration by the user)
- I/O Configuration – download of I/O configuration into the field device (selected during configuration by the user)
- Data Exchange – cyclic data exchange (I/O Data) and field device reports diagnostics
- Redundant Profibus DP with single or multiple – master communications

PROFIBUS PA communication with DTM

A Profibus PA protocol is available and complies with EN50170 Fieldbus Standard and Fieldbus physical layer per IEC 61158-2 for communications. The device supports several topologies such as point-to-point, bus with spurs, daisy chain, tree or a combination of these. The PB device has network features that include:

- High-speed communications up to 31.25 kbits/s with Manchester coding
- Master-to-slave communication
- Bus powered for 9-32 VDC and 15 mA per actuator
- Standby communication channel
- Analog and digital input and output function blocks
- Device descriptions
- Configurable by user

The Profibus DP-V1/PA DTM V 1.0 is a software component that contains device-specific application information. The DTM can be integrated into engineering and FDT frame applications, such as stand-alone commissioning tools or asset management systems that are equipped with FDT interfaces. FDT technology is independent from any specific communication protocol, device software or host system, allowing any device to be accessed from any DCS host through any protocol.

DeviceNet

DeviceNet complies with CAN-based protocol and provides the following features:

- DeviceNet Group 2 Server implementation
- Master-to-slave communication
- Bus-powered network interface allows power alarm information to be communicated when actuator loses main power; the actuator does NOT drop off the network when power is lost
- Standard polled I/O connection
- Standard bit strobed I/O connection
- Standard change of state / cyclic I/O connection
- Standard explicit connections defined as:
  – Various assembly objects and sizes that allow the network user to determine how much data to transfer to accommodate network installation data throughput requirements
  – Automatic baud rate detection
  – Node address configurable via local setup menu or via the remote network user
  – Broadcast or group network originated ESD support

MX Series Performance Ratings for Units 05 through 150

MX-05 through MX-40 (three-phase: 50 Hz/380, 400, 415, and 440 Volt: 60 Hz/208, 230, 380, 460, 525, 575 Volt)

MX-85 through MX-150 (three-phase: 50 Hz/380, 400, and 415 Volt: 60 Hz/380, 460, 575 Volt)*

*380/50 multiply by 0.9

Output Speed (RPM)				MX-05		MX-10		MX-20		MX-40		MX-85		MX-140		MX-150	
				Rated Output Torque													
60 Hz		50 Hz		ft-lb	N m	ft-lb	N m	ft-lb	N m	ft-lb	N m	ft-lb	N m	ft-lb	N m	ft-lb	N m
18		15		55	75	125	170	225	305	440	597	N/A	N/A	N/A	N/A	N/A	N/A
26		22		55	75	125	170	225	305	440	597	850	1153	1500	2036	N/A	N/A
40		33		55	75	125	170	225	305	440	597	1225	1662	1700	2307	N/A	N/A
52		43		55	75	125	170	225	305	440	597	1150	1561	1600	2171	N/A	N/A
77		65		48	65	107	145	178	241	345	468	850	1153	1200	1628	N/A	N/A
100	131[1]	84	110[1]	39	53	89	121	148	201	286	388	600	814	815	1105	1500	2036
155	170[1]	127	143[1]	41	56	89	121	140	190	260	353	450	611	650	882	1150	1561
200		165		34	46	73	99	114	155	210	285	N/A	N/A	N/A	N/A	N/A	N/A

Note 1: MX-85, MX-140 and MX-150

	lb	kN	lb	kN	lb	kN	lb	kN	lb	kN	lb	kN	lb	kN
Thrust Ratings (lb/kN)	8000	35	15000	66	25000	111	36000	160	50000	222	75000	333	75000	333
B4 Base (Torque Only)	**lb**	**kg**	**lb**	**kg**	**lb**	**kg**	**lb**	**kg**	**lb**	**kg**	**lb**	**kg**	**lb**	**kg**
Weights (lb/kg)	52	24	65	29	109	49	133	60	250	114	300	136	431	182

A1 Base (Thrust Only) Weight	lb	kg
MX-05 & MX-10	9	4
MX-20 & MX-40	29	13
MX-85 w/ F16/FA16 base	72	33
MX-140/MX-150 w/ F25/FA25 base	111	50

Maximum Stem Capacity

Type A Couplings	in.	mm	in.	mm	in.	mm	in.	mm	in.	mm	in.	mm	in.	mm
Type A1	1.26	32	1.57	40	2.36	60	2.64	67	3.50	88	3.50	88	3.50	88
Type A1E (Extended Nut)	1.26	32	1.57	40	2.36	60	2.64	67	3.50	88	3.50	88	3.50	88
Type B Couplings (Torque Only)[2]	**in.**	**mm**	**in.**	**mm**	**in.**	**mm**	**in.**	**mm**	**in.**	**mm**	**in.**	**mm**	**in.**	**mm**
Type B4	1	25.4	1.25	30	1.94	50	2.2	55	2.88	73	2.88	73	2.625	65
Type B4E (Extended)	0.75	19	0.91	22	1.56	41	1.78	46	2.25	57	2.25	57	2.625	65
Type B1 (Fixed Bore)[3]	N/A	42	N/A	42	N/A	60	N/A	60	N/A	N/A	N/A	N/A	N/A	N/A
Type BL (Splined)	6 & 38 Splines		6 & 38 Splines		6 & 36 Splines		6 Splines		N/A	N/A	N/A	N/A	N/A	N/A
Maximum Bore and Keyway	**in.**	**mm**	**in.**	**mm**	**in.**	**mm**	**in.**	**mm**	**in.**	**mm**	**in.**	**mm**	**in.**	**mm**
Maximum Bore (B4)	1	25	1.25	30	1.94	50	2.2	55	2.75	65	2.65	65	2.625	65
Maximum Keyway	¼ sq.	8 x 7	¼ sq.	10 x 8	½ x ⅜	14 x 9	½ x ⅜	16 x 10	⅝ x 7/16	18 x 11	⅝ x 7/16	18 x 11	⅝ x 7/16	18 x 11
Maximum Bore (B4E)	.75	18	0.91	22	1.56	41	1.78	46	2.25	56	2.25	56	2.5	65
Maximum Keyway	3/16 sq.	6 x 6	¼ sq.	8 x 7	⅜ sq.	12 x 8	½ x ⅜	14 x 9	½ x ⅜	16 x 10	½ x ⅜	16 x 10	0.625 sq.	18 x 11

Note 2: Maximum bores for Type B couplings may require rectangular keys.

Note 3: Available in ISO base only.

	MX-05	MX-10	MX-20	MX-40	MX-85	MX-140	MX-150
Mounting Base (MSS SP-102/ISO 5210)	FA10/F10	FA10/F10	FA14/F14	FA14/F14	FA16/F16	FA25/F25	FA25/F25
Handwheel Ratio (STD/Optional)	Direct	Direct/8:1	Direct/12:1	Direct/24:1	16/48	16/48	16/48
Side-Mounted Handwheel Efficiencies	N/A	52%	54%	51%	53%/51%[4]	53%/51%[4]	53%/51%[4]

Note 4: Efficiencies for MX-85, MX-140 and 150 are 51% with SGA and 53% without SGA.

MX Standard & Optional Features

Limitorque MX electronic valve actuators are designed for the operation of ON-OFF and modulating valves. They include a three-phase electric motor, worm gear reduction, absolute encoder, electronic torque sensor, reversing motor contactor, electronic control, protection and monitoring package, handwheel for manual operation, valve interface bushing, 32-character LCD, and local control switches—all contained in an enclosure sealed to NEMA 4, 4X, 6, and IP68. Explosionproof (XP) enclosures can also be provided when required. All MX actuators comply with applicable European Directives and exhibit the CE mark.

Power transmission and lubrication

All mechanical gearing components are bearing supported, and final drive (output) consists of a hardened alloy steel worm and alloy worm gear. All gears are immersed in an oil-bath lubricated with a synthetic oil designed specifically for extreme pressure worm and worm gear transmission service. Special lubricants are available for operation in temperatures of less than -30°C. Consult factory.

LUBRICATION & TEMPERATURE RANGE	SYNTHETIC BRAND
Standard Lubrication, -30ºC to +70ºC	Mobil SHC 323
Optional Food Grade Lubrication, -30ºC to +70ºC	Dow Molykote

Motor

The MX motor is a 3-phase squirrel cage designed for electronic valve actuators. It is specifically designed for the MX actuator and complies with IEC 34, S2-33 percent duty cycle at 33 percent of rated torque. The motor is a true bolt-on design with a quick-disconnect plug that can be changed rapidly without sacrificing motor leads. It is equipped with a solid-state motor thermistor to prevent damage due to temperature overloads.

ON-OFF MODULATING
Standard insulation class is F to IEC 34, S2-33% for stated operating times 100-600 starts per hour
600-1200 starts per hour, IEC 34, S4_33%_1200 S/H

The MX motor permits a global range of 3-phase voltages to be connected without modification. The motor can energize, provided either of the listed voltages are connected:

Phase/Frequency	Application Voltage
3ph - 60 Hz	208, 220, 230, 240, 380, 440, 460, 480, 550, 575, 600
3ph - 50 Hz	380, 400, 415, 440, 525

Electronic control modules

Non-intrusive

The MX is non-intrusive, which means that all calibration/configuration is possible without removing any covers and without the use of any special tools. All calibration is performed in clear text languages; no icons are used. All configuration is performed by answering the “YES” and “NO” questions displayed on the LCD. “YES” is signaled by using the OPEN switch and “NO” by using the CLOSE switch, as indicated adjacent to the switches.

Double-sealed terminal compartment and terminal block

All customer connections are located in a terminal chamber that is separately sealed from all other actuator components. Site wiring doesn’t expose actuator components to the environment. The internal sealing within the terminal chamber is suitable for NEMA 4, 6, and IP68 to 15M for 96 hours. The terminal block includes screw-type terminals; three for

power and 54 for control. Customer connections are made via conduits located in the terminal housing.

Three Standard Conduit Openings (NPT threads standard, M optional)
(2) – 1.25" NPT or M32 (optional)
(1) – 1.5" NPT (standard) or M38 (optional)

Controls

The controls are all solid state and include power and logic circuit boards and a motor controller that performs as the motor reverser, all mounted to a steel plate and attached in the control compartment with captive screws. All internal wiring is flame resistant, rated 105°C, and UL/CSA listed.

The controls are housed in the ACP (Actuator Control Panel) cover, and the logic module uses solid-state Hall-effect devices for local communication and configuration. A 32-character, graphical LCD is included to display valve position as a percent of open, 0-100% and current actuator status. Red and green LEDs are included to signal 'Opened' and 'Closed,' and are reversible, and a yellow LED to indicate 'Valve Moving.' A blue LED is included when the Bluetooth option is ordered. A padlockable LOCAL-STOP-REMOTE switch and an OPEN-CLOSE switch are included for local valve actuator control

Using the knobs and LCD screen the MX is configurable in 10 languages: English, Spanish, French, German, Portuguese, Italian, Mandarin, Russian, Bahasa Indonesia and Katakana.

S contacts for remote indication

As standard, two pairs of latched status contacts rated 125 VAC, 0.5 A and 30 VDC, 2 A are provided for remote indication of valve position, configured as 1-N/O and 1-N/C for both the open and closed positions. Two contacts may be configured to represent any other actuator status and the other two will be complementary. The contacts may be configured in any of the selections depicted in the "Actuator Status Message" column.

"S" Contact AC	"S" Contact DC
0.5 Amps @ 125 VAC	1A @ 50 VDC, 2A @ 30 VDC (Resistive)

Actuator Status Message	Function
"CLOSED"	– valve closed "(0% OPEN)"
"OPENED"	– valve open "(100% OPEN)"
"CLOSING"	– valve closing
"OPENING"	– valve opening
"STOPPED"	– valve stopped in mid-travel
"VALVE MOVING"	– either direction
"LOCAL SELECTED"	– red selector knob in "LOCAL"
"MOTOR OVERTEMP"	– thermistor range exceeded
"OVERTORQUE"	– torque exceeded in mid-travel
"MANUAL OVERRIDE"	– actuator moved by handwheel
"VALVE JAMMED"	– valve can't move
"CLOSE TORQUE SW"	– torque switch trip at "CLOSED"
"OPEN TORQUE SW"	– torque switch trip at "OPEN"
"LOCAL STOP/OFF"	– red selector knob at "STOP"
"LOST PHASE"	– one or more of the incoming supply lost
"ESD SIGNAL"	– signal active
"CLOSE INHIBIT"	– close inhibit signal active
"OPEN INHIBIT"	– open inhibit signal active
"ANALOG IP LOST"	– 4-20 mA not present
"REMOTE SELECTED"	– red selector in "REMOTE"
"HARDWARE FAILURE"	– indication
"NETWORK CONTROLLED"	– permits relay control via DDC, FF, or other network driver
"FUNCTION"	– LimiGuard circuit protection activated
"MID-TRAVEL"	– valve position, 1-99% open
"CSE CONTROL"	– CSE station in LOCAL or STOP and controls actuator

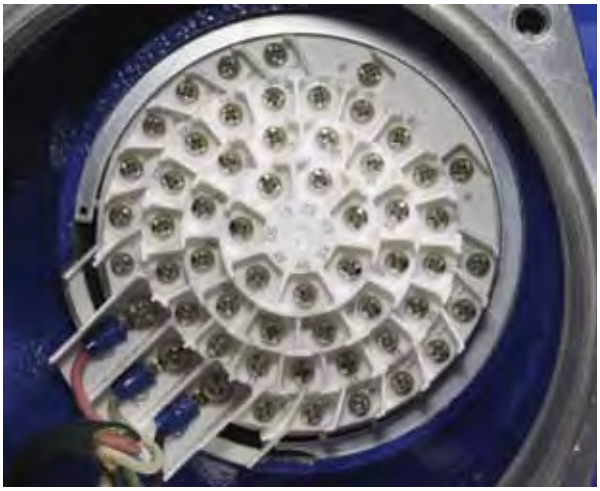

Monitor relay for remote indication
A monitor relay is included as standard and trips when the actuator is not available for remote operation. Both N/O and N/C contacts are included, rated 125 VAC, 0.5 A and 30 VDC, 2 A. The monitor relay can be configured for three additional fault indications: lost phase, valve jammed and motor Overtemp. The yellow LED will blink when the monitor relay is active. The user can disable the monitor relay, if necessary.

Monitor Relay AC	Monitor Relay DC
0.5 Amps @ 125 VAC	1A @ 50 VDC, 2A @ 30 VDC (Resistive)

Remote control
Discrete remote control (user supplied) may be configured as two, three or four wires for Open-Stop-Close control. Remote control functions may be powered by external 24 VDC, 110 VAC, or the actuator's internal 24 VDC supply or optional 110 VAC supply. The internal supplies are protected against over current and short circuit faults and utilize optical isolation to minimize electromagnetic interference. Discrete control provides isolated commons for up to three selections.

Signal Threshold for Voltage Values	Maximum Load
5.0 VAC/VDC maximum 'OFF'	24 VDC + 2 mA
19.2 VAC/VDC minimum 'ON'	110 VAC + 10 mA

Speed control
The MX permits operational speeds in either Open and Closed directions to be set independently of each other. The MX also has an industry leading span for the optional two-speed timer.

Two-Speed Timer Span "ON" Pulse	Two-Speed Timer Span "Off" Pulse
0.5 to 20 seconds (0.5 sec. increments)	1.0 to 200 seconds (1.0 sec. increments)

Software

Limigard
A dedicated circuit to prevent undesired valve operation in the event of an internal circuit fault or erratic command signal is included as standard on each Limitorque electronic actuator. A single point failure will not result in erratic actuator movement nor will an open or short circuit in the internal circuit board logic energize the motor controller. The command inputs are optically coupled and require a valid signal pulse width from at least 250 ms to 350 ms to either turn on or off. In the event of an internal circuit fault, an alarm is signaled by tripping the monitor relay and through LCD indication. The control module also includes an auto reversal delay to inhibit high-current surges caused by rapid motor reversals.

Phase detection and correction (three phase)
A phase correction circuit is included to correct motor rotation faults caused by incorrect site wiring or phase switching in the event of a power down. The phase correction circuit also detects the loss of a phase and disables operation to prevent motor damage. The monitor relay will trip and an error message is displayed on the LCD screen when loss of phase occurs.

Multi-mode remote control
The MX is capable of being configured for multi-mode remote control, which permits discrete wiring for either two, three or four wires, or network (Fieldbuses) for Open-Stop-Close control and responds to the last signal received. The actuator can also distinguish analog control for modulating applications. The QX and MX products from Limitorque are the only smart actuators with such features.

ESD
An Emergency Shutdown (ESD) provision is included in each actuator, and the MX has up to three configurable inputs for ESD. The ESD signal(s) can be selected to override any existing signal and send the valve to its configured emergency position. Provision for an isolated common is standard.

Inhibits
The MX has as standard provisions for inhibit movement and also contains up to three configurable inputs. Provision for an isolated common is also standard.

Diagnostics
The MX contains similar diagnostic facilities as the QX. The values are included to accumulate and report the performance of the motor, encoder, motor controller, cycle time, handwheel operations, actuator ID, firmware revision and output turns. In addition, a torque profile of the reference baseline valve stroke and the last valve stroke is included. A feature for resetting the diagnostic odometer is also provided. All diagnostic information is displayed on the LCD and can be acquired over a network if Fieldbus options are purchased. The MX actuator has the ability for diagnostics information to be downloaded to a PC or PDA via both IRDA and Bluetooth ports using the Dashboard software.

Diagnostics also include a Frequency Domain Analysis (FDA) feature. The FDA methodology captures torque, position or speed values at regular time intervals while the actuator is motoring, and calculates the resulting data set with a Fast Fourier Transform (FFT). The resulting information can be used to isolate any components in the mechanical drive train that may exhibit excessive wear or may effect normal actuator operation. The actuator also contains the ability for diagnostics information to be downloaded to a PC or PDA via both IRDA and Bluetooth ports utilizing MX Dashboard.

Valve and actuator position sensing

Valve position is sensed by an 18-bit, optical, absolute position encoder with redundant position sensing circuits designed for Built-In-Self-Test (BIST). Each of the position sensing circuits is redundant, facilitating BIST. The BIST feature discerns which failures will signal a warning only and which require a warning plus safe shutdown of the actuator. Open and closed positions are stored in permanent, nonvolatile memory. The encoder measures valve position at all times, including both motor and handwheel operation, with or without power present, and without the use of a battery. The absolute encoder is capable of resolving ±7° of output shaft position over 10,000 output drive rotations. This design permits continuous monitoring of valve position during motor and handwheel operation. The encoder is 100% repeatable and requires no backup power source for operation. The output is used to control the open and closed valve position and measure and report valve position, as well as provide local and remote position feedback. The positioning accuracy is better than 99% for valves requiring 50 or more turns.

- Maximum actuator turns = 10,000
- Resolution = ± 7 degrees

Valve and actuator torque sensing

The MX and QX are the only electric actuators that sense torque electronically. A microprocessor calculates output torque from motor speed, voltage, and temperature. Torque limit may be set from 40–100% of rating in 1% increments. A boost circuit is included to prevent torque trip during initial valve unseating and in cold climates. A "Jammed Valve Protection" feature, with automatic retry sequence, is included to de-energize the motor if the output torque requirement exceeds the boost torque. A boost function is included to prevent torque trip during initial valve unseating and during extreme arctic temperature operation (from 0ºC down to -60ºC). The MX monitors for "jammed valve" as a protection feature and initiates an automatic retry sequence if no movement occurs.

Exterior corrosion protection

The MX actuator is coated with as standard a polymer powder coat suitable for exposure to an ASTM B117 salt spray test of 1,500 hours. External fasteners are 300 series stainless steel. Optional coatings are available by contacting factory.

Manual operation

A handwheel and declutch lever are provided for manual operation. The handwheel is metal and changing from motor to manual operation is accomplished by engaging the declutch lever. Energizing the motor returns the MX to motor operation. The lever is padlockable in either motor or manual operation. Optional configurations for handwheels are available by consulting the factory.

Factory testing

Every MX actuator is factory tested to verify rated output torque, output speed, handwheel operation, local control, control power supply, valve jammed function, all customer inputs and outputs, motor current, motor thermistor, LCD and LED operation, direction of rotation, microprocessor checks and position-sensor checks. A report confirming successful completion of testing is included with the actuator. Special testing can also be performed by contacting the factory.

Design life and endurance testing

- Design Life - One million drive sleeve turns is considered typical life expectancy under normal operating conditions approved ambient working environments.
- Endurance – 50 million collective drive sleeve turns of endurance testing were performed on the MX for proof of design.
- AWWA C540-02 – "Standard for Power Actuating Devices for Valves and Sluice Gates" – 10,000 cycles with confirmation of specified torque and position accuracy.

Options

Lost power buffer and 24 VDC UPS

Terminals are included and can be used to optionally connect the electronic controls package, including display, to a backup 24 VDC power source. Another option is the MX Quik. Once the actuator has been powered by line power for one hour, it can automatically withstand most power outages while maintaining the correct state of the alarm and status contacts, even if the user repositions the actuator manually with the handwheel. To maximize its self-power time while the line power is lost, the actuator will place itself in its lowest possible power usage mode. The LCD will darken (sleep mode) until it is needed to be viewed. The LCD can be activated by moving the black knob to OPEN (YES) or by moving the actuator with the handwheel. After 7-8 seconds of inactivity, the LCD will return to sleep mode. This feature can last up to three hours and automatically recharges once main power is restored.

The use of batteries to perform this function is not required.

Analog Position Transmitter (APT)

A non-contacting, internally powered, electrically isolated position transmitter can be included to provide a 4-20 mA or 0-10 VDC signal that is proportional to valve position.

Analog Torque Transmitter (ATT)

A non-contacting, internally powered, electrically isolated torque transmitter can be included to provide a 4-20 mA or 0-10 VDC signal that is proportional to rated output torque.

Voltages or Currents for APT/ATT	Maximum/Minimum External Load - APT/ATT
4-20 mA	470 ohms - 99.9% accuracy/ 750 ohms for 99% accuracy
0-10 VDC	1000 ohms minimum - 99.9% accuracy/ 2700 ohms minimum - 99% accuracy

Modutronic option

A controller that alters valve position in proportion to a 4-20 mA analog command signal can be ordered. Positioning is accomplished by comparing the command signal to a non-contacting internal position feedback. An automatic pulsing feature to prevent overshoot at the setpoint is included. Proportional bands, deadband, signal polarity, motion inhibits time, and fail are adjustable using either the Local control mode of configuration or MX/QX Dashboard. Deadband is adjustable to 0.5 percent full span.

Voltages or Currents for Modulation	Input Impedance/Capacitance
4-20 mA	150 ohms Impedance
0-10 VDC	0.1 µF +/- 30%

Relays for status and alarms

Up to eight additional latching output contacts rated 250 VAC/30 VDC, 5 A and configurable to represent any actuator status in either N/O or N/C state are available. Please refer to “Status and Alarm Contacts for Remote Indication” for list of settings.

“R” Contact and Monitor Relay AC Ratings	“S” Contact and Monitor Relay DC Ratings
5.0 Amps @ 250 VAC	1A @ 50 VDC, 5A @ 30 VDC (Resistive)

Custom software—Momentary contact ESD and partial stroke ESD

An optional, custom software is available which, when combined with the unique safety features of the MX actuator, permits a unique scope of performance for partial stroke and emergency shutdown installations.

When enabled a user may set up the partial stroke and ESD signals as redundant digital inputs for safety. There are two signal inputs for either selection, and both must be in the active state in order for the specific function to occur.

If the partial stroke enable inputs are not active, in a fault state, or are released by the control logic and a signal is detected on the momentary ESD/PSESD input, then the actuator will perform the configured ESD operation. The momentary ESD/PSESD input will be ignored if there is a signal present for less than 100 msec, and is guaranteed to latch in the ESD/PSESD if the signal is present for greater than 800 msec. ESD is active until the control logic ESD release is given.

Please contact factory for application and purchase.

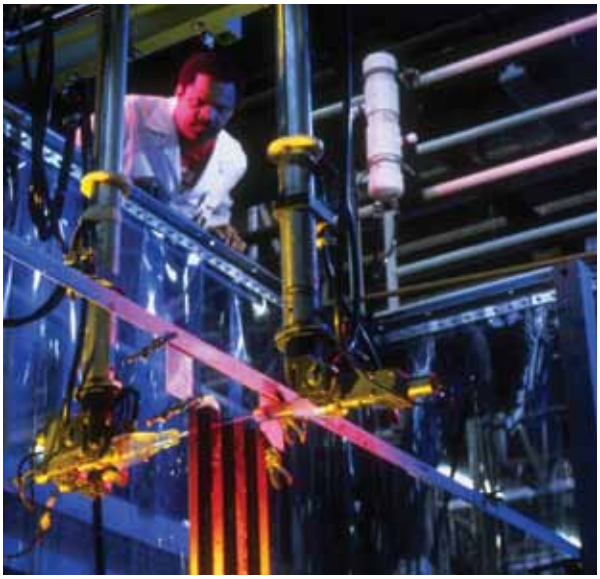

Global Certifications

Non-hazardous (weatherproof / submersion) certifications
IEC 529 protection code IP68; 15 meters for 96 hours
USA & CSA; NEMA 3, 4, NEMA 4X, NEMA 6

Geographic Locations	Weatherproof/ Submersion	Standard Temperature	Optional Temperature
IEC 529 Protection Code IP68	15M for 96 hours	-30ºC to +70ºC (-22ºF to 156ºF)	-50ºC to +50ºC (-58ºF to 122ºF)
USA & Canada, NEMA 3, 4, 6	20 ft. for 24 hours	-30ºC to +70ºC (-22ºF to 156ºF)	-50ºC to +50ºC (-58ºF to 122ºF)
USA & Canada, NEMA 4X	1500 hrs. to ASTM B117	-30ºC to +70ºC (-22ºF to 156ºF)	-50ºC to +50ºC (-58ºF to 122ºF)

Standard hazardous global certifications
FM – Class I, Groups B, C & D, Div. 1 and Class II, Groups E, F and G, T4

ATEX EExd IIB T4 ATEX II 2 G, CENELEC Norm EN 60079-0:2006 and EN 60079-1:2004

ATEX EExd IIC T4 ATEX II 2 G, CENELEC Norm EN60079-1:2004

EEx de IIB T4 ATEX II G, Increased Safety, CENELEC Norm EN 60079-7:2003

ATEX EEx de II C T4

CSA – Class I, Group C & D, Div. 1 and Class II, Groups E, F & G, T4

GOST and GOST R to GOST 12.2.007.0-75; GOST R 51330.0-99; GOST R 51330.1-99

GOST R 51330.8-99; Rules for electric devices (7.3).

GOST-K , No. KCC007776

Ex d IIB T4 -60°C ≤ TAMB ≤ +60°C; IP68 - Size 05, 10, 20, 40. Actuators with marked TAMB below -20°C require special construction. Contact factory.

Ex d IIB (or IIC) T4 -20°C ≤ TAMB ≤ +60°C; IP68 - Size 05, 10, 20, 40, 85, 140, or 150

Ex d e IIB (or IIC) T4 -20°C ≤ TAMB ≤ +60°C; IP68 - Size 05, 10, 20, 40, 85, 140, or 150. Group IIC design also available and requires special construction. Contact factory

Geographic Locations	Explosionproof Classifications	Standard Temperature	Optional Temperature
USA to Factory Mutual (FM)	Class I, Groups B, C, & D, Div. 1, T4 and Class II, Groups E, F, & G, Div. 2, T4	-30ºC to +65ºC (-22ºF to 149ºF)	-50ºC to +40ºC (-58ºF to 104ºF)*
Canada to Canadian Standards Association	Class I, Groups B, C, & D, Div. 1, T4 and Class II, Groups E, F, & G, Div. 2, T4	-30ºC to +65ºC (-22ºF to 149ºF)	-50ºC to +40ºC (-58ºF to 104ºF)*
ATEX II 2 G, CENELEC Norm EN 50014 & 50018	Eex d IIB T4, Eex d IIC T4, and Eex de IIB T4, Eex de IIC T4	-30ºC to +65ºC (-22ºF to 149ºF)	-60ºC to +40ºC (-76ºF to 104ºF)*
ANZEX	Ex d IIb T4 & Ex de IIB T4 and Ex d IIC T4 & Ex de IIC T4	-30ºC to +65ºC (-22ºF to 149ºF)	NA
IECEx	Ex d IIB T4; IP68 & Ex d IIB (or IIC) T4; IP68 & Ex d e IIB (or IIC) T4	-20ºC to +60º -4ºF to 140ºF)	-60ºC to +60ºC (-74ºF to 140ºF)*

NOTE: Options are available to -60°C for GOST and GOST-R. Consult factory for availability. *Consult factory for limitations.

European directives

All MX actuator designs have been tested to comply with pertinent EU Directives and shipped with the Declaration of Conformity listed in the Regulatory Section of LMENIM2306 and LMENIM2314. The actuator is also tagged with the CE mark to demonstrate compatibility with the following European Directives:

All MX actuator designs have been tested to demonstrate compatibility with the following European directives and are marked with the CE label:

- 89/392/EC - Machinery Directive
- Vibration and seismic capability is in accordance with MILSTD-167, IEEE-344-1975, and IEC68-2-6. Test performed in each of three (3) axes, H1, horizontal – parallel to motor, H2, horizontal – perpendicular to motor, and “V1,” vertical.

Vibration Levels (MX functions after event)	Seismic Levels (MX functions after event)
5-100-5 Hz sweeps at 0.75g acceleration in 3 axes	5.0g acceleration from 3.5 – 31 - 3.5 Hz sine dwells in 3 axes
2-35-1 Hz sweeps at 1.0 g acceleration in 3 axes	3.0g acceleration from 35 - 200 Hz sine dwells in 3 axes
1-500-1 Hz sweeps @ 2.0 g acceleration in 3 axes	
25 Hz dwell @ 2.0 g acceleration in 3 axes	

- Drop test – ASTM-D3332-88, method A
- 2003/10/EC -Airborne Noise to EN 60204-1
  The MX has been tested for noise emissions and at 1 m distance is less than 74 dB per grade A noise requirement of MIL-STD-740 and ANSI/ISA-S82.01-1994 (harmonized std. to IEC 1010-1).
- 2004/108/EC -EMC – Electromagnetic Compatibility and 93/68/EC -Low Voltage; EN 50081-1 & 2 – actuator complies with all pertinent requirements of Class A service categories in the listed table.

Conduit entries

Three threaded conduit entries are provided tapped: 1 x 1½˝ and 2 x 1¼˝ NPT. Unless otherwise specified, actuator will be dispatched with adapters: 1 x M40 and 2 x M32 metric to BS3643, PG adapters are available upon request.

Applicable Emissions standards	EN50011:1998	Class A service	
Radiated emissions	EN55011:1998 & FCC Part 15, subpart J	30-130MHz 40dBmV / m 230-1000MHz 47dBmV / m	
Conducted emissions	EN55011:1998 & FCC Part 15, subpart J	0.15 to 0.5MHz 79dBmV (QuasiPeak 66dBmV avg) 0.5 to 30MHz 73dBmV (QuasiPeak 60dBmV avg)	
Applicable immunity standards	IEC EN 61000-6-1:2001		
ESD	IEC61000-4-1:1995	±8kV thru air ±4kV thru contact	
Radiated RF immunity	IEC61000-4-3:1995	80MHz to 2GHz 10Vrms / m	
Fast transients/burst	IEC61000-4-4:1995	EFT AC Power leads: ±2kV Signal leads: ±1kV	
Voltage surges	IEC61000-4-5:2001	AC Power: ±2kV com, ±1kV diff Signal leads: ±0.5V com, ±1kV diff	Perf criterion: B
Conducted RF immunity	IEC61000-4-6:1996	150kHz to 80MHz 10Vrms	Perf criterion: A w/ 80% AM modulation @ 1KHz
Magnetic field immunity	IEC61000-4-8:1993	Power line frequency 30A/m @ 60Hz	Perf criterion: A
Voltage dips and interrupts	IEC6326-1:2005 (IEC61000-4-11:2004)	60Hz 100% dip, 1 cycle duration 40% dip, 10 cycle duration 70% dip, 25 cycle duration 100% interrupt for 5s	Perf criterion: B, C 3 test each @ 10 sec interval 3 test each @ 10 sec interval 3 test each @ 10 sec interval 3 test each @ 10 sec interval

• Di-electric – Motor per NEMA MG1-12.02 and .03 with leakage of less than 10 mA. Control terminals per IEC-1131-2 and CSA C22.2 with check against physical breakdown.

FLOWSERVE

FCD LMENBR2302-04 Printed in USA.

To find your local Flowserve representative:

For more information about Flowserve Corporation, visit www.flowserve.com or call USA 1 800 225 6989

Flowserve Corporation has established industry leadership in the design and manufacture of its products. When properly selected, this Flowserve product is designed to perform its intended function safely during its useful life. However, the purchaser or user of Flowserve products should be aware that Flowserve products might be used in numerous applications under a wide variety of industrial service conditions. Although Flowserve can (and often does) provide general guidelines, it cannot provide specific data and warnings for all possible applications. The purchaser/user must therefore assume the ultimate responsibility for the proper sizing and selection, installation, operation, and maintenance of Flowserve products. The purchaser/user should read and understand the Installation Operation Maintenance (IOM) instructions included with the product, and train its employees and contractors in the safe use of Flowserve products in connection with the specific application.

While the information and specifications contained in this literature are believed to be accurate, they are supplied for informative purposes only and should not be considered certified or as a guarantee of satisfactory results by reliance thereon. Nothing contained herein is to be construed as a warranty or guarantee, express or implied, regarding any matter with respect to this product. Because Flowserve is continually improving and upgrading its product design, the specifications, dimensions and information contained herein are subject to change without notice. Should any question arise concerning these provisions, the purchaser/user should contact Flowserve Corporation at any one of its worldwide operations or offices.

© 2011 Flowserve Corporation, Irving, Texas, USA. Flowserve is a registered trademark of Flowserve Corporation.

Flowserve Corporation
Flow Control

United States
Flowserve Limitorque
5114 Woodall Road
P.O. Box 11318
Lynchburg, VA 24506-1318
Phone: 434-528-4400
Facsimile: 434-845-9736

England
Flowserve Limitorque
Euro House
Abex Road
Newbury
Berkshire, RG14 5EY
United Kingdom
Phone: 44-1-635-46999
Facsimile: 44-1-635-36034

Japan
Limitorque – Nippon Gear Co., Ltd.
Asahi-Seimei Bldg. 4th Floor
1-11-11 Kita-Saiwai, Nishi-Ku
Yokohama-Shi, (220-0004)
Japan
Phone: 81-45-326-2065
Facsimile: 81-45-320-5962

Canada
Flowserve Limitorque
120 Vinyl Court
Woodbridge, Ontario L4L 4A3
Canada
Phone: 905-856-4565
Facsimile: 905-856-7905

Singapore
Flowserve Limitorque
12, Tuas Avenue 20
Singapore 638824
Phone: 65-6868-4628
Facsimile: 65-6862-4940

China
Limitorque Beijing, Pte., Ltd.
RM A1/A2
22/F, East Area, Hanwei Plaza
No. 7 Guanghua Road, Chaoyang District
Beijing 100004, Peoples Republic of China
Phone: 86-10-5921-0606
Facsimile: 86-10-6561-2702

India
Flowserve Limitorque
No.10-12, THE OVAL, Third floor
Venkatnarayana Road
T. Nagar, Chennai 600 017
Phone: +91-44-2432-8755
& +91-44-2432-4801
Facsimile: +91-44-2432-8754

Howard A. Hanson Dam
Additional Water Storage Project

Section 902 Post Authorization Change Validation Study – Fish Passage
King County, Washington

APPENDIX B-7

ENVIRONMENTAL TECHNOLOGIES (HTRW)

Final Integrated Validation Report and

Supplemental Environmental Impact Statement

US Army Corps of Engineers®
Seattle District

TACOMA POWER
TACOMA WATER
TACOMA RAIL
TACOMA PUBLIC UTILITIES

HOWARD A. HANSON DAM
ADDITIONAL WATER STORAGE PROJECT
FISH PASSAGE FACILITY
CONSTRUCTION SUPPORT AREAS

HOWARD A. HANSON DAM
KING COUNTY, WASHINGTON

FINAL ENVIRONMENTAL
CONDITION OF PROPERTY REPORT

February 2022

Prepared By

U.S. Army Corps of Engineers
Seattle District
Environmental Engineering & Technology Section

This page intentionally left blank

1. TABLE OF CONTENTS

Declaration 4
Approval 4
1. Introduction 5
1.1 Purpose 5
1.2 Description of the Project Area 5
1.3 Scope of Work 6
2. Site Description and Physical Setting 6
2.1 General Location 6
2.2 Background and Physical Description 8
2.3 Hydrology and Geology 11
2.4 Regional Climate 13
2.5 Water Quality 13
3. Site History 21
3.1 Site and Adjacent Property History 22
3.2 Past Uses, Operations, and Maintenance 38
4 Environmental Data Base Review 38
4.1 Regulatory Agency Databases Records Search 38
4.2 Recognized Environmental Conditions 41
4.2.1 Milepost 3.5 41
4.2.2 Milepost 4.25 41
4.2.3 Milepost 6.5 41
4.2.4 Sites on south side of Green River immediately downstream of HAHD 41
5 Site Visit and Interview 41
6 Summary of Findings and Conclusions (Environmental Conditions of Property) 42
6.1 Recommendations 42
7 References 43
8 Attachments 44

FIGURES AND TABLES

Figure 1. Howard A. Hanson Dam – Greater Vicinity....7
Figure 2. Fish passage facility excavation at HAHD....9
Figure 3. Howard A. Hanson Dam proposed construction support areas – highlighted in pink....10
Figure 4. Property ownership at and around HAHD (adapted from TPU 2018). 11
Figure 5. Mapped geological units at HAHD and vicinity (adapted from USGS 2000)....11
Figure 6. Bedrock contour map showing historical river channels (in yellow and orange) and proposed FPF (in black). 12
Figure 7. TPU Green River Watershed Water Quality Monitoring Stations (TPU 2018) 15
Figure 8 Locations of TPU Headworks and North Fork Wellfield in relation to HAHD and proposed construction support areas 16
Figure 9 Clean Water Act assessed and listed waters in the vicinity of HAHD (adapted from WADOE 2021a)....17
Figure 10. EDR map of water wells within 1 mile of HAHD....21
Figure 11. 1913 historical topographic map. The site of present-day HAHD is outlined in red. 22
Figure 12. 1952 historical aerial photograph. The site of present-day HAHD is circled in red....23
Figure 13. 1953 historical topographic map. The site of present-day HAHD is outlined in red. 24
Figure 14. 1957 historical aerial photograph. The site of present-day HAHD is circled in red....25
Figure 15. 1968 historical topographic map. The site of HAHD is outlined in red....27
Figure 16. 1968 historical aerial photograph. HAHD is circled in red. 28
Figure 17. 1979 historical aerial photograph. HAHD is circled in red. 29
Figure 18. 1993 historical topographic map. The site of HAHD is outlined in red....30
Figure 19. 1998 historical aerial photograph. HAHD is circled in red. 31
Figure 20. 2003 historical as-built drawing showing storage, stockpiling, and disposal sites. The disposal site referred to is for land deposition of excavated soil and sediments generated during construction of the FPF excavation and cofferdam. HAHD is circled in red....32
Figure 21. 2006 historical aerial photograph. 33
Figure 22. 2009 historical aerial photograph. 34
Figure 23. 2011 historical aerial photograph. 35
Figure 24. 2017 historical aerial photograph. 36
Figure 25. 2021 historical aerial photograph. 37
Figure 26. EDR Radius Map for Sites within 1 Mile of HAHD. 40

Table 1. Clean Water Act assessed and listed waters near HAHD 19
Table 2. Source lists and associated number of sites for HAHD 39
Table 3. Environmental Condition of Property....42

Acronym List

ASTM	American Society for Testing and Materials
AWSP	additional water storage project
CFR	Code of Federal Regulations
EDR	Environmental Data Resources, Inc.
EIS	Environmental Impact Statement
ESA	Phase 1 Environmental Site Assessment
FPF	fish passage facility
HAHD	Howard A. Hanson Dam
HTRW	hazardous, toxic, or radioactive waste
M&I	municipal and industrial
MTCA	Models Toxics Control Act
NFA	no further action
NPL	National Priority List
RM	river mile
TPU	Tacoma Public Utilities
USACE	United States Army Corps of Engineers
U.S. EPA	United States Environmental Protection Agency
USFS	United States Forest Service
UST	Underground Storage Tank
WRDA	Water Resources Development Act

DECLARATION

In accordance with guidance for All Appropriate Inquiry, the author of this report presents the following declarations:

> "I declare that, to the best or my, professional knowledge and belief, I meet the definition of Environmental Professional as defined in 312.10 of 40 CFR Part 312."
>
> "I have the specific qualifications based on education, training, and experience to assess a property of the nature, history, and setting of the Subject Property. I developed and performed the all appropriate inquiries in conformance with the standards and practices set forth in 40 CFR Part 312."

I certify that the property conditions stated in this report are based on a thorough review of records made available and are true and correct to the best of my knowledge and belief.

Prepared by: OSBORNE.JAYSON.BRUCE.1158088734 Digitally signed by OSBORNE.JAYSON.BRUCE.1158088734 Date: 2022.02.16 15:18:02 -08'00'

Jayson Osborne
Remediation Biologist
Seattle District, U.S. Army Corps of Engineers

APPROVAL

In accordance with ER 200-2-3, I have reviewed and approve this Environmental Condition of Property Report.

Approved by: MALMBORG.NATHAN.CHARLES.1258847063 Digitally signed by MALMBORG.NATHAN.CHARLES.1258847063 Date: 2022.02.18 10:41:49 -08'00'

Nate Malmborg
Environmental Compliance Coordinator, HAHD
Seattle District, U.S. Army Corps of Engineers

1. INTRODUCTION

This Environmental Condition of Property Report and Phase I Environmental Site Assessment (Phase 1 ESA) is in preparation of a potential future lease or leases between the United States of America Government and Tacoma Public Utilities. A critical part of the analysis is the evaluation of known and suspected hazardous, toxic, or radioactive waste (HTRW) conditions with the potential to impact the subject properties. This Phase 1 ESA identifies all known and suspected HTRW releases and its scope is limited to the project boundaries

1.1 Purpose

In accordance with Engineering Regulation 200-2-3 (29 October 2010), it is USACE policy to comply with the requirements of the Comprehensive Environmental Response, Compensation and Liability Act of 1980, as amended, to avoid incurring liability to the maximum extent possible as a result of real estate transactions. It is USACE policy to protect Government real estate assets by managing them under applicable Federal, state and local environmental laws and regulations and by performing a comprehensive environmental compliance assessment of outgrants determined by the Seattle District to require oversight. In order for USACE to comply with the requirements of the Comprehensive Environmental Response, Compensation and Liability Act and avail itself of the landowner liability protections afforded under the Comprehensive Environmental Response, Compensation and Liability Act, USACE must perform certain actions to assess the environmental condition of property prior to entering into designated real property transactions. These transactions include fee acquisition of real property on behalf of the United States, leases of USACE controlled property, transfers of jurisdiction between federal agencies and deeds divesting title from the United States.

USACE will assess, determine and document the environmental condition of property in a report. The environmental condition of property report summarizes the historical, cultural, and environmental conditions of the property subject to the real estate transaction and includes references to publicly available and related reports, studies, and permits. The environmental condition of property report must comply with applicable standards for performing either a Phase I or Phase II Environmental Site Assessment as defined in American Society for Testing and Materials ("ASTM") Standard E 1527–05 entitled, "Standard Practice for Environmental Site Assessments: Phase I Environmental Site Assessment Process," or ASTM E 1903 (Standard Guide for Environmental Site Assessments: Phase II Environmental Site Assessment Process), as appropriate. The ESA fulfils the requirements of the Comprehensive Environmental Response, Compensation and Liability Act as amended by Community Environmental Response Facilitation Act. The ESA identifies known and potential sources of environmental risk or liability on the proposed project site, and in the surrounding areas due to HTRW impacts. This information will assist the USACE to manage the lease renewal conditions and avoid HTRW hazards at the project site and the report is based on readily available information.

1.2 Description of the Project Area

To facilitate the construction of the Additional Water Storage Project Fish Passage Facility at the Howard A. Hanson Dam (HAHD), a number of construction support areas have been proposed. These areas would be used by a construction contractor for purposes of construction material laydown,

equipment storage and maintenance, support trailer staging, and contractor employee parking. Most of the proposed sites are on lands owned by USACE and would not require a lease in order for a contractor to use those sites for construction support. The proposed construction support site at Milepost 6.5 is located on land owned by Tacoma Public Utilities (TPU). The proposed support areas located on the south side of the Green River immediately downstream of HAHD are also located on lands owned by TPU. Use of these two support areas would require a lease or agreement with TPU.

1.3 Scope of Work

The scope of work is in general accordance with the ASTM Standard Practices for Environmental Site Assessments: Phase I Environmental Site Assessment Process (ASTM E1527 - 13). These methodologies are described as representing good commercial and customary practice for conducting a Phase I Environmental Site Assessment (ESA) of a property to identify recognized environmental conditions. The project effort includes the following tasks:

- Conduct a record search and review all reasonably attainable federal, state, and local government information and records to determine possible onsite sources of hazardous substances and environmental condition of the project area.
- Analysis of historical data on prior uses of the project site(s) and the surrounding area.
- Interviews with adjacent property owners and/or tenants or other knowledgeable sources.
- Identify contamination sources using data gathered, evaluate what risk they pose, and the environmental condition of the project area.
- Identify all ongoing actions that may affect the environmental conditions of the project area.
- Determine the extent to which recognized environmental conditions may impact, or pose a risk to, the proposed project.

The scope of this report did not include an audit of environmental regulatory compliance issues or permits, wetland delineation, or collection and testing of environmental samples.

2. Site Description and Physical Setting

2.1 General Location

Howard A Hanson Dam (HAHD) is in southeast King County on the Green River near Ravensdale, Washington. The dam is located at river mile (RM) 64.5 in Section 28, Township 21 North, Range 8 East, Willamette Meridian (Figure 1). The Green River's headwaters flow westward from the Cascade crest. Upstream from the reservoir, the river falls over steep, mountainous terrain, restricted by narrow valley walls from its headwaters on Blowout Mountain near Stampede Pass. The dam lies within the Tacoma Public Utilities (TPU) municipal watershed, a primary drinking water supply for the region, and access to much of the 221 square miles of watershed above HAHD is closed to the public. The access road to HAHD is restricted by a guard-controlled gate at the TPU headworks facility. Except for the dam, there is no streamside development in the upper watershed. Aside from the TPU watershed, the rest of the area is under ownership of private timber companies, the BNSF Railway Company, the Washington State Department of Natural Resources, and the US Forest Service (see Figure 4). US Forest Service (USFS) land is managed as part of the Mt. Baker-Snoqualmie National Forest.

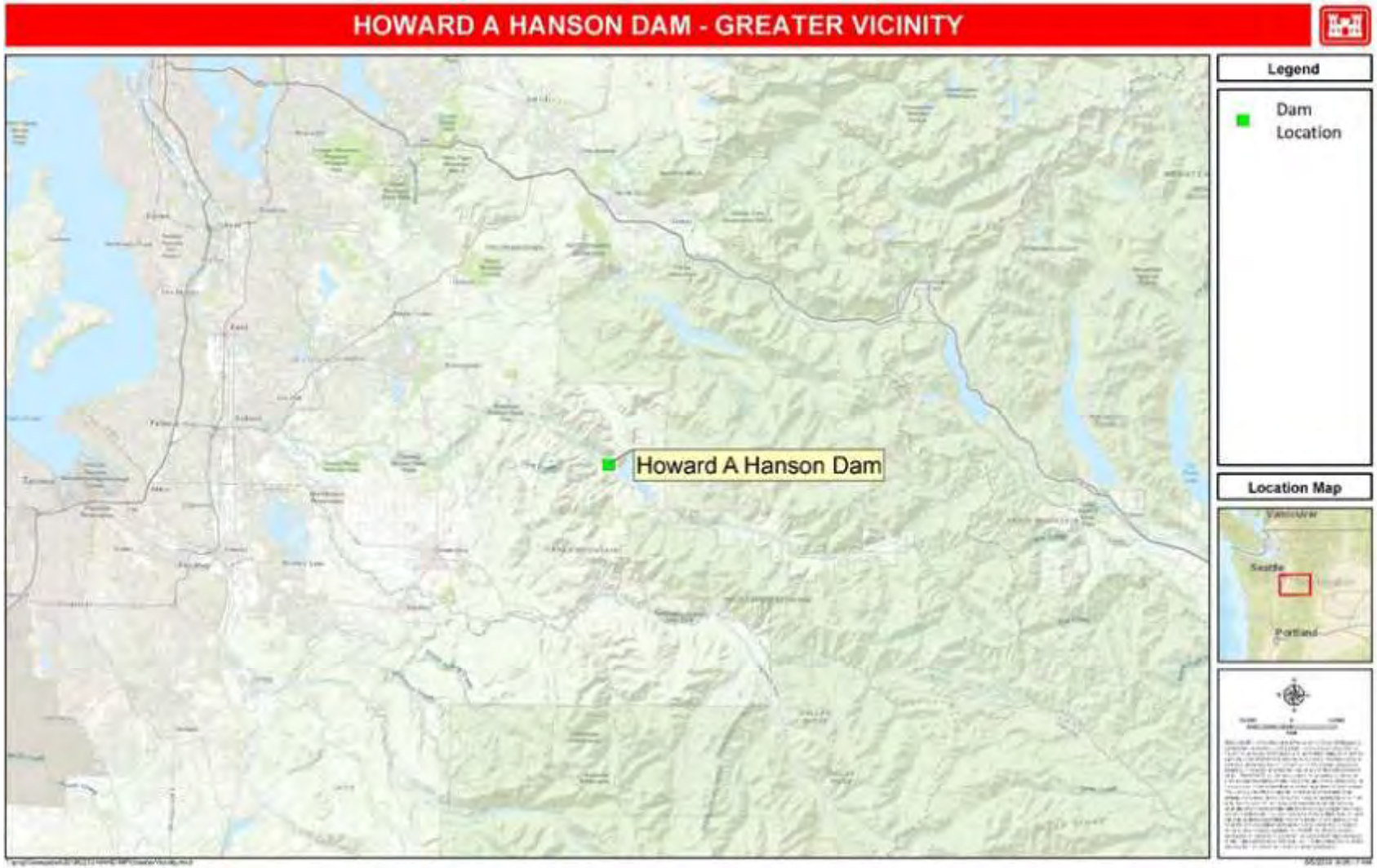

Figure 1. Howard A. Hanson Dam – Greater Vicinity.

2.2 Background and Physical Description

The HAHD, initially named the Eagle Gorge Dam (until 1958), was completed in 1962. The project was authorized to provide flood control, fish conservation, irrigation, and municipal and industrial (M&I) water supply. When HAHD was constructed, there had been no runs of anadromous fish extending above TPU's diversion dam since the latter's construction in 1912; therefore, no provisions for fish passage were built into HAHD. Since 1989 USACE has investigated the potential for the project to help meet M&I water supply needs of the Puget Sound area. In 1994, the scope of the study was expanded to include ecosystem restoration. USACE completed a Final Feasibility Study Report and Environmental Impact Statement (EIS) in 1998 and recommended a dual-purpose water supply/restoration project implemented in phases. The AWSP was authorized in WRDA 1999. Most of the components described in the 1998 EIS for the AWSP have been constructed including the new administration building and maintenance facility, upgraded seawall at the boat launch site, and the powerline upgrade to support the infrastructure. The components include significant ecosystem restoration measures including extensive river and stream habitat projects above the dam and re-establishing downstream movement of gravel and large wood below the dam. To initiate a principal part of the mitigation for the AWSP, engineering design and construction of a downstream FPF was started in 2003. Construction of the FPF completed to date includes installation of a cofferdam for building in the dry and excavation of the space for the fish collection structure, which is an area approximately 60 feet wide by 180 feet long and approximately 100 feet deep. Rock anchors, shotcrete, and drains were installed to stabilize the excavation walls. The FPF excavation and many of the surrounding features and appurtenances are shown in Figure 2. Construction of the downstream FPF was suspended in 2011 due to the anticipated Section 902 cost limit exceedance; all construction was halted, and the excavation and cofferdam have remained in place. Continuing activities on-site include monitoring to ensure excavation and critical dam structure stability. Automated instrumentation collects daily readings and manual surveys of inclinometers and slope inspections of the excavation are performed twice yearly. In 2020, federal funds were received to restart the project with the intent of achieving an operational fish passage facility by 2030.

Several construction support areas have been proposed for use by contractors during construction of the FPF. Locations of proposed construction support areas are depicted in Figure 3. Ownership of lands in the vicinity of HAHD, including the proposed construction support areas is depicted in Figure 4.

At about Milepost 3.5 on the access road to HAHD, at the "Y" in the road, there are two proposed construction support areas. The northern or upper support area has electrical utilities present at the site (in the form of a pole-mounted transformer and electrical stub-ups); no utilities are available at the southern or lower support area. Both areas at Milepost 3.5 are in USACE ownership.

At about Milepost 4.25 there are pullout and parking areas located immediately at the turnoff to the top of the dam that have been proposed for use as construction support areas. No utilities are present at these support areas. These two areas are also in USACE ownership and would not require a lease in order for a contractor to use.

At about Milepost 6.5 is a large open area under large power transmission lines. There are no utilities available at this proposed support area. This area is owned by Tacoma Public Utilities and would require a lease in order for a contractor to use.

On the south side of the river immediately downstream of HAHD there are two proposed support areas which are owned by Tacoma Public Utilities. No utilities are present at these proposed support areas.

Figure 2. Fish passage facility excavation at HAHD.

Figure 3. Howard A. Hanson Dam proposed construction support areas – highlighted in pink.

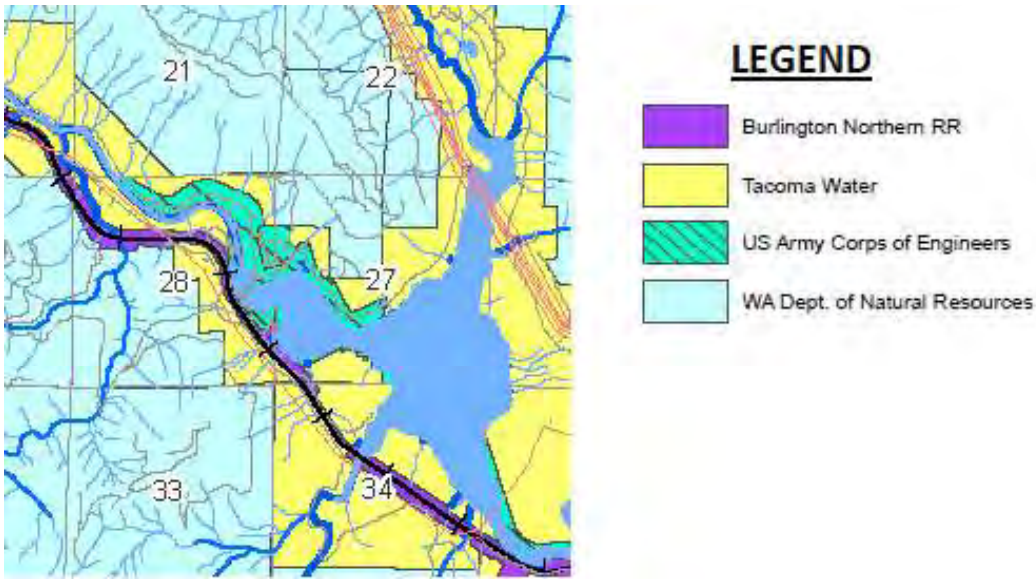

Figure 4. Property ownership at and around HAHD (adapted from TPU 2018).

2.3 Hydrology and Geology

The dam spans a narrow rock canyon located 4 miles inside the western margin of the Cascade Range. The Cascade Range in this part of Washington is largely composed of a complex assemblage of lava flows, pyroclastic deposits, and fluvial sedimentary deposits, with lesser amounts of intrusive igneous rocks. These rocks, most of which were deposited during the upper Eocene to Miocene (10 to 40 million years ago), were uplifted in Pliocene time (5 million years ago) to form the Cascade Range. This uplift was accompanied by Pliocene and Pleistocene (1 million years ago) volcanism that formed the major Cascade volcanoes such as Mt. Rainier and Mt. St. Helens. The project site is underlain by bedrock composed of a series of Tertiary age volcanic rocks, locally known as Eagle Gorge andesite and regionally correlating with the Ohanapecosh Formation of early Miocene age (USGS 2000).

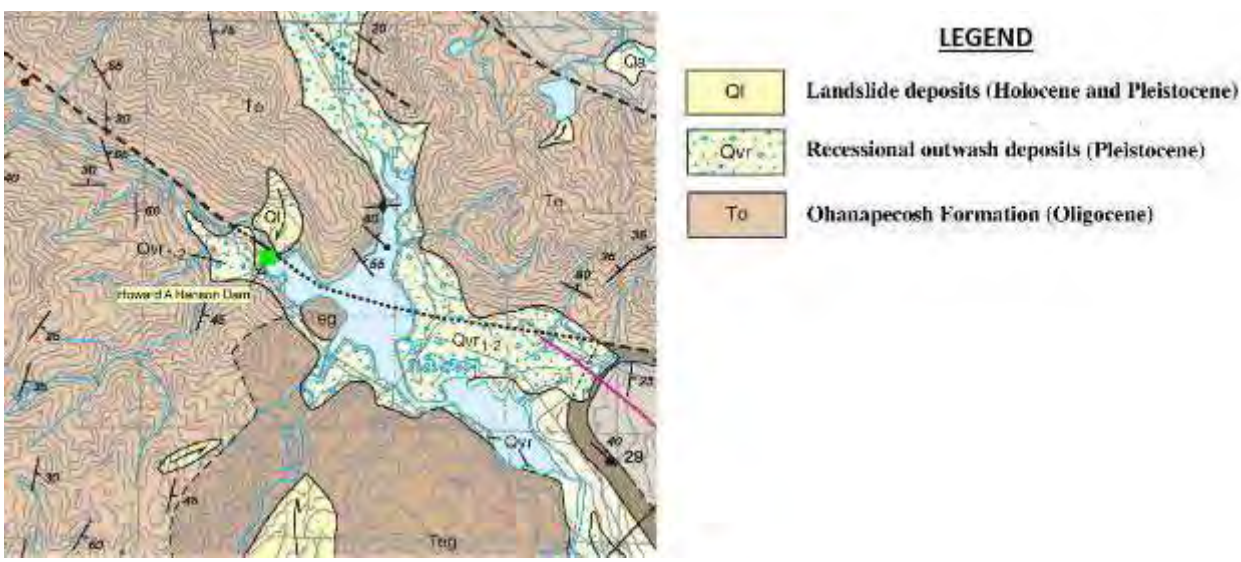

During the Pleistocene, the Puget Lobe of the Fraser continental glacial ice sheet extended south into Puget Sound. Portions of this ice sheet extended east into the valleys along the west slope of the Cascade Range. Within the North Fork of the Green River valley, the ice and associated glacial deposits (moraine and glaciolacustrine) diverted the proto-Green River from the North Fork valley drainage to the southwest, into its present course, where it emerges from the Cascade Mountain front south of the North Fork valley. The diverted river flowed on a bedrock surface at approximate elevation 1,000-feet in the vicinity of the dam site. This ancestral channel is buried under fluvial, glacial, lacustrine, and rockslide deposits that make up the right abutment of HAHD. Interbedded fluvial and glacial outwash deposits overlie bedrock at the center of the ancestral valley and suggest a history of erosion and deposition common to these environments. Lacustrine deposits, which overlie the fluvial and glacial outwash sediments, were deposited during glacial period(s) when ice and debris dammed the Green River and created glacial lake(s). Figure 5 shows the location of the ancestral and pre-dam river channels with respect to the proposed FPF at HAHD.

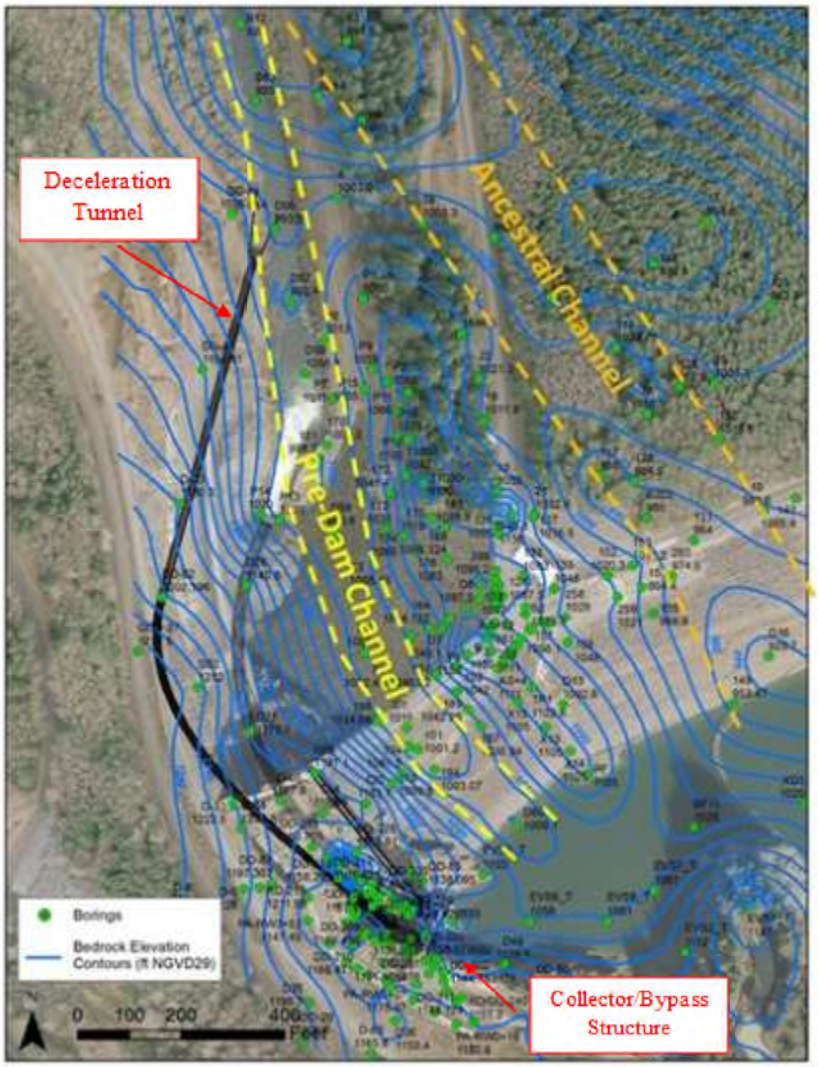

Figure 6. Bedrock contour map showing historical river channels (in yellow and orange) and proposed FPF (in black).

The U.S. Department of Agriculture (USDA) Natural Resource Conservation Service (NRCS) has classified the soils at the proposed construction support areas into three different series or soil types (NRCS 2021).

Kanaskat Series. The Kanaskat series, found at the proposed construction support sites near Milepost 3.5 and Milepost 4.25, is made up of well drained soils composed of gravelly sandy loam with moderate infiltration rates. These are deep and moderately deep, moderately well to well drained soils with moderately coarse textures. Kanaskat series soils formed in weathered volcanic ash, colluvium, and residuum from extrusive igneous rocks with a mantle of volcanic ash. Kanaskat soils are found on foothill backslopes at elevations of 1,000 to 1,700 feet at locations with slopes from 0 to 65 percent.

Winston Series. The Winston series, found at the proposed construction support area at Milepost 6.5, is made up of very deep, well drained loam soils that formed in glacial outwash, or old alluvium, with a mantle of loess and volcanic ash. Winston soils are on terraces and terrace escarpments and have slopes of 0 to 65 percent and are found at elevations from 150 to 1,900 feet.

Nargar Series. The Nargar series, found at the proposed construction support sites on the south side of the river downstream of HAHD, is made up of well drained soils with moderate infiltration rates. These are deep, well drained soils formed in volcanic ash and glacial outwash or alluvium. They are on terraces on slopes ranging from flat to very steep. The soil texture is fine sands to loamy, gravelly coarse sand with depth.

2.4 Regional Climate

The climate of the Green River Watershed is wet with temperatures ranging from temperate to cold (TPU 2018). Temperatures in the Green River Watershed are generally mild. At the eastern end of the watershed (i.e. at Stampede Pass), the January average minimum and maximum temperatures are 21 and 29.1 degrees Fahrenheit, respectively, while August average temperatures range from a low of 47.9 degrees Fahrenheit to a high of 65.2. At the western end of the watershed (i.e. at weather station Palmer 3 ESE), the January average minimum and maximum temperatures are 31.6 and 42.4 degrees Fahrenheit respectively and August average temperatures are 51.2 and 74.3 degrees Fahrenheit. Much of the precipitation in the Green River Watershed falls in the form of snow during winter months, especially at higher elevations. Precipitation recorded at the Palmer 3 ESE weather station averages 90.2 inches of rainfall and 36.8 inches of snowfall annually (TPU 2018). The amount of rainfall at Stampede Pass is similar to that in the western end of the watershed, with 87.7 inches per year on average; but the amount of snowfall there is much greater at 439.3 inches per year on average (TPU 2018).

2.5 Water Quality

The HAHD and the proposed FPF construction support areas are located in the Green River watershed which is the primary drinking water source for the City of Tacoma (TPU 2018). Water quality (for surface water and groundwater) in the watershed is carefully monitored and managed to maintain sustainable use of the water resource for the municipal water supply. Weekly or bi-weekly surface water samples are collected and analyzed for water quality by TPU at 10 locations throughout the Green River watershed (Figure 7). Water Quality monitoring stations closest to the proposed construction support areas include stations at the North Fork Green River (WQ Station #1) and at Bear Creek at Weyerhaeuser

Road (WQ Station #11). Monthly water quality samples to characterize reservoir water impounded by HAHD are collected and analyzed by TPU during periods when the reservoir is full (usually May through October).

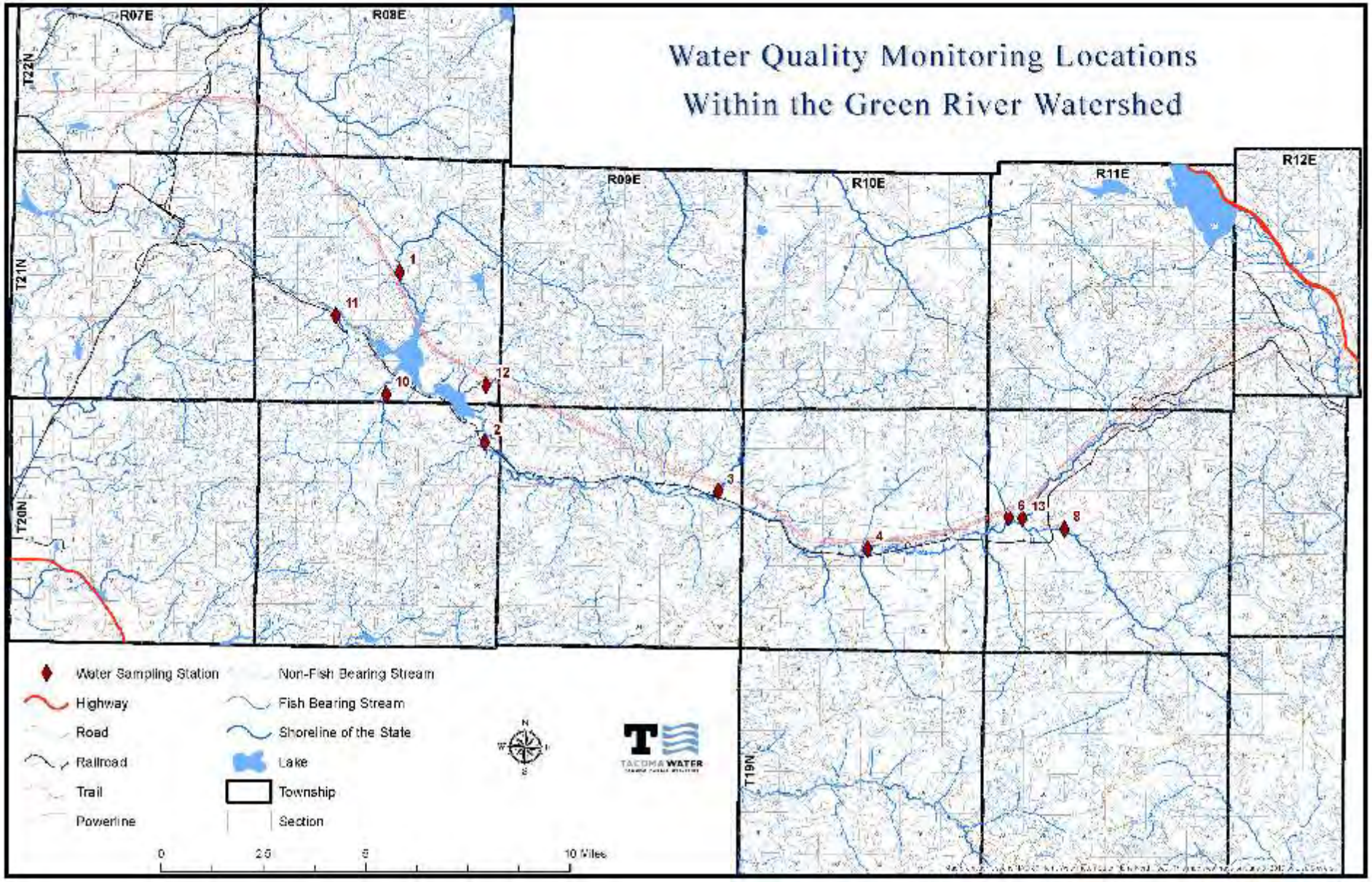

Figure 7. TPU Green River Watershed Water Quality Monitoring Stations (TPU 2018)

Figure 8 Locations of TPU Headworks and North Fork Wellfield in relation to HAHD and proposed construction support areas

Figure 9 Clean Water Act assessed and listed waters in the vicinity of HAHD (adapted from WADOE 2021a).

TPU has secured agreements with landowners and management agencies to follow best management practices and to prevent releases of hazardous materials to protect water quality in the watershed. TPU manages and restricts visitor access to the watershed by staffing guarded access gates. TPU also monitors many of these activities in the Green River watersheds by inspection of scheduled activities and patrols of the watershed to prevent unauthorize use or access. Activities that can influence water quality in the Green River watershed include: logging, road building and maintenance, recreation, on-site wastewater treatment systems, road and rail transportation, powerline corridor maintenance, and wildland fire fighting.

Logging and road building/maintenance and use can cause increased erosion and result in release of contaminants and increased turbidity in surface water. Levels of turbidity and suspended solids in the Green River track closely with rainfall patterns (TPU 2018). To minimize turbidity, TPU practices a no net increase policy for develop road mileage within the forest management zone of the watershed. Additionally, watershed inspections by TPU to monitor logging sites and watershed roads for compliance with Forest Practices Applications and to flag areas of developing erosion or failing culverts and drainage features.

Recreation in the Green River watershed is restricted, and recreational access is prohibited entirely for certain critical areas of the watershed. Dispersed recreation within the watershed may include snowmobiling, skiing, hiking, backpacking, fishing, hunting, and other activities in accordance with the memorandum of agreement between TPU and the United States Forest Service. There are no developed recreation facilities or campgrounds within the watershed. The most prevalent forms of recreational access include snowmobiling in the far eastern portion of the watershed and hunting by special permits administered by the Washington Department of Natural Resources and a separate hunt administered by the Muckleshoot Tribe of Indians.

On-site wastewater systems have been identified by the Washington State Department of Health as having high potential for adversely affecting watershed water quality. The most significant of these within the watershed are septic systems installed at HAHD. The HAHD septic systems are regularly inspected and maintained, and the associated underground septic tanks are pump annually. Other temporary worksites (such as at logging or construction sites) are required to provide portable toilets as needed to protect water quality.

There are approximately 132 miles of graveled forest roads and 30.5 miles of railroad lines within the Green River watershed. Contaminants that are released from road transportation can include petroleum products, metals such as cadmium and lead, and silt and sediment from land erosion. Uncontrolled releases from train derailments could also adversely affect source water quality in the watershed.

Conditions resulting from wildland fires and firefighting efforts may pose water quality risks in the watershed related to increased runoff velocities, sediment transport, organic matter and chemical fire suppressants. Wildland fire fighting activities in the Green River watershed are coordinated by the Washington State Department of Natural Resources and the U.S. Forest Service. The most recent large wildfire to occur in the watershed was the Sawmill Creek Fire that began in September 2017 and covered over 1,000 acres southeast of Lester (TPU 2018). Wildfire in the Green River watershed is very infrequent and no other recorded wildfires have occurred in the past 10 years (NIFC 2021).

The application of herbicides, pesticides, insecticides, and fertilizers could adversely affect water quality in the watershed. Herbicides are used on a limited basis for management of forest lands and to control vegetation along roadways (TPU 2018). Herbicides are also used in conjunction with mechanical brush clearing for vegetation control along powerline corridors. Fertilizers are used on occasion by landowners. Historically, insecticides and pesticides have not seen significant use in the Green River Watershed (TPU 2018). No chemicals are applied at the North Fork Wellfield or in buffer zones. Watershed Rules and DNR Forest Practices Rules govern the application of these chemicals in the Green River watershed. TPU staff members routinely collect samples for chemical analysis prior to, immediately after and during the next rain event following chemical applications.

The proposed construction support areas are adjacent to waters listed per section 303(d) of the Clean Water Act as impaired or polluted. Figure 9 and Table 1 summarize listed or assessed waters of the Green River watershed in the vicinity of HAHD. The closest listed impaired waterbody to the proposed construction support sites is the reach of the Green River immediately below HAHD (Listing ID 7483). This reach of the Green River is listed under section 303(d) for the criteria of excess temperature and has an established Total Maximum Daily Load plan (WADOE 2011).

Table 1. Clean Water Act assessed and listed waters near HAHD

Waterbody Name/ Assessment Unit ID	Category	Parameter	Listing ID
Green River/ 17110013000042	5	Dissolved Oxygen	48004
Green River/ 17110013000042	4A	Temperature	7482
Green River/ 17110013000047	4A	Temperature	7483
Green River/ 17110013000047	2	Toxaphene	8660
Gale Creek/ 17110013000232	5	Temperature	7476
Un-named creek (tributary to Charley Creek)/ 17110013000313	5	Temperature	72613
Smay Creek/ 17110013000308	5	Temperature	6873
Un-named creek (tributary to Smay Creek)/ 17110013000295	5	Temperature	72612
Green River/ 17110013000065	4C	Habitat/Large Woody Debris	6223

Note: Category 5 waters are listed per section 303(d) of the Clean Water Act as impaired or polluted and which require a water improvement project such as a Total Maximum Daily Load (TMDL) plan. Category 4A waters are impaired and have TMDL plan currently implemented. Category 4C waters are impaired by causes that cannot be addressed through a TMDL plan. Category 2 are waters of concern that are not polluted enough to warrant development of a TMDL.

There are numerous wells within 1 mile of HAHD (Figure 10). The majority of these wells are not used for drinking water; rather they are geotechnical borings and monitoring wells which are used for purposes of managing, planning, and monitoring subsurface and groundwater conditions around HAHD to ensure

the safety and operability of the dam. The closest drinking water production well is a small well located behind the HAHD new administration building which supplies potable water to the administration building and the maintenance building. The most significant drinking water production facility within the 1-mile search radius is TPU's North Fork Wellfield. This large network of drinking water production wells is located along the west bank of the North Fork of the Green River, approximately 2.5 miles upstream of HAHD (Figure 8). The North Fork Wellfield is located approximately ½ mile upstream of and north of the proposed construction support area at Milepost 6.5. The wellfield, developed in 1975, currently consists of seven high-capacity drinking water production wells spaced approximately 250 to 300 feet apart. The North Fork wells draw water from a highly permeable aquifer at depths ranging from 65 to 118 feet (TPU 2018). The aquifer has a significant hydraulic interconnection with the North Fork Green River at the wellfield. The speed and direction of groundwater flow in the vicinity of the North Fork Wellfield is likely variable and is probably heavily influenced by the seasonal filling and draining of the HAHD reservoir and by the operation of the production wells in the North Fork Wellfield. Under favorable aquifer recharge conditions, the North Fork Wellfield can sustain a maximum pumping rate of 60 to 72 million gallons per day for approximately one week, and likely can sustain a continuous pumping rate of 24 million gallons per day under most recharge conditions. The wellfield was constructed originally to ensure compliance with turbidity requirements required under drinking water supply and treatment regulations. Since the construction of a filtration facility at TPU's Green River headworks in 2015, the North Fork Wellfield supply is now blended with the direct Green River surface water supply to increase operational efficiencies in the management of turbidity in the drinking water treatment process (TPU 2018).

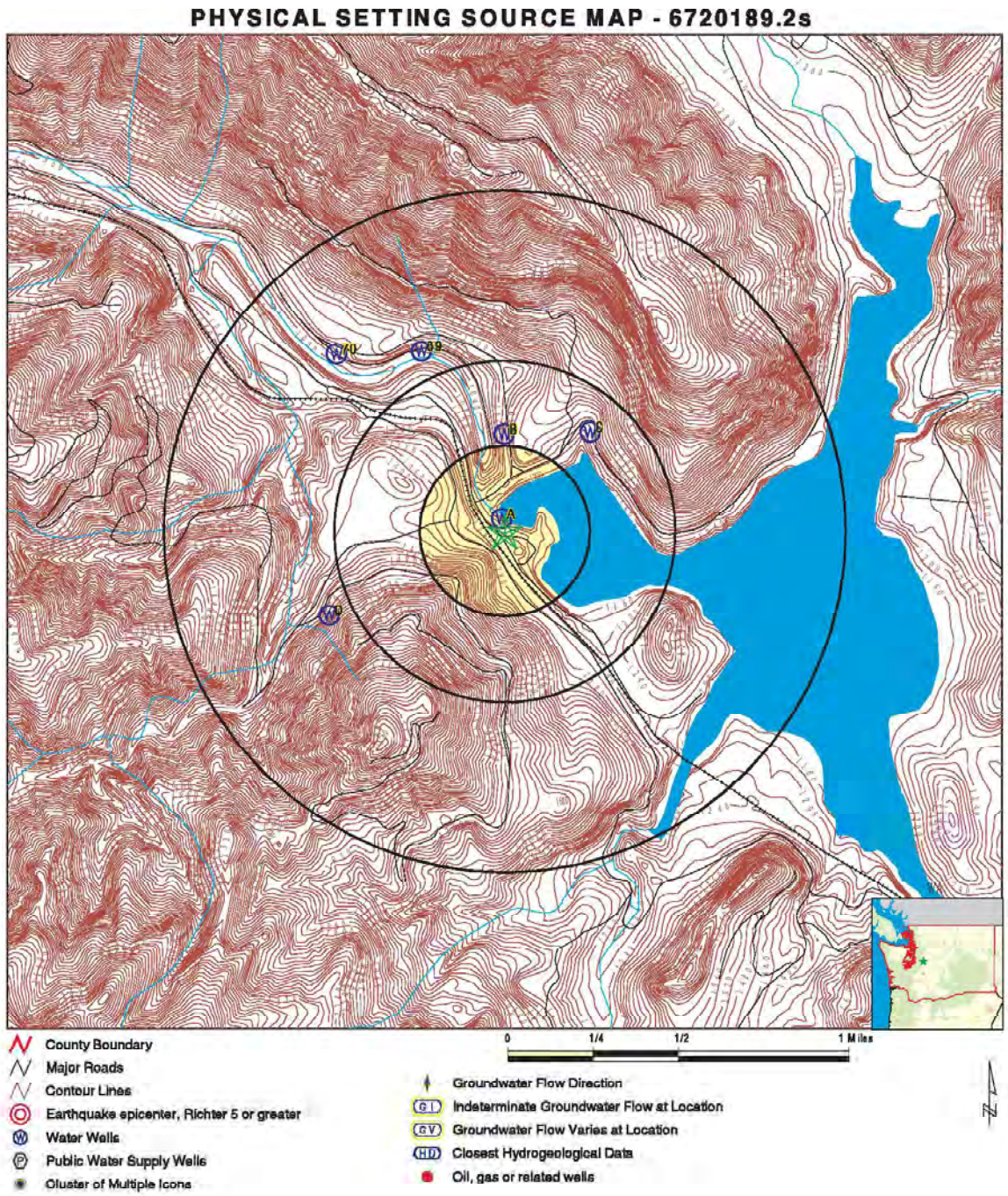

Figure 10. EDR map of water wells within 1 mile of HAHD.

3. Site History

The history of land use at and surrounding the proposed construction support sites was reviewed to identify past uses with the potential to adversely affect environmental conditions. Historical records reviewed include aerial photographs from 1957 to 2021, topographic maps from 1913 to 2014, and

selected HAHD as-built drawings as a means to determine Site history.

3.1 Site and Adjacent Property History

The 1913 topographic map shows a railway line is established through the Green River valley with small settlements of Lemolo, Eagle Gorge, and Page. The primary railway line is routed differently than the present railway alignment. Much of the historic railroad is routed in what is now the inundated area of the HAHD reservoir, with the rail line crossing to the north shore of the Green River near the site of present-day HAHD. A spur rail line is shown going up the North Fork Green River valley from Eagle Gorge toward Page. HAHD had not yet been constructed and the historic site of Eagle Gorge is shown in the now inundated area of the present day HAHD reservoir. The historic site of Page is located north of the Mile Post 6.5 construction support area and near the present-day location of the North Fork Wellfield. The historic site of Lemolo is near the present-day Mile Post 3.5 construction support areas. No powerline corridors are depicted on the 1913 topographic map.

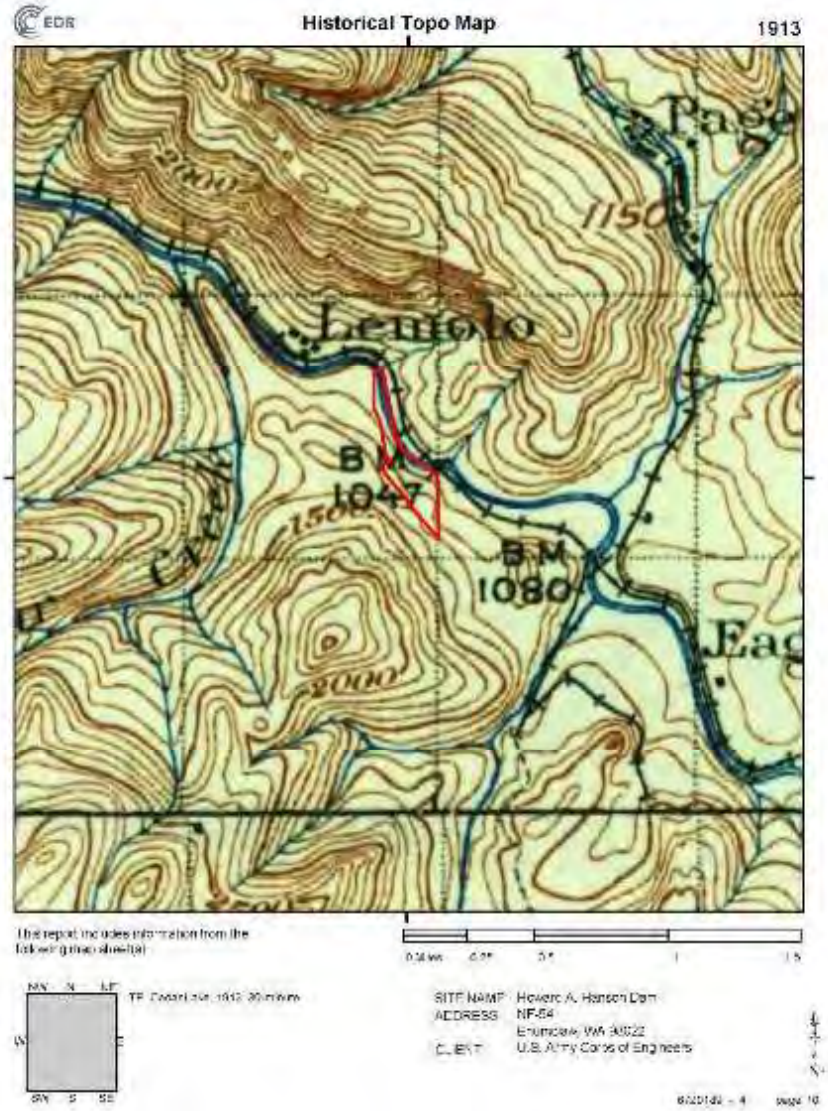

Figure 11. 1913 historical topographic map. The site of present-day HAHD is outlined in red.

An aerial photograph from 1952 shows the main railroad line still routed on its original alignment. The spur rail line in the North Fork Green River valley is no longer present. Buildings and structures associated with the historic settlements of Page, Eagle Gorge, and Lemolo are either not present or not visible in the aerial photo. Two powerline corridors appear (one north and one south of the river). Recent clear-cut logging of forest has occurred south of the present-day site of HAHD at T21N, R08E, sections 29 and 33 and at T20N, R08E, section 2 and 3. Slightly older clear cuts appear in T21N, R08E, section 32. The construction support sites at Mile Post 3.5 and at the present day HAHD are developed as a railway grade surrounded by undeveloped forest. Construction support sites south of the Green River are undeveloped and are forested. The construction support site at Mile Post 6.5 is undeveloped and vegetated with forest trees.

Figure 12. 1952 historical aerial photograph. The site of present-day HAHD is circled in red.

The historical topographic map from 1953 shows the primary railway follows largely the same alignment as shown in the 1913 topo and the 1952 aerial photo. The settlement of Page and the spur railway in the North Fork Green River Valley is no longer shown. A network of logging railroads are depicted on the hills south of the Green River and south and west of the present day location of HAHD. A surface water feature called Page Mill Pond is shown near the historic location of Page and near the present-day location of the North Fork Wellfield. Powerline corridors, including the powerline corridor at the present-day location of the Mile Post 6.5 construction support site, are shown following the same alignment as in the 1952 aerial photo.

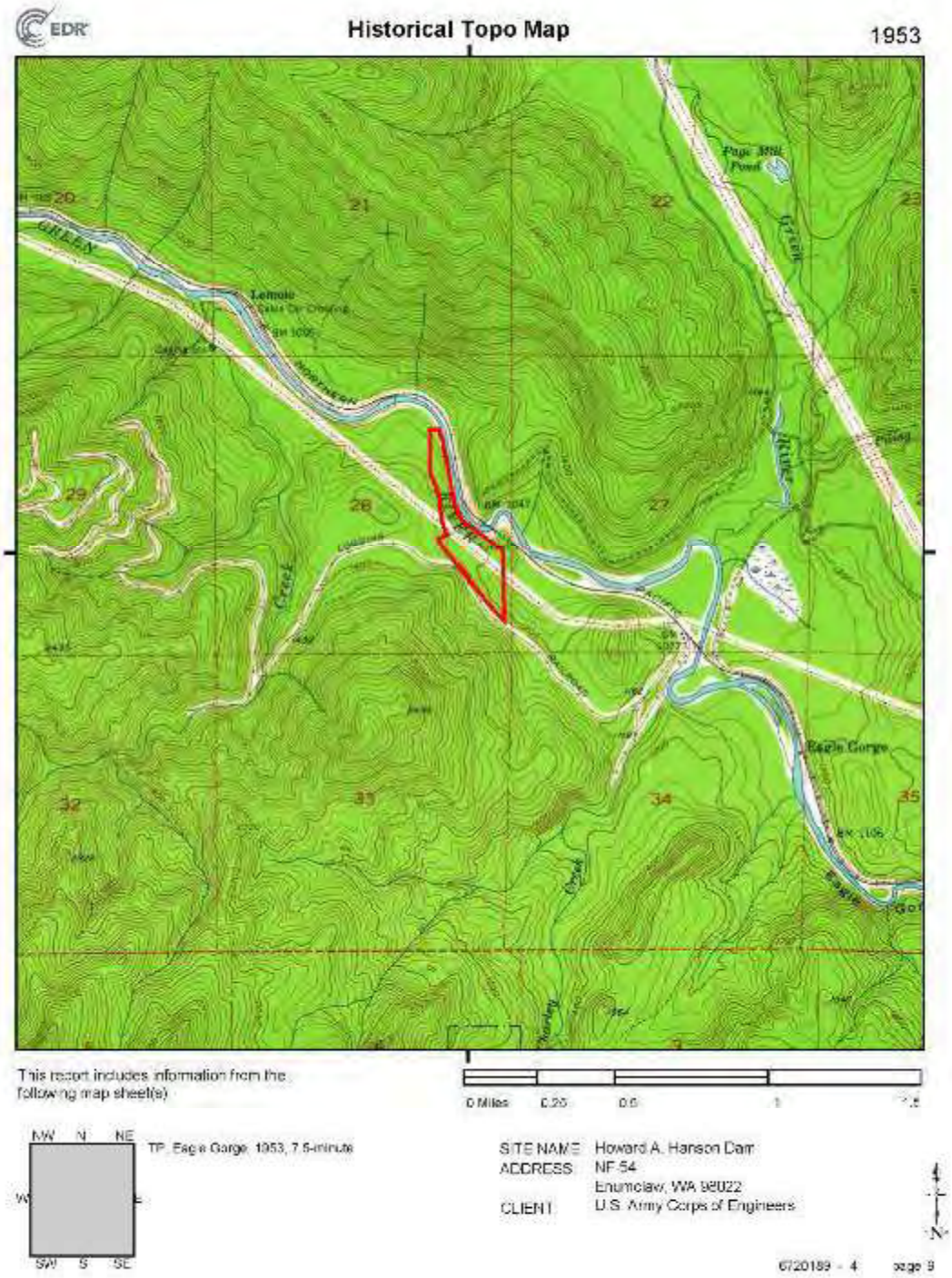

Figure 13. 1953 historical topographic map. The site of present-day HAHD is outlined in red.

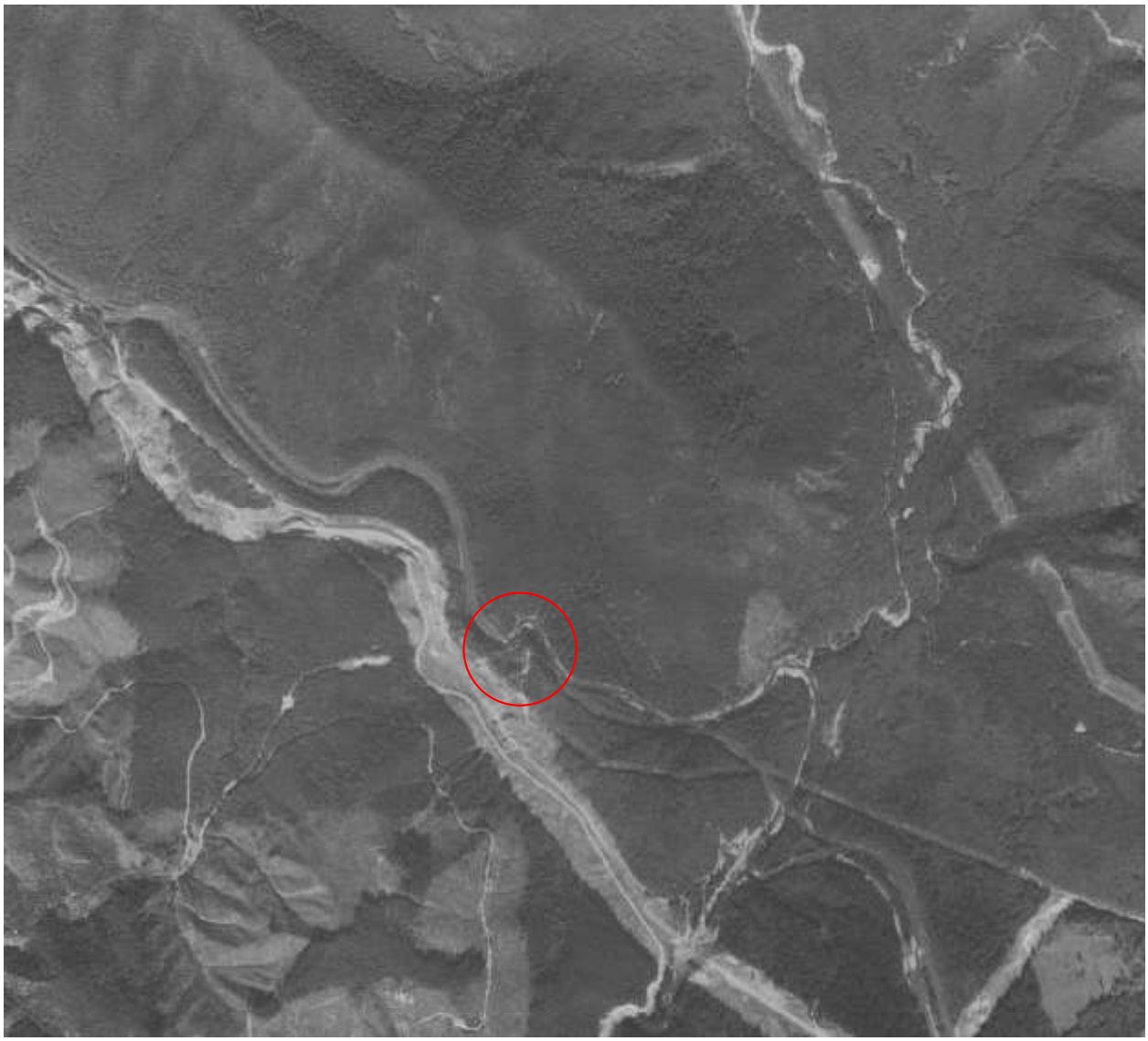

Figure 14. 1957 historical aerial photograph. The site of present-day HAHD is circled in red.

An aerial photograph from 1957 shows apparent construction in progress to re-align the railroad along the southern shore of the Green River. This was to support the imminent construction of the HAHD and subsequent inundation of the area immediately behind the dam, including significant portions of the historical rail line. Areas comprising the proposed construction support areas south of the Green River downstream of the present-day dam are not disturbed and appear to be forested. New land disturbance is apparent at the Milepost 6.5 site that was not present in the 1952 aerial photo. The appearance and configuration of the area is otherwise similar to that apparent in the 1952 aerial.

The topographic map and aerial photo from 1968 show the HAHD that had been recently constructed. The railway has been realigned to its present-day location along the south shore of the Green River. In place of the former railway on the northern shore, the access road to HAHD has been constructed. Power corridors appear to be expanded compared to 1953. Areas comprising the south shore proposed construction support areas appear to have been cleared of vegetation. The area comprising the upper construction support site at Milepost 3.5 has also been cleared of vegetation. The construction support

sites at Milepost 4.25 appear as they do today (i.e. narrow strips of cleared land along the side of the HAHD access road). The northern powerline corridor has been expanded and the proposed support site at Milepost 6.5 appears similar to its present-day appearance: leveled ground underneath large powerlines.

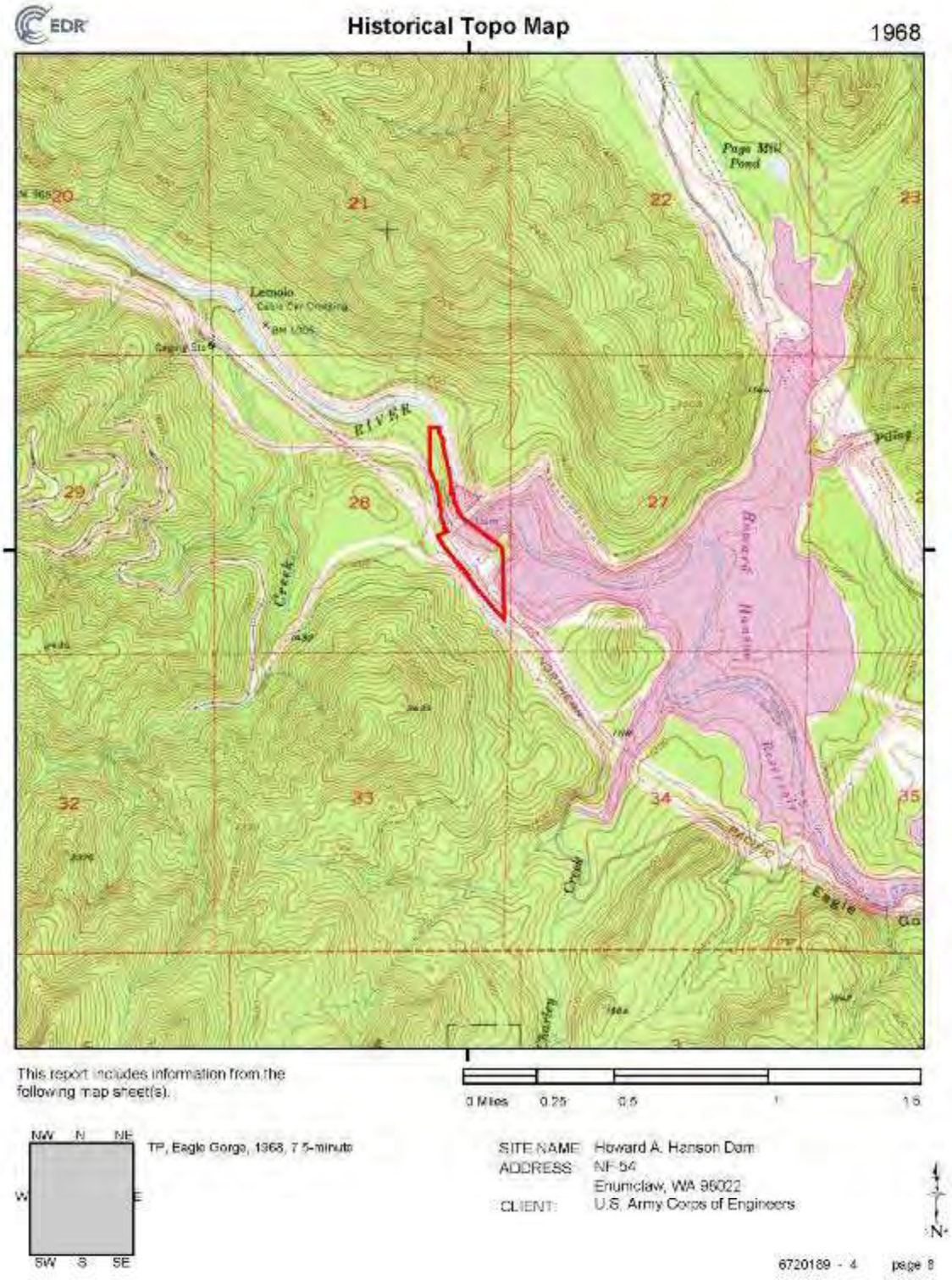

Figure 15. 1968 historical topographic map. The site of HAHD is outlined in red.

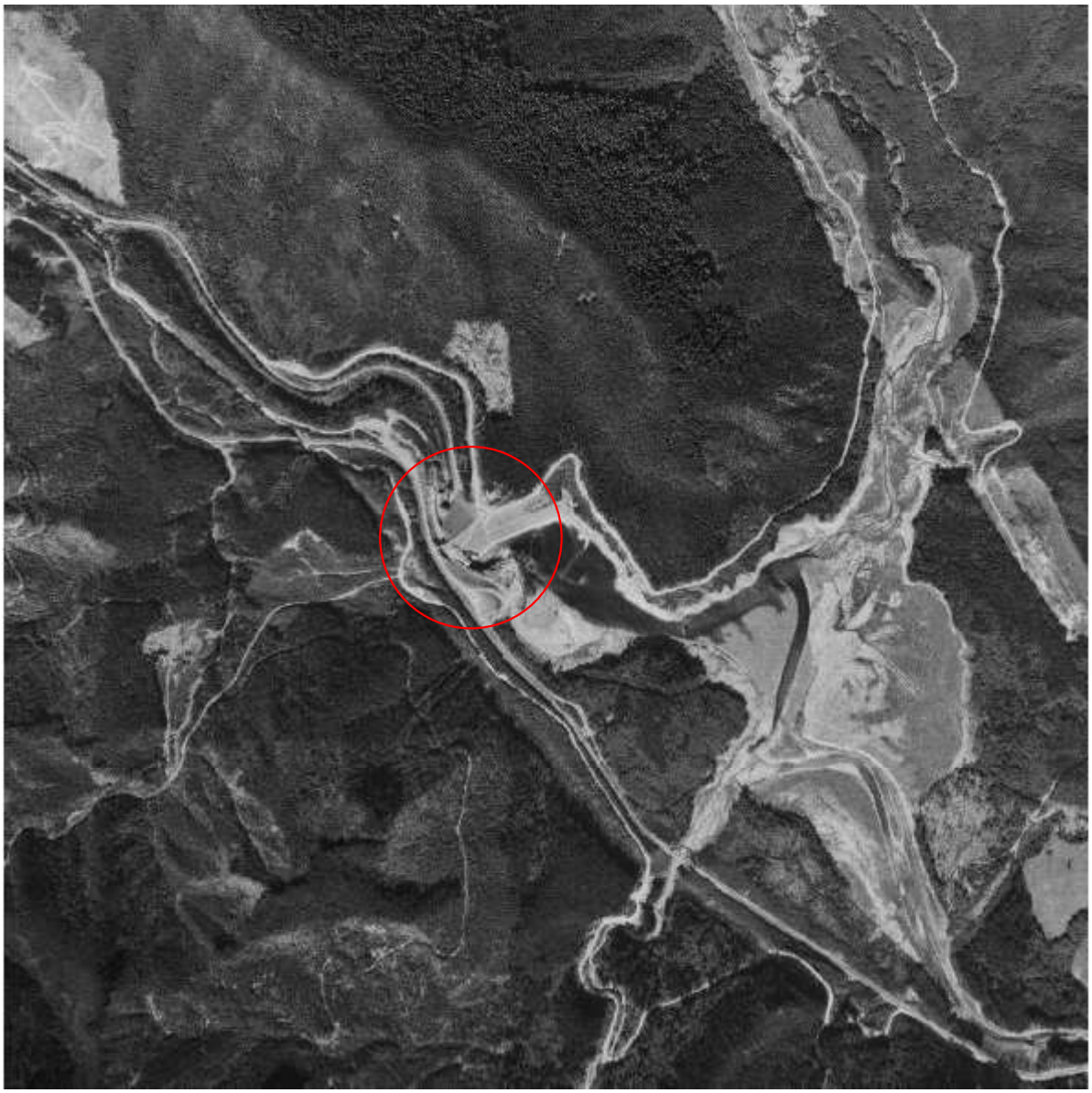

Figure 16. 1968 historical aerial photograph. HAHD is circled in red.

Figure 17. 1979 historical aerial photograph. HAHD is circled in red.

The aerial photograph from 1979 show that the proposed construction support sites appear largely similar to how they appeared in 1968. There is visible land disturbance at the Milepost 6.5 site. By 1979, large areas of timber have been clear-cut from the hillside and ridge immediately north of HAHD, but this logging actively does not appear to have affected the use or appearance of the proposed construction support sites.

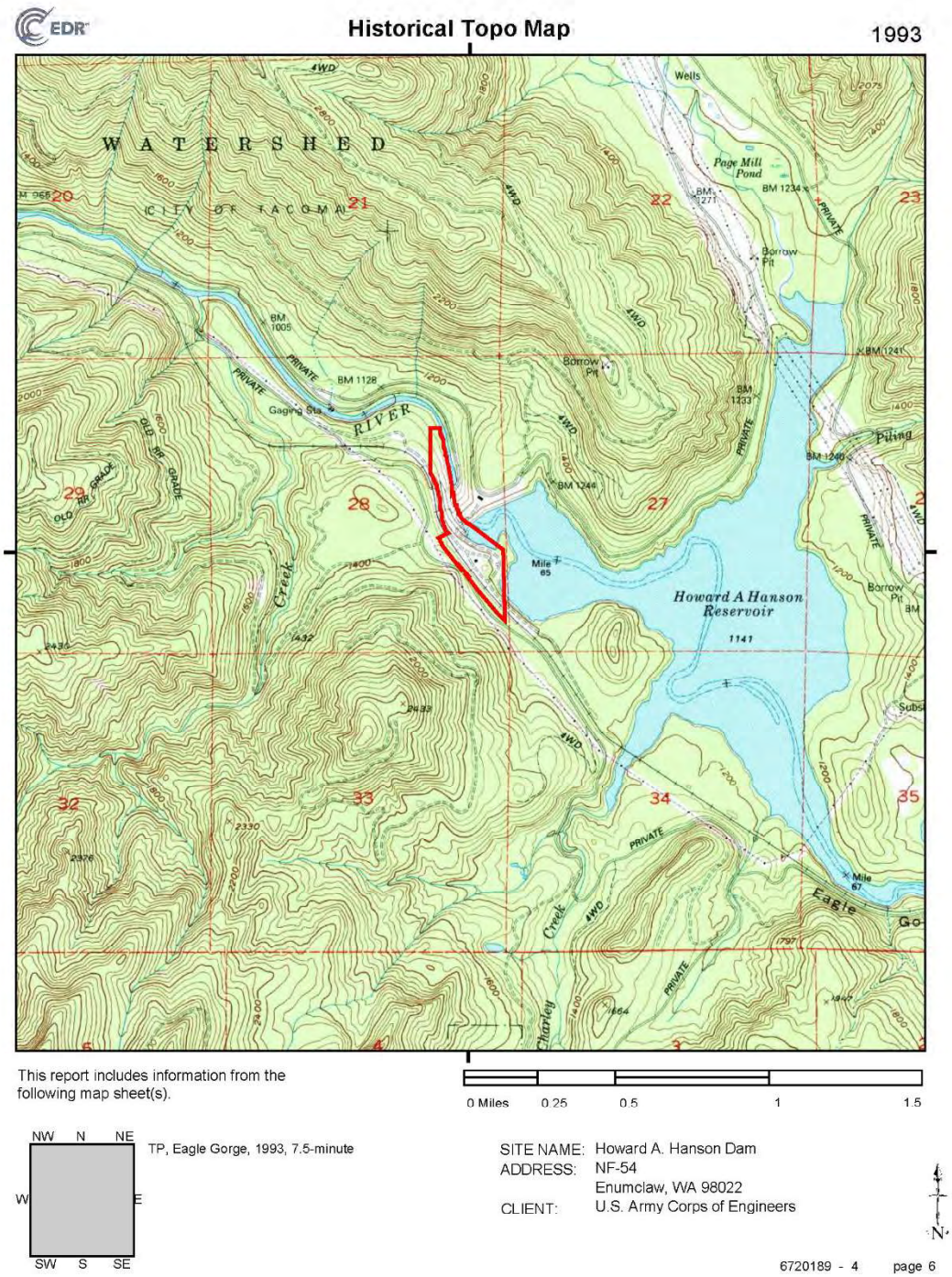

Figure 18. 1993 historical topographic map. The site of HAHD is outlined in red.

There are few apparent changes on the 1993 topographic map as compared to the 1979 aerial photo. Structures comprising the North Fork Wellfield pumps and wellhouses appear on the map and are identified as "Wells". The area at the proposed Mile Post 6.5 construction support site is labeled as a borrow pit. Railway, access road, and power corridor alignments appear similar to the 1979 aerial photo.

Figure 19. 1998 historical aerial photograph. HAHD is circled in red.

The construction support sites and surrounding lands in 1998 appear similar to that depicted in the 1979 aerial photo. Some of the proposed construction support sites on the south side of the river appear somewhat overgrown by this time. Land disturbance at the Milepost 6.5 site is visible in the 1998 aerial photo.

Figure 20 depicts the 2003 as-built drawings showing storage, stockpiling, and disposal sites used during construction of the HAHD FPF excavation and cofferdam. The disposal site referred to (at the proposed Milepost 6.5 construction support site) is for land deposition of excavated soil and sediments. The proposed construction support sites south of the river were used for temporary stockpiling and storage of materials.

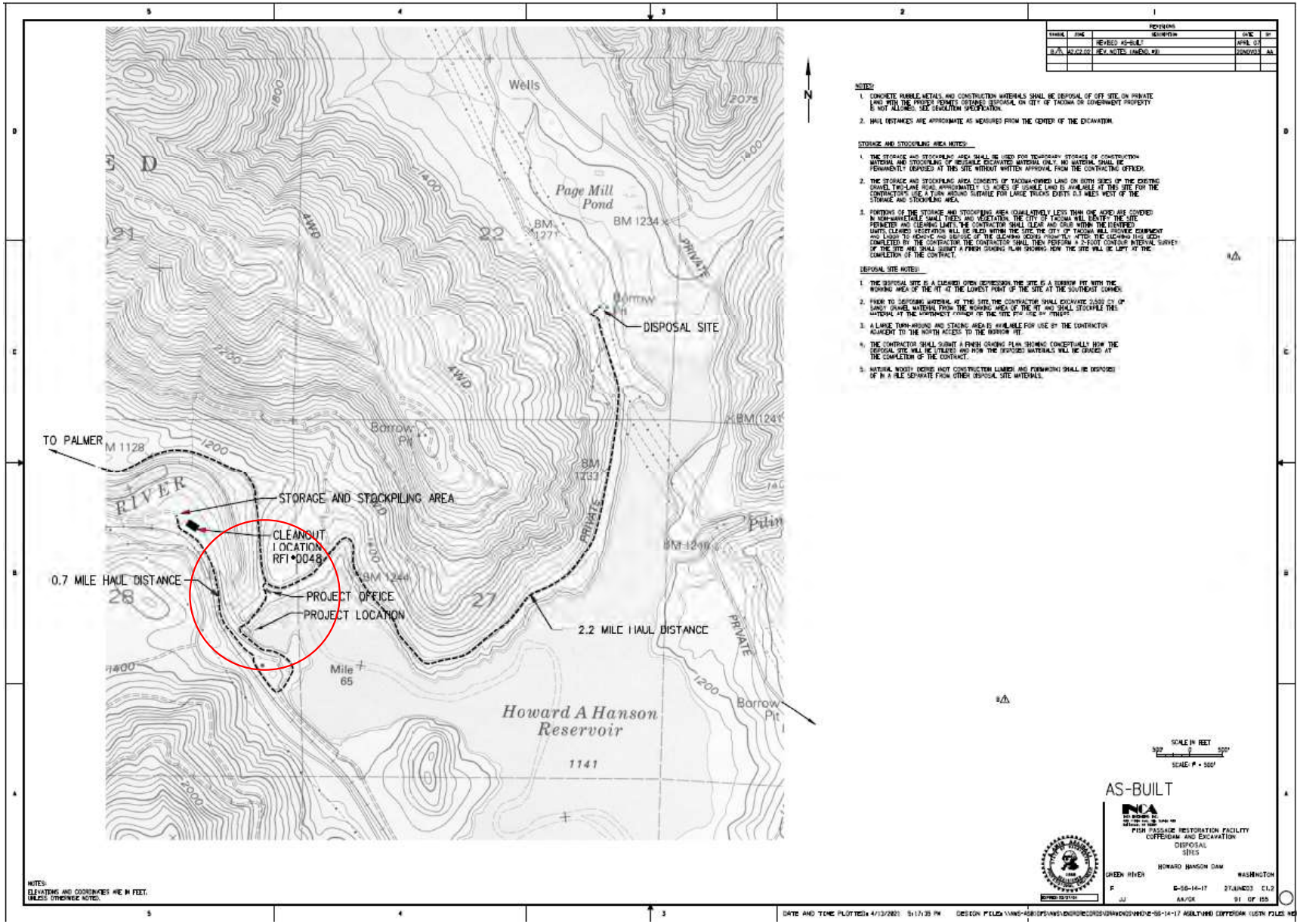

Figure 20. 2003 historical as-built drawing showing storage, stockpiling, and disposal sites. The disposal site referred to is for land deposition of excavated soil and sediments generated during construction of the FPF excavation and cofferdam. HAHD is circled in red.

Figure 21. 2006 historical aerial photograph.

In the 2006 aerial photo, the FPF excavation and cofferdam construction is visible at HAHD near the existing intake tower. The upper site at Milepost 3.5 proposed construction support sites has been cleared recently and construction support trailers are present. One of the construction support sites on the south side of the river has also been recently cleared and another construction trailer appears in this location also. Site at Milepost 6.5 shows additional clearing as compared to prior year aerial photos. Construction trailers are present at the Milepost 6.5 sites and apparent placement of soil has occurred on the northern end of the site.

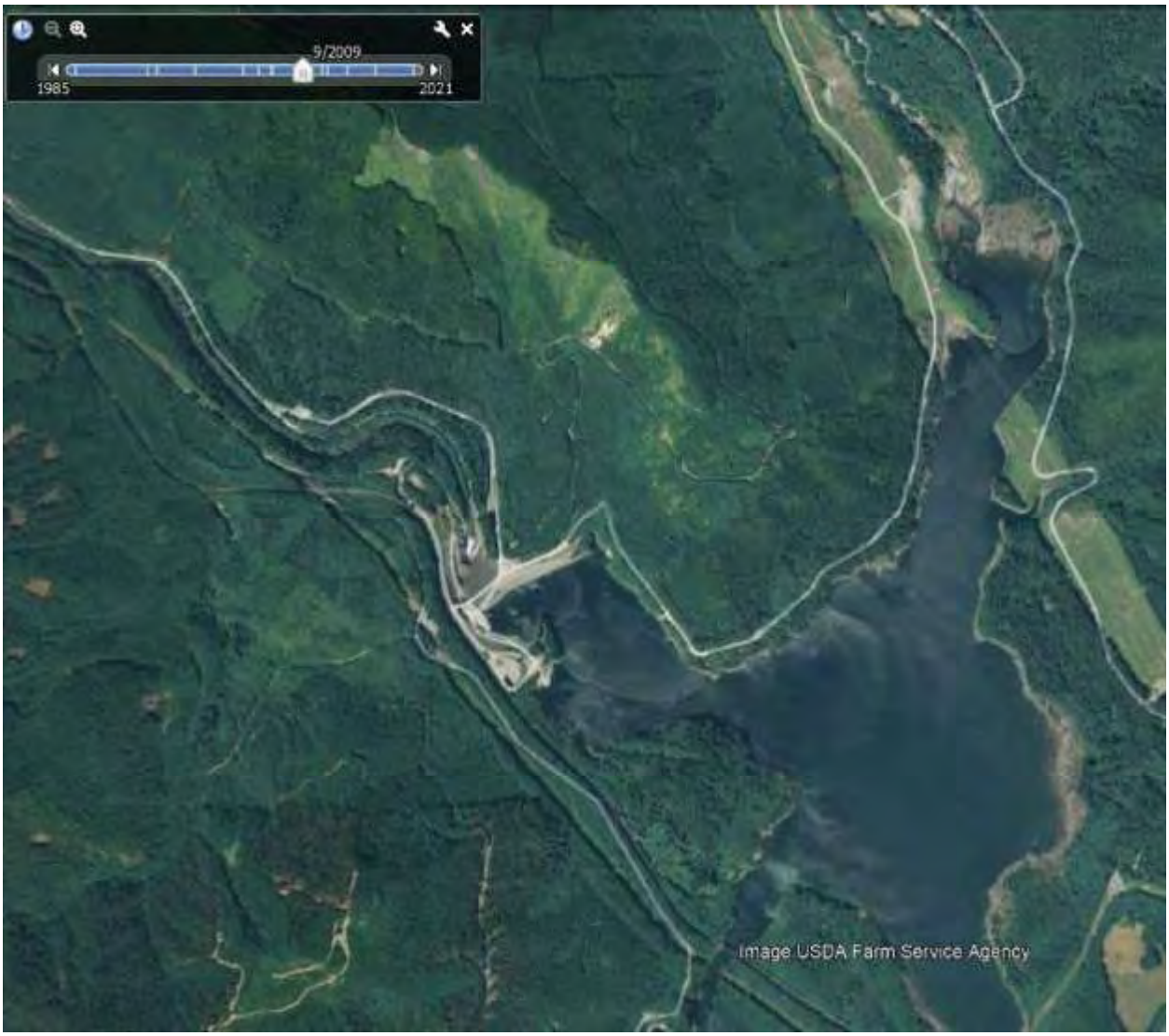

Figure 22. 2009 historical aerial photograph.

By 2009, construction support trailers are present at the upper and lower proposed construction support sites at Milepost 3.5. Construction support trailers also appear in two of the sites on the south side of the river. The Milepost 6.5 site appears to be vacant.

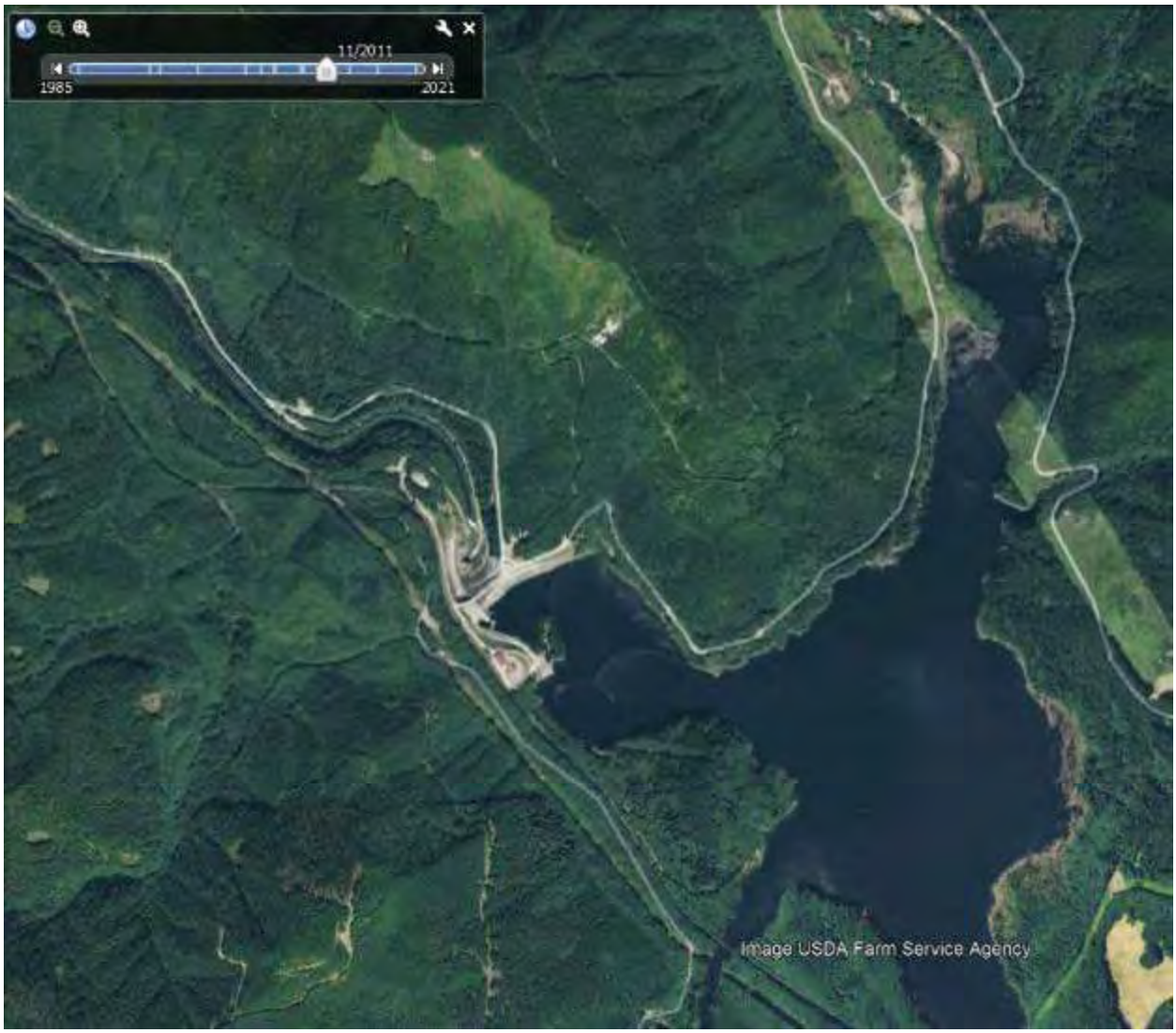

Figure 23. 2011 historical aerial photograph.

By 2011 at HAHD, one building had been expanded (the warehouse) and a new building had been constructed (new administration building). Additional placement or disturbance of soil at the Milepost 6.5 site as compared to the 2009 aerial photo is apparent.

Figure 24. 2017 historical aerial photograph.

Construction trailers have been removed from all the proposed construction support sites by July 2017. There is apparent additional placement or disturbance of additional soil at the Milepost 6.5 site by this time as compared to prior year aerial photos.

Figure 25. 2021 historical aerial photograph.

The 2021 aerial photograph depicts the present configuration and condition of the proposed construction support sites and areas at and around HAHD. No construction support trailers are present, and no additional soil placement or disturbance as compared to the 2017 aerial photo is apparent.

3.2 Past Uses, Operations, and Maintenance

Based on review and analysis of historical topographic maps and aerial photos as well as HAHD project as-built drawings, none of the proposed construction support sites have ever had permanent structures built on them. Several of the sites have been used for construction support in the past, including for placement of construction job trailers, material stockpiling and storage, and for excess soil and sediment disposal.

The proposed construction support sites at Milepost 3.5 and 4.25 are very close to the location of the historical alignment of the first railroad line in the Green River valley and portions of these sites may have been first cleared and developed during construction of those original rail lines in the 1880's. The Milepost 3.5 and 4.25 sites were developed as their current configuration (i.e. as narrow strips of cleared land adjacent to the HAHD gravel access road) during construction of HAHD during the late 1950's and early 1960's. Electrical utilities (in the form of a pole-mounted transformer and electrical utility stub-ups) were installed at the the upper Milepost 3.5 site likely around the early 2000's to support use of the site by construction trailers working on the FPF excavation and cofferdam project. The proposed construction support sites located south of the river appear to have been first cleared between 1957 and 1968, likely in support of the orginal construction of HAHD. They have since been used in the 2000's and 2010's to host construction trailers and laydown areas. The proposed construction support site at Milepost 6.5 was first developed by at least 1952 as a powerline corridor. The first significant disturbance of the ground surface at the Site is first apparent by at least 1957 and is interpreted to be use of the site as a gravel pit. In the 2000's and 2010's, the Milepost 6.5 Site hosted construction trailers and construction material stockpiling/laydown areas. The Milepost 6.5 Site also received excavated soil and sediment from construction of the HAHD FPF excavation and cofferdam project.

4 ENVIRONMENTAL DATA BASE REVIEW

4.1 Regulatory Agency Databases Records Search

A search of applicable environmental records sources, as defined in American Society for Testing and Materials (ASTM) E-1527 - 13, was performed using EDR's® radius map search to obtain recognized environmental conditions. Reviews of records related to the project site and nearby properties kept by both Federal and State, regulatory agencies were conducted. This review was used to help identify known or potential sources of contamination that could adversely affect the lease area. Table 1 provides a summary of the ASTM standard environmental records sources databases searched and corresponding radii and quantitative results of the record search corresponding to databases. Figure 26 shows the results of the EDR reporting of environmental records in search distance proximity to HAHD.

Table 2. Source lists and associated number of sites for HAHD

Agency	Description	Search Radius (miles)	Results
U.S. EPA	National Priorities List (NPL)	1.0	0
U.S. EPA	Proposed NPL Sites	1.0	0
U.S. EPA	Delisted NPL Sites	1.0	0
U.S. EPA	Comprehensive Environmental Response, Compensation, and Liability Information System	0.5	0
U.S. EPA	RCRA Generators	0.25	1
U.S. EPA	RCRA Treatment, Storage, or Disposal Facilities	0.5	0
U.S. EPA	RCRA Corrective Action Sites	1.0	0
U.S. EPA	Institutional Controls Registry	0.5	0
WA Dept of Ecology	Leaking Underground Storage Tank List	0.5	0
WA Dept of Ecology	Confirmed and Suspected Contaminated Sites List	1.0	1
WA Dept of Ecology	Environmental Covenants List	Property only	0
WA Dept of Ecology	No Further Action Sites	1.0	1

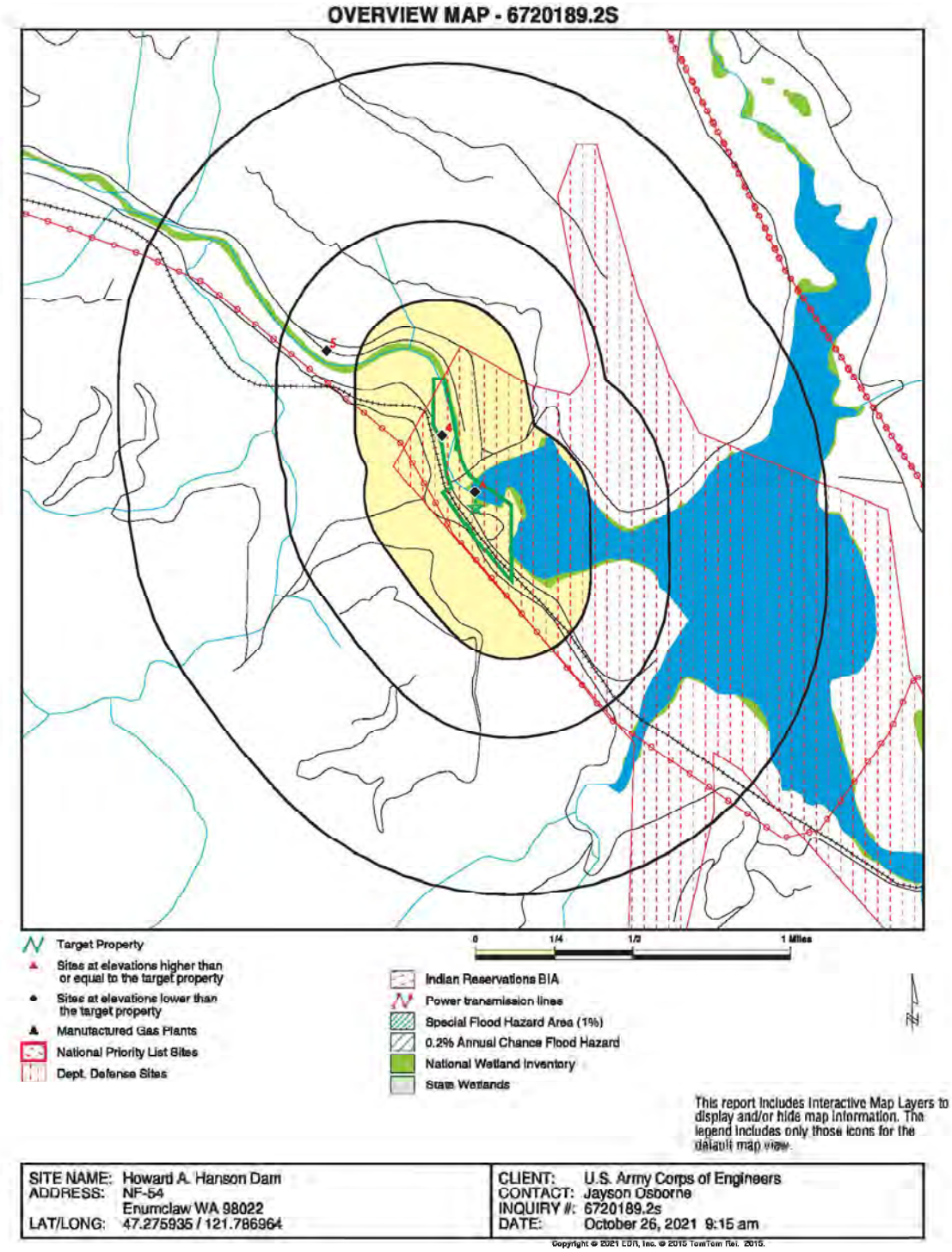

Figure 26. EDR Radius Map for Sites within 1 Mile of HAHD.

Site "A" on the EDR Radius Map represents a number of environmental records entries: coverage for Traylor Brothers (a federal contractor working at HAHD) under the NPDES Construction General Stormwater Permit; removal of 6 underground storage tanks (USTs) reported in 1996; closure in place of 2 USTs in 1996; closure in place of 1 UST in 2012; and intermittent generation of hazardous wastes that

were manifested and disposed of by HAHD under RCRA small or very small quantity generator status. The HAHD USTs have been removed or closed in place with no further action required.

Site "4" on the EDR Radius Map represents that HAHD is a listed facility in EPA's Enforcement and Compliance History Online (ECHO) database. EPA's facility report for HAHD can be accessed online at https://echo.epa.gov/detailed-facility-report?fid=110006883925 The ECHO facility report shows no compliance or enforcement activity has occurred at HAHD in the past three years.

Site "5" on the EDR Radius Map is at the location of the proposed lower Milepost 3.5 construction support site. A cleanup of spilled diesel fuel occurred while the site was occupied by Jensen Drilling (a federal contractor working at HAHD) in the timeframe of 2010-2011. Cleanup of contaminated soil was completed under the Washington State Department of Ecology Voluntary Cleanup Program. The remedial action lowered petroleum levels in the soil to below Washington State MTCA-A cleanup levels. No Further Action status was received for this site in March 2011 (WADOE 2021b).

4.2 Recognized Environmental Conditions

4.2.1 Milepost 3.5

There are no known releases to the environmental due to historic or current operations at the upper proposed construction support sites at Milepost 3.5. There was a diesel spill and cleanup in 2011 at the lower proposed construction support site. Environmental remediation is complete and there are no ongoing monitoring or clean up actions at this site.

4.2.2 Milepost 4.25

Numerous historical USTs associated with operation of HAHD were at or near the proposed construction support sites at Milepost 4.25. These USTs are all currently closed (either by removal or closure in place) and there are no ongoing monitoring or clean up actions associated with the USTs.

4.2.3 Milepost 6.5

There are no records of releases or spills to the environment at the Milepost 6.5 site.

4.2.4 Sites on south side of Green River immediately downstream of HAHD

There are no records of releases or spills to the environment at the proposed construction support sites located on the south side of the Green River.

5 SITE VISIT AND INTERVIEW

A site visit was conducted on 6 December 2021. The site visit provided the means to collect data regarding the physical condition, identify hazardous waste releases, and other site conditions that could affect the environmental conditions of the property. A log of captioned photos taken during the site visit is presented in Attachment B. No observation indicating a past spill or release to the environment was made during the site visit.

An interview was conducted on 27 January 2022. Topics of discussion included queries relevant to the HAHD construction support sites taken from a standardized list of questions for Phase I Environmental Site Assessment interviews, as well specific questions tailored to the current and historical use of the proposed construction support sites. Based on the interview responses, the historical use of construction support sites was confirmed. The interview responses were also consistent with other sources regarding

the closure and no-further-action status of USTs at HAHD. The interview responses confirmed the understanding of the fuel spill and cleanup at the Milepost 3.5 lower site. No other items of significance were revealed during the interview process. A full record of interview questions and responses is presented in Attachment A.

6 SUMMARY OF FINDINGS AND CONCLUSIONS (ENVIRONMENTAL CONDITIONS OF PROPERTY)

The findings indicate that past releases associated with use of the proposed construction support sites at HAHD have occurred. Specifically, there is a documented spill of diesel fuel and remediation of soil at the lower Milepost 3.5 site. Remedial action is complete and no further cleanup or monitoring is required. Past uses of adjacent properties to HAHD construction support sites are related to rail transportation, drinking water production, and logging. There are no recorded releases to the environment at adjacent properties that have any significant effect on the subject properties. The environmental condition of property for the Milepost 3.5 upper site, the Milepost 4.25 sites, the Milepost 6.5 site, and sites south of the Green River have been given a Type 1 designation because there is no record of release or disposal of contamination at these locations. The environmental condition of property for the Milepost 3.5 lower site has been given a Type 4 designation for the following reasons:

- Known releases of petroleum products have occurred in soil.
- Cleanup actions have been completed and no further actions are required.

The environmental condition of property of the Site is as follows:

Table 3. Environmental Condition of Property.

Site	Environmental Condition of Property
Milepost 3.5 upper site; Milepost 4.25 sites; Milepost 6.5 site; and sites south of the Green River	Type 1—Areas where no release, or disposal of hazardous substances or petroleum products or their derivatives has occurred, including no migration of these substances from adjacent areas.
Milepost 3.5 lower site	Type 4— Areas where release, disposal, or migration, or some combination thereof, of hazardous substances has occurred, and all remedial actions necessary to protect human health and the environment have been taken.

6.1 Recommendations

This ECP identified no recommendations.

7 REFERENCES

American Society for Testing and Materials (ASTM). 2010. D5746-98 (Reapproved 2010) Standard Classification of Environmental Condition of Property Area Types for Defense Base Closure and Realignment Facilities. 2010 (Reapproved).

ASTM. 2013. Standard Practice for Environmental Site Assessments: Phase I Environmental Site Assessment Process. 2013 (Reapproved).

National Interagency Fire Center (NIFC). 2021. NIFC GIS portal, Fire History – Current Decade. Accessed December 28, 2021. https://maps.nwcg.gov/sa/#/%3F/%3F/47.2315/-121.7499/11

Natural Resources Conservation Service (NRCS). 2021. Accessed December 22, 2021. https://websoilsurvey.sc.egov.usda.gov/App/WebSoilSurvey.aspx

Tacoma Public Utilities (TPU). 2018. Watershed Management Plan. February.

United States Geological Survey (USGS). 2000. Geologic Investigations Series, Map I-2538. Geologic Map of the Snoqualmie Pass 30 x 60 Minute Quadrangle, Washington. Prepared by: R.W. Tabor, V.A. Frizzell, Jr., D.B. Booth, and R.B. Waitt.

Washington State Department of Ecology (WADOE). 2011. Green River Temperature Total Maximum Daily Load Water Quality Improvement Report. June.

WADOE. 2021a. Water Quality Atlas. Accessed December 28, 2021. https://apps.ecology.wa.gov/waterqualityatlas/wqa/map

WADOE. 2021b. Cleanup and Tank Search, No Further Action Sites List, UST Site #12865. https://apps.ecology.wa.gov/cleanupsearch/reports/cleanup/sitedetails/12865

8 ATTACHMENTS

Attachment A: Interview Record

Environmental Condition of Property – Streamlined Interview Questionnaire

Interview Questionnaire Form

Project Name/Properties: Howard A. Hanson Dam AWSP FPF construction support sites
Address/Location: Proposed construction support sites near HAHD, Ravensdale, WA (see Attachment 1 below)
Date: 27JAN2022
Interviewer: Jayson Osborne
Person being interviewed: William A Boyle
Person being interviewed is the: Dam Equipment Supervisor
Location of interview: via email
Current Land Use: vacant

1. Q: To the best of your knowledge, have the Properties ever been used for industrial and/or commercial purposes? If yes, what type of industrial/commercial activities are/were conducted at the facility and for how long? Describe each industrial/commercial process(es) with respect on how hazardous substances are used in the process:

A: Yes. The properties in question have been utilized as Contractor laydown, office and Admin areas for the purpose of construction.

2. Q: Have adjacent properties ever been used for industrial and/or commercial purposes? If yes, what type of industrial/commercial activities are/were conducted at the adjacent properties and for how long?

A: Unknown

3. Q: Describe any structures that have been built or placed at the Properties and their construction age:

A: No structures have been placed to my knowledge

4. Q: Have there ever been potentially hazardous substances (such as paints, pesticides, dry cleaning fluids, automotive or industrial batteries, petroleum products, munitions, explosives, or any other hazardous wastes or materials) stored, used, dumped, buried or disposed of on the Property? If yes, describe the hazardous substances and the circumstances of their use or disposal at the Property:

A: Not to my knowledge

5. Q: Is there currently or has there ever been any stained soil on the Property? Has fill dirt from a contaminated site or from an unknown origin ever been brought onto the Property?

A: No

6. Q: Are there storage tanks (underground or aboveground) currently located or previously located on the Property? If yes, describe the tank size, configuration, and substances stored:

A: There are currently three underground storage tanks at HAHD that have been remediated in place with certification from DOE (i.e. the Washington State Department of Ecology). Location is at the 4.25 mile, the old fuel station and behind the old administration building inside the perimeter fencing. Fuel station tanks were 1000 gallon each of gas and diesel. Old Admin tank was for generator and boiler system heater for old admin building. There are currently 3 above ground storage tanks on property. One 2000 gallon diesel tank at the Old administration building serving the plant generator and the 12 well system. On the Left bank, there are two above ground storage tanks. One serves as the Operational

fuels for the project, 1500 diesel and 500 gallon gasoline. The other is 2000 gallons of diesel which feeds the Generator for the entire Left Bank buildings.

7. Q: Has a private water well or a non-public water system ever served the Property? If yes, has the well or water system has been designated contaminated by any government environmental or health agency?

A: There is an abandoned well (Well 10) that used to provide non-potable water to the Old Admin Building located along the roadway on the Right Bank. Its sole purpose was to provide flushing water for the toilets. There is an in place private drinking water well on the Left Bank behind the New Administration Building that provides potable water for the Admin bldg. and the Maintenance building.

8. Q: Are there any dry wells located on the Property?

A: Well over 100 well designated as monitoring purposes only for ground water.

9. Q: Has there ever been a septic system used on the Property? If yes, are there any as-built drawings available showing the location of septic systems and drainfields on the Property?

A: There is a septic system in place along the access road at the 4 mile marker. No as builts that I know of.

10. Q: Have there ever been any environmental liens; federal, state, or local government agency notices of violations; or any other enforcement actions concerning environmental issues with respect to the Properties or any facility located on the Properties? If yes, please describe:

A: Yes. A fuel spill, diesel, by a contractor that was remediated after finding the source and the leak in approx.. 2005. This remediation took place at the junction of the Mainline and the 5509 access road to the toe of the dam.

11. Q: Have there been any environmental studies conducted on the Properties or facility located on the Properties? If yes, did the study indicate the actual or suspected presence of contamination at the Properties; and was further assessment or remedial cleanup action recommended?

A: Unknown

12. Q: Regarding the proposed construction support area at Milepost 6.5 (located in the Tacoma Power powerline corridor): Can you describe the history and use of this site for borrow and spoils soil and sediment in support of prior construction at HAHD? Have spoils/borrow soil brought to this site been characterized for environmental contaminants? If yes, please briefly describe the results of the soil/sediment characterization results.

A: Not to my knowledge.

13. Q: Is there anyone else we can interview about the Property?

A: Tacoma Public Utilities

14. Q: Is there any other information that you can share that would be helpful for understanding the environmental condition of the property?

A: No

Attachment 1:

The proposed AWSP FPF construction support sites are highlighted in pink.

Attachment B: Site Visit Photos

Following is summary of locations visited on December 6th, 2021 for purposes of completing the Phase I Environmental Site Assessment site visit and to gather a complete understanding of current conditions on the ground at the HAHD AWSP FPF proposed construction support sites. Figures with a key of photo locations are presented first, followed by captioned photos from the site visit.

Photo key for locations of photos taken December 6th, 2021 at the Milepost 3.5 sites.

Photo key for locations of photos taken December 6th, 2021 at the Milepost 4.25 sites.

Photo key for locations of photos taken December 6th, 2021 at the Milepost 6.5 sites.

Photo key for locations of photos taken December 6th, 2021 at construction support sites on the south side of the river immediately downstream of HAHD.

Photo 1. Milepost 3.5 lower site. View looking from the top of the site near the road "Y" looking southeast.

Photo 2. Milepost 3.5 lower site. View looking from the about the middle of the site to the northwest and toward the road "Y".

Photo 3. Milepost 3.5 lower site. View looking from the about the middle of the site looking to the southeast.

Photo 4. Milepost 3.5 upper site. View from the center of the site looking toward the northwest.

Photo 5. Milepost 3.5 upper site. View from the center of the site looking toward the north. Large excavator parked on the site and two utility stub-ups visible in this photo. Areas on the edge of the upper Milepost 3.5 appear to be recently graded (see next photo), perhaps using this excavator.

Photo 6. Detail example of apparent recently graded areas at the Milepost 3.5 site. View looking toward the southeast.

Photo 7. Milepost 3.5 upper site. View from the center of the site looking toward the northeast.

Photo 8. Milepost 3.5 upper site. View from the center of the site looking toward the east. Some utility stub-ups visible in this photo.

Photo 9. Milepost 3.5 upper site. View from the center of the site looking toward the southeast.

Photo 10. Milepost 3.5 upper site. View from the center of the site looking toward the south. A pole-mounted transformer (not visible) is mounted on the utility pole shown on the left side of this photo.

Photo 11. Milepost 4.25: the mile area at Milepost 4.25 is this expanded shoulder on the side of the HAHD access road. View looking north. The other site at Milepost 4.25 (not pictured in great detail here) is a smaller area near the entrance to the top of the HAHD dam structure near the former project administration

building.

Photo 12. Milepost 4.25. View looking south. The entrance to the top of the HAHD dam structure is nearly in view from this location - straight ahead and then to the right.

Photo 13. Milepost 4.25. View looking south – this photo closer to the entrance to the top of the HAHD dam than the previous one.

Photo 14. Milepost 6.5. View from the southern part of the site just off the forest service road (NF-54). Looking toward the northwest. Forest road (NF-54) visible on the left side of the photo.

Photo 15. Milepost 6.5. View from the southern part of the site just off the forest service road (NF-54). Looking toward the north.

Photo 16. Milepost 6.5. View from the southern part of the site just off the forest service road (NF-54). Looking toward the northeast. Debris in background are small logs.

Photo 17. Milepost 6.5. View from the southern part of the site just off the forest service road (NF-54). Looking toward the east.

Photo 18. Milepost 6.5. View from the southern part of the site just off the forest service road (NF-54). Looking toward the southeast. Site here is graded flat and slopes gently towards the east.

Photo 19. Milepost 6.5. View from the southern part of the site just off the forest service road (NF-54). Looking toward the east southeast.

Photo 20. Milepost 6.5. View from the southern part of the site just off the forest service road (NF-54). Looking toward the south. Forest road NF-54 visible on the right side of the photo.

Photo 21. Milepost 6.5. View from the center of the site looking toward the southwest. A row of boulders and an access road leading off the forest service road are visible on the right side of the photo.

Photo 22. Milepost 6.5. View from the center of the site looking toward the northwest.

Photo 23. Milepost 6.5. View from the center of the site looking toward the north. Another side access road leading to the Forest Service road (NF-54) is visible in the background.

Photo 24. Milepost 6.5. View from the center of the site looking toward the northeast.

Photo 25. Milepost 6.5. View from the center of the site looking toward the east.

Photo 26. Milepost 6.5. View from the center of the site looking toward the southeast.

Photo 27. Milepost 6.5. View from the center of the site looking toward the south. Row of boulders are situated along the access road (which leads to Forest Service Road NF-54).

Photo 28. Milepost 6.5. View from center of the northern half of the site. Looking towards the north-northwest. The old set of trailer wheels (foreground, right) has been on site since about 2014.

Photo 29. Milepost 6.5. View from center of the northern half of the site. Looking towards the south.

Photo 30. Milepost 6.5. View from center of the northern half of the site. Looking towards the northwest. Mounds of ungraded placed soil are present on the northern-most portion of the site (visible in the background on the right of this photo).

Photo 31. Milepost 6.5. View from center of the northern half of the site. Looking towards the north-northeast.

Photo 32. Milepost 6.5. View from the northern end of the site looking towards the west. Detail of the ungraded placed soil at the northern end of the site.

Photo 33. Sites on the south side of the river immediately downstream of HAHD. This photo taken on the access road from HAHD, looking toward the west.

Photo 34. Sites on the south side of the river immediately downstream of HAHD. This photo taken on the access road from HAHD, looking toward the west-northwest.

Photo 35. Sites on the south side of the river immediately downstream of HAHD. This photo taken on the access road from HAHD, looking toward the northwest. Some large concrete blocks are in place on the edge of one of the sites.

Photo 36. Sites on the south side of the river immediately downstream of HAHD. This photo taken on the access road from HAHD, looking toward the north-northwest.

Photo 37. Sites on the south side of the river immediately downstream of HAHD. View from the end of one of the sites – the other site is visible across the road in the far background. View looking towards the southwest.

Photo 38. Sites on the south side of the river immediately downstream of HAHD. Detail of the other proposed construction support site. A few trailers were parked here. View looking towards the southeast.

Photo 39. Sites on the south side of the river immediately downstream of HAHD. Detail of the other proposed construction support site. View looking towards the east.

Photo 40. Sites on the south side of the river immediately downstream of HAHD. Detail of 300-gallon water tote on one of the trailers presently parked at the site. The tote appeared to be empty at the time of the site visit.

Howard A. Hanson Dam
Additional Water Storage Project

Section 902 Post Authorization Change Validation Study – Fish Passage
King County, Washington

APPENDIX B-9

DRAWINGS

Final Integrated Validation Report and

Supplemental Environmental Impact Statement

US Army Corps of Engineers®
Seattle District

TACOMA POWER
TACOMA WATER
TACOMA RAIL
TACOMA PUBLIC UTILITIES

US Army Corps of Engineers ®
Seattle District

DRAFT FEASIBILITY STUDY

FY25 P2-488932 HAHDFPF
HOWARD A. HANSON DAM FISH PASSAGE FACILITY

PALMER, WASHINGTON

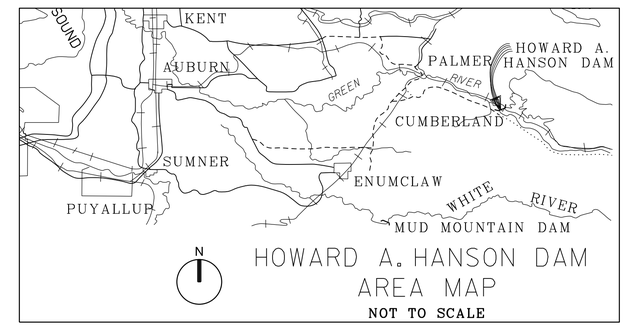

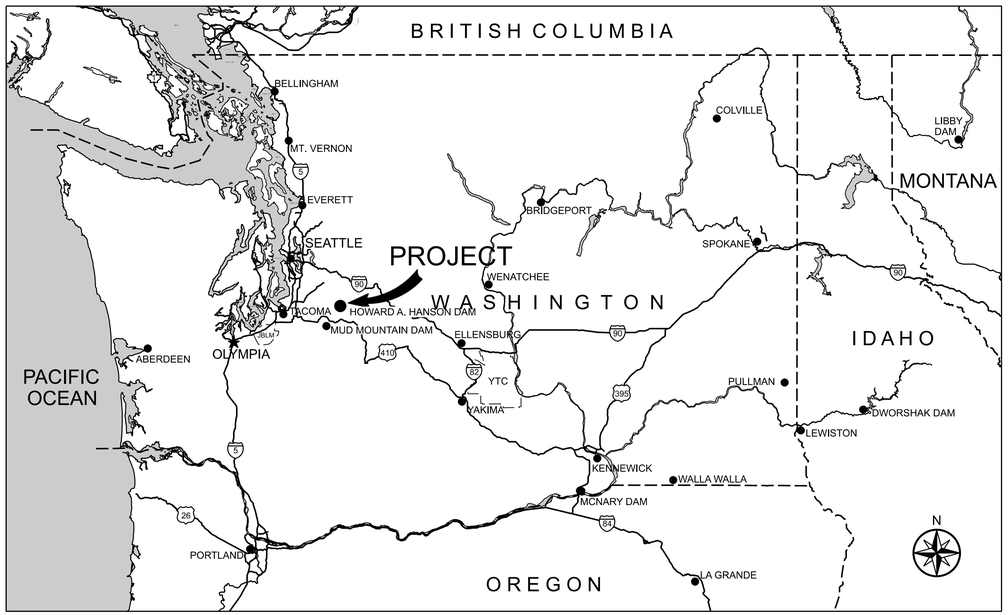

PROJECT VICINITY MAP
NTS

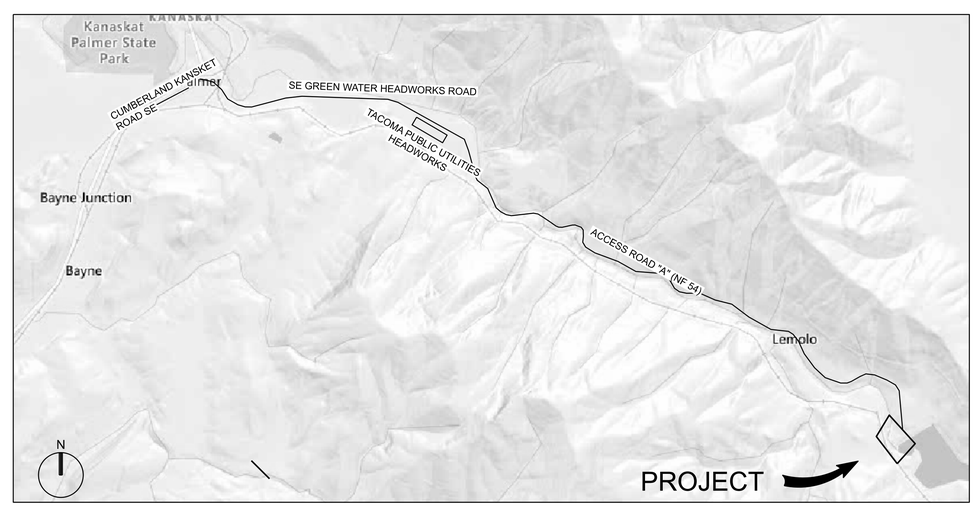

PROJECT LOCATION MAP
NTS

SAFETY FIRST

IF SHEET MEASURES LESS THAN 22" X 34" IT IS A REDUCED PRINT. REDUCE SCALE ACCORDINGLY.

US Army Corps of Engineers ®
Seattle District

Date: 09 NOVEMBER 2021
Solicitation No.: -
File No.: E-56-14-22

Recommended by: GUY L. GREEN, P.E. — Chief, Design Branch — 11/09/21 Date
Approved by: JOANN T. WALLS, P.E. — Chief, Engineering Div. — 11/09/21 Date

Submitted by: KATHERINE LaPONTE — Project Manager — 11/09/21 Date
Reviewed by: ANIL L. NISARGAND, P.E. — Chief, Specs. and Tech Review — 11/09/21 Date

U.S. ARMY CORPS OF ENGINEERS
SEATTLE DISTRICT
SEATTLE, WASHINGTON

Prepared by: JENNIFER L. WEST — Chief, Civil Section — 11/09/21 Date

FY22 P2-474522 DER
DUCKABUSH ECOSYSTEM RESTORATION
BRINNON, WASHINGTON

TITLE, VICINITY AND LOCATION MAPS

SHEET IDENTIFICATION
G-001

FILE PATH: pw://PWINT-WPC.EIS.DS.USACE.ARMY.MIL:CENWS - Seattle District/Documents/Civil Works/Howard Hanson Dam, WA/FY25_P2-488932_HAHDFPF/Plan Sets/03_Sheets/G-001 COVER SHEET
PLOT DATE: 9:14:33 AM 11/29/2021

FY25 P2-488932 HAHDFPF
DRAWING INDEX

SHEET INDEX

01 GENERAL

G-001 COVERSHEET
G-002 INDEX OF DRAWINGS
G-003 SYMBOLS, ABBREVIATIONS, & GENERAL NOTES
G-004 ISOMETRIC FRONT VIEW
G-005 ISOMETRIC SIDE VIEW
G-006 ISOMETRIC OBLIQUE VIEW
G-007 INTAKE ISOMETRIC SECTIONS
G-008 FULL FLOW ISOMETRIC SECTIONS
G-009 ISOMETRIC FACILITY VIEW

G-101 CONSTRUCTION LIMITS SITE PLAN
G-102 STAGING AREAS SITE PLAN
G-103 GENERAL SITE PLAN
G-104 EXISTING SITE CONDITIONS PLAN
G-105 FACILITY PLAN VIEW
G-106 INLET ELEVATIONS
G-107 CENTERLINE OF THE COLLECTOR CROSS SECTION
G-108 ENLARGED SECTION OF MIS/HORN
G-109 CENTERLINE OF PRIMARY BYPASS
G-110 CENTERLINE OF FULL FLOW BYPASS
G-111 SECTION CUT ALONG BYPASS CONDUIT
G-112 TOWER SECTION ADJACENT TO EXISTING RO
G-113 TOWER AND ELEVATOR ACCESS
G-114 OUTFALL STRUCTURE
G-115 STRUCTURE EXCAVATION PLAN
G-116 STRUCTURE EXCAVATION PROFILE
G-117 STRUCTURE EXCAVATION SECTION 4+50
G-118 DOWNSTREAM ROAD PLAN AND PROFILE
G-119 DOWNSTREAM CHANNEL PLAN
G-120 TUNNEL PLAN AND PROFILE

US Army Corps of Engineers®

MARK	DESCRIPTION	DATE

DESIGNED BY:
DRAWN BY:
CHECKED BY:
SUBMITTED BY: KATHERINE LaPONTE
SIZE:
ISSUE DATE: 09 NOVEMBER 2021
SOLICITATION NO.:
CONTRACT NO.:
FILE NO.: E-36-14-22

U.S. ARMY CORPS OF ENGINEERS
SEATTLE DISTRICT
SEATTLE, WASHINGTON

FY25 P2-488932-HAHDFPF
HOWARD A HANSON DAM FISH PASSAGE FACILITY
GREEN RIVER, WASHINGTON

DRAWING INDEX

SHEET ID
G-002

DRAFT FEASIBILITY DESIGN

FILE PATH: pw://PWINT-WPC.EIS.DS.USACE.ARMY.MIL:CENWS - Seattle District/Documents/Civil Works/Howard Hanson Dam, WA/FY25_P2-488932_HAHDFPF/Plan Sets/03_Sheets/DRAWING INDEX
PLOT DATE: 10:32:56 AM 11/29/2021

LEGEND

SURVEY

THEOR./ EXIST.	FOUND/ PROP.	DESCRIPTION (ABBR)
		ANGLE POINT
		BENCH MARK
		REBAR/IRON PIPE
		MONUMENT (IN CASE)
		MONUMENT (SURFACE)
× ELEV	× ELEV	SPOT ELEVATION

EXISTING		THIS CONTRACT
W 8"	WATER LINE & PIPE SIZE	
SAN 6"	SANITARY SEWER & PIPE SIZE	
ST 10"	STORM DRAIN & PIPE SIZE	
	STORM DRAIN MANHOLE W/ TOP & INVERT ELEVATIONS	D EL 8.65 IE 6.00
	CATCH BASIN W/ TOP & INVERT ELEVATIONS	CB EL 8.65 IE 6.00
	BUILDING OR STRUCTURE	
101 1M	INSTRUMENTATION	
	PROPOSED GROUND	
	PROJECT CONSTRUCTION LIMITS	
	TREE	
	VEGETATION	
	LIGHT POLE	
	CONCRETE PAVEMENT	
	LANDSCAPE/HYDROSEED	
250	CONTOUR	250
250.9	SPOT ELEVATION	250.9
	GRAVEL ROAD/SURFACING	

DRAFTING

- A1 / C-304 — DIRECTION OF VIEW; LETTER/NUMBER INDICATES GRID LOCATION; PLATE NUMBER WHERE SECTION IS DRAWN
- A1 / C-502 — LETTER/NUMBER INDICATES GRID LOCATION; PLATE NUMBER WHERE DETAIL IS DRAWN
- N — NORTH ARROW
- 0 20 40 — GRAPHIC SCALE (FEET)

ABBREVIATIONS

AC	ASPHALT
A/G	ABOVEGROUND
BRDG	BRIDGE
CLF	CHAIN LINK FENCE
COR	USACE CONTRACTING OFFICER REPRESENTATIVE
D	DELTA
Dc	DEGREE OF CURVATURE
E	EAST
EL, ELEV	ELEVATION
EMB	EMBANKMENT
EO	EDGE OF
EOA	EDGE OF ASPHALT
EOC	EDGE OF CONCRETE
EOG	EDGE OF GRAVEL
EP	EDGE OF PAVEMENT
EXC	EXCAVATION
EXIST	EXISTING
FIG	FIGURE
FT	FEET/FOOT
H, HORIZ	HORIZONTAL
IE	INVERT
IN	INCH/INCHES
INV	INVERT ELEVATION
L	LENGTH
LF	LINEAL FOOT/FEET
LT	LEFT
MIN	MINIMUM
MISC	MISCELLANEOUS
N	NORTH
NTS	NOT TO SCALE
O/W	OIL/WATER
PCC	PORTLAND CEMENT CONCRETE
PI	POINT OF INTERSECTION
PC	POINT OF CURVATURE
PT	POINT OF TANGENCY
POB	POINT OF BEGINING
POE	POINT OF ENDING
R	RADIUS
STA	STATION
PVMT	PAVEMENT
REQD	REQUIRED
SECT	SECTION
SPEC	SPECIFICATION
STA	STATION
STD	STANDARD
S1	LAYOUT SURVEY CASE AND MONUMENT AND NUMBER
T	TANGENT
TEMP	TEMPORARY
TYP	TYPICAL
U/G	UNDERGROUND
VAR	VARIES
V, VERT	VERTICAL
VPI	VERTICAL POINT OF INTERSECTION
W/	WITH
W.S.	WATER SURFACE
WSDOT	WASHINGTON STATE DEPARTMENT OF TRANSPORTATION

GENERAL NOTES

CIVIL

1. ELEVATIONS SHOWN ON THESE DRAWINGS ARE BASED ON NGVD 1929 GA., SA., 47., VERTICAL DATUM

2. HORIZONTAL COORDINATES ON THESE DRAWINGS ARE BASED ON THE WASHINGTON STATE PLANE COORDINATE SYSTEM - NAD 27, NORTH ZONE.

3. CONTRACTOR SHALL VERIFY ALL DIMENSIONS BEFORE STARTING WORK AND SHALL IMMEDIATELY NOTIFY THE ENGINEER OF ANY DISCREPANCIES.

4. BEFORE EXCAVATION OR TRENCHING, CONTRACTOR SHALL CALL 1-800-424-5555 TO LOCATE UNDERGROUND UTILITIES. ANY DAMAGE TO EXISTING FACILITIES SHALL BE REPAIRED BY THE CONTRACTOR AT NO COST TO THE OWNER.

5. THE HORIZONTAL AND VERTICAL LOCATION OF EXISTING UTILITIES AND IMPROVEMENTS ARE APPROXIMATE. THE CONTRACTOR SHALL VERIFY THE EXACT LOCATION OF ALL UTILITIES AND IMPROVEMENTS PRIOR TO EXCAVATION TO AVOID DAMAGE AND DISTURBANCE. THE CONTRACTOR IS RESPONSIBLE FOR PROTECTING AND PRESERVING THE INTEGRITY OF ALL EXISTING UTILITIES DURING CONSTRUCTION.

6. ALL DISTANCES SHOWN ON THE DRAWINGS AND DESCRIBED IN THE SPECIFICATIONS SHALL BE INTERPRETED TO REFER TO HORIZONTALLY AND VERTICALLY PROJECTED PLANES UNLESS OTHERWISE NOTED.

7. SITE ACCESS DURING CONSTRUCTION IS LIMITED TO STABILIZED CONSTRUCTION ENTRANCES.

8. ALL SURFACES DISTURBED DURING CONSTRUCTION AND NOT SCHEDULED TO RECEIVE GRAVEL, QUARRY SPALLS, OR OTHER SURFACING SHALL BE SEEDED, FERTILIZED, AND MULCHED IN ACCORDANCE WITH THE SPECIFICATIONS OR AS DIRECTED BY THE COR.

9. THE CONTRACTOR SHALL BE RESPONSIBLE FOR FULL RESTORATION OF ALL EXISTING FEATURES DISTURBED DURING CONSTRUCTION TO THEIR ORIGINAL CONDITION UNLESS OTHERWISE INDICATED BY THE COR.

10. OTHER WORK ON-SITE MAY BE PERFORMED BY OTHER CONTRACTORS IN CONJUNCTION WITH THIS PROJECT.

11. EXPECT ROCK FOR EXCAVATIONS BELOW ELEVATION 1165 FEET.

12. THE CONTRACTOR SHALL NOT BLOCK ANY EXISITNG GATES OR ACCESS WITHOUT COORDINATING WITH THE USACE COR. ROAD BLOCKAGES SHALL BE MINIMIZED TO REDUCE DISRUPTION TO DAM OPERATIONS AND OTHER CONSTRUCTION PROJECTS AROUND THE DAM. AT LEAST ONE ACCESS ROAD ACCROSS THE DAM SHALL REMAIN OPEN AT ALL TIMES.

13. THE CONTRACTOR SHALL BE ABLE TO PROVIDE AND MAINTAIN PORTABLE LIGHT PLANTS WHEREVER CREWS ARE WORKING FOR REQUIRED SAFETY ILLUMINATION THAT SHALL OPERATE FROM DUSK TO DAWN, OR TO THE HOUR THAT WORK IS COMPLETED AT NIGHT. LIGHT PLANTS SHALL BE 6KW MINIMUM OUTPUT WITH LIGHT MAST.

14. BASIC FIRE FIGHTING AND SUPPRESSION EQUIPMENT IS REQUIRED FOR WORK IN FOREST AREAS FOR EACH DRILLING SITE AND VEHICLE. WORK SITE AND THE DISPOSAL SITE.

STA NAME	CONTROL POINTS NORTHING	EASTING	ELEVATION	DESCRIPTION
2200	102044.617	1763714.473	1229.962	SET 3 1/2" BRASS CAP STAMPED "CORPS OF ENGINEERS - US ARMY 2200 2008", IN NE CORNER OF CONCRETE PAD FOR PROPANE TANK
2201	103066.831	1763800.796	1227.812	SET 3 1/2" BRASS CAP STAMPED "CORPS OF ENGINEERS - US ARMY 2201 2008", IN CONCRETE
2202	102382.384	1763337.380	1201.535	SET 3 1/2" BRASS CAP STAMPED "CORPS OF ENGINEERS - US ARMY 2202 2008", IN CONCRETE RETAINING WALL
2203 (HOWH)	102647.199	1763137.437	1227.754	FOUND 2 1/2" KING COUNTY BRASS CAP IN CONCRETE.
2204 (5M)	102829.060	1763446.509	1228.874	FOUND 3 1/2" BRASS CAP IN CONC

US Army Corps of Engineers®

MARK	DESCRIPTION	DATE

DESIGNED BY: KATO
DRAWN BY: KATO
CHECKED BY: SKRINDE
SUBMITTED BY: KATHERINE LaPONTE
SIZE: ANSI D
ISSUE DATE: 09 NOVEMBER 2021
SOLICITATION NO.:
CONTRACT NO.:
FILE NO.: E-86-14-22

U.S. ARMY CORPS OF ENGINEERS
SEATTLE DISTRICT
SEATTLE, WASHINGTON

FY25 P2-488932-HAHDFPF
HOWARD A HANSON DAM FISH PASSAGE FACILITY
GREEN RIVER, WASHINGTON

SYMBOLS, ABBREVIATIONS AND GENERAL NOTES

SHEET ID
G-003

DRAFT FEASIBILITY DESIGN

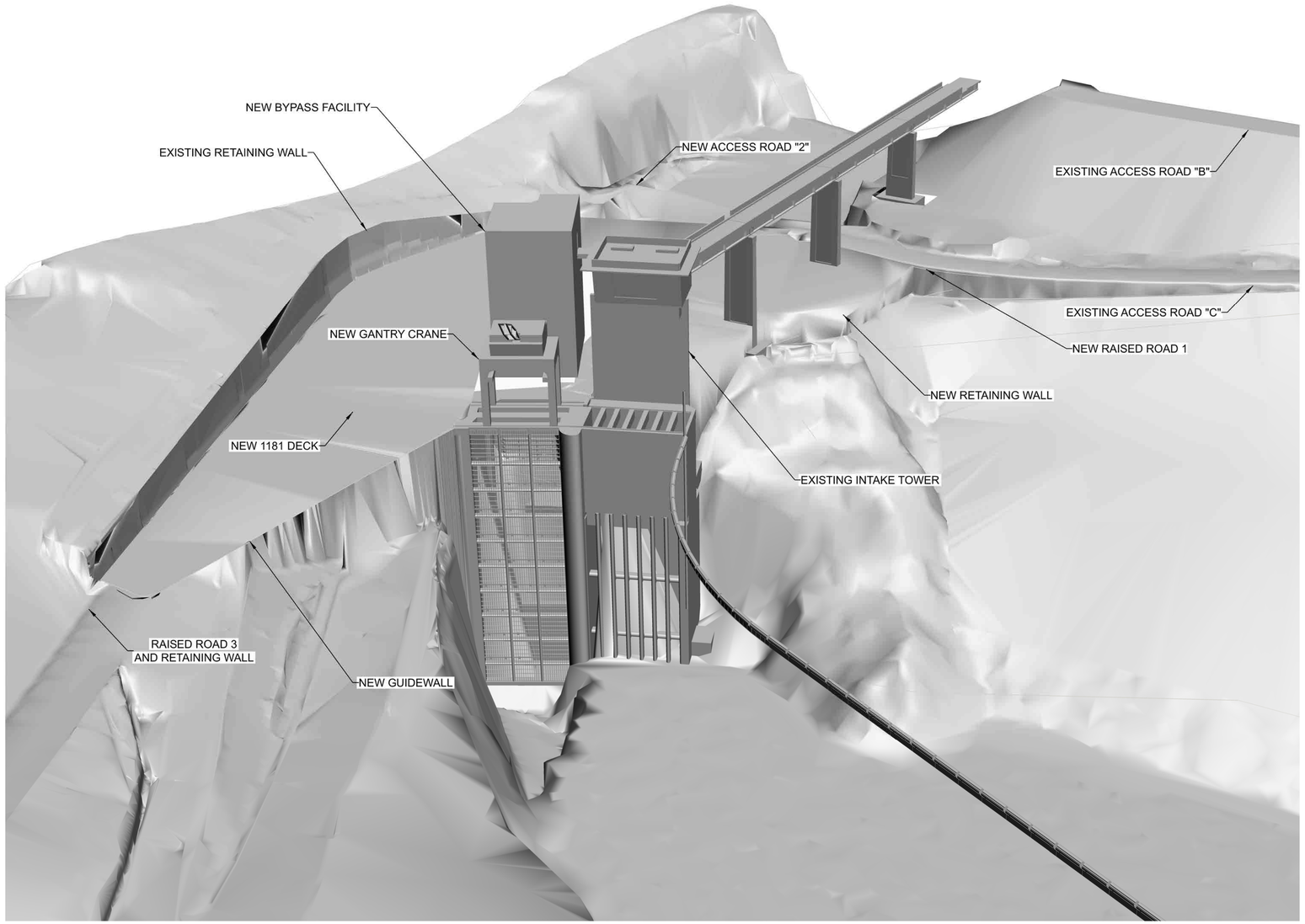

A1 ISOMETRIC FRONT VIEW
SCALE: NTS

US Army Corps of Engineers®

MARK	DESCRIPTION	DATE

U.S. ARMY CORPS OF ENGINEERS
SEATTLE DISTRICT
SEATTLE, WASHINGTON

DESIGNED BY:
DRAWN BY:
CHECKED BY:
SUBMITTED BY: KATHERINE LAFONTE
SIZE: %OPTION 2%
ISSUE DATE: 09 NOVEMBER 2021
SOLICITATION NO.:
CONTRACT NO.:
FILE NO.: E-56-14-22
%OPTIONAL VALUE 2%

FY25 P2-488932-HAHDFPF
HOWARD A HANSON DAM FISH PASSAGE FACILITY
GREEN RIVER, WASHINGTON

ISOMETRIC FRONT VIEW

SHEET ID
G-004

DRAFT FEASIBILITY DESIGN

FILE PATH: %PRODUCTION DATA 1%
PLOT DATE: %PRODUCTION DATA 2%

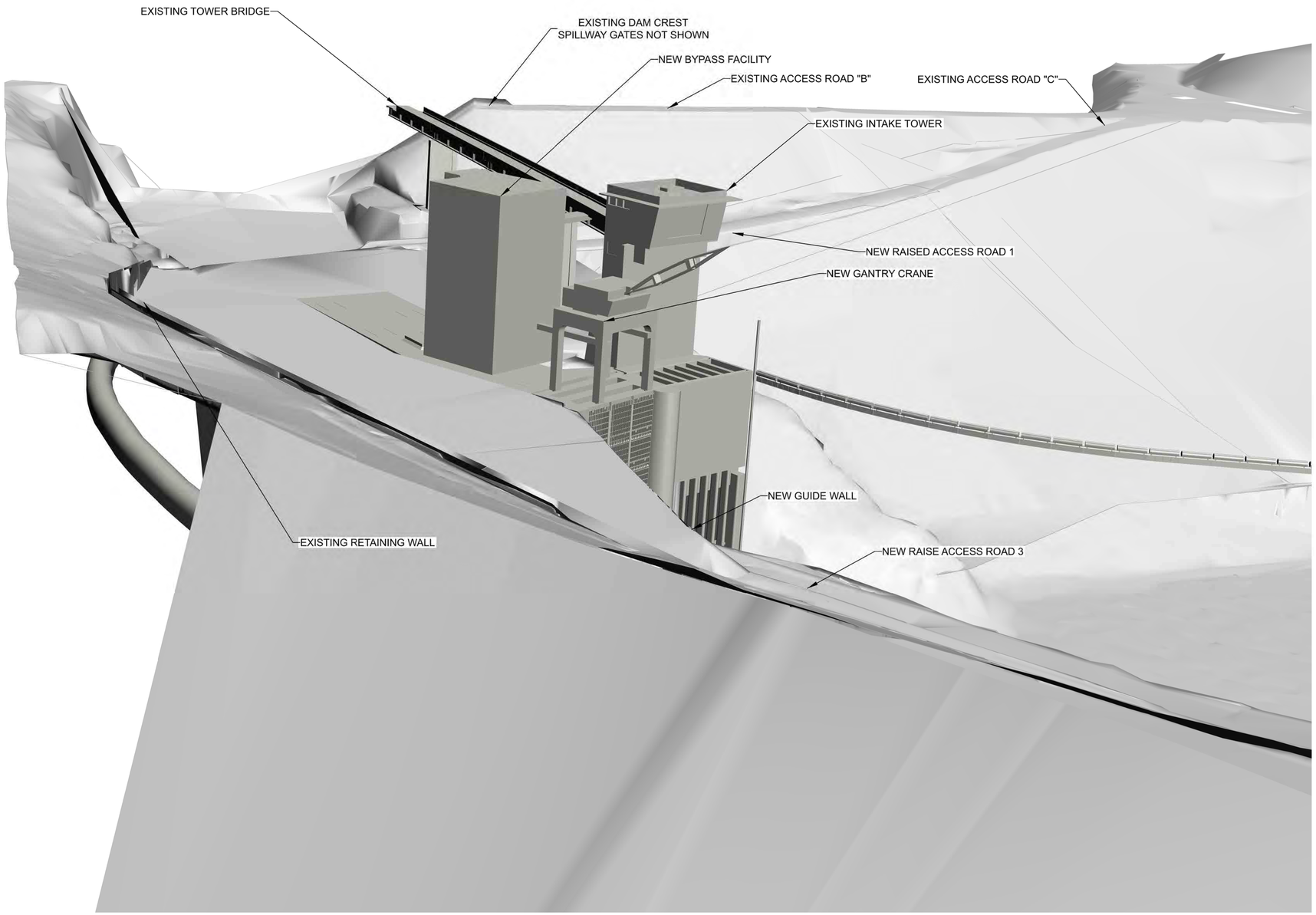

A1 ISOMETRIC SIDE VIEW
SCALE: NTS

US Army Corps of Engineers®

MARK	DESCRIPTION	DATE

DESIGNED BY:
DRAWN BY:
CHECKED BY:
SUBMITTED BY: KATHERINE LAFONTE
SIZE: %OPTION 2%
ISSUE DATE: 09 NOVEMBER 2021
SOLICITATION NO.:
CONTRACT NO.:
FILE NO.: E-56-14-22
%OPTIONAL VALUE 2%

U.S. ARMY CORPS OF ENGINEERS
SEATTLE DISTRICT
SEATTLE, WASHINGTON

FY25 P2-488932-HAHDFPF
HOWARD A HANSON DAM FISH PASSAGE FACILITY
GREEN RIVER, WASHINGTON

ISOMETRIC SIDE VIEW

SHEET ID
G-005

DRAFT FEASIBILITY DESIGN

FILE PATH: %PRODUCTION DATA 1%
PLOT DATE: %PRODUCTION DATA 2%

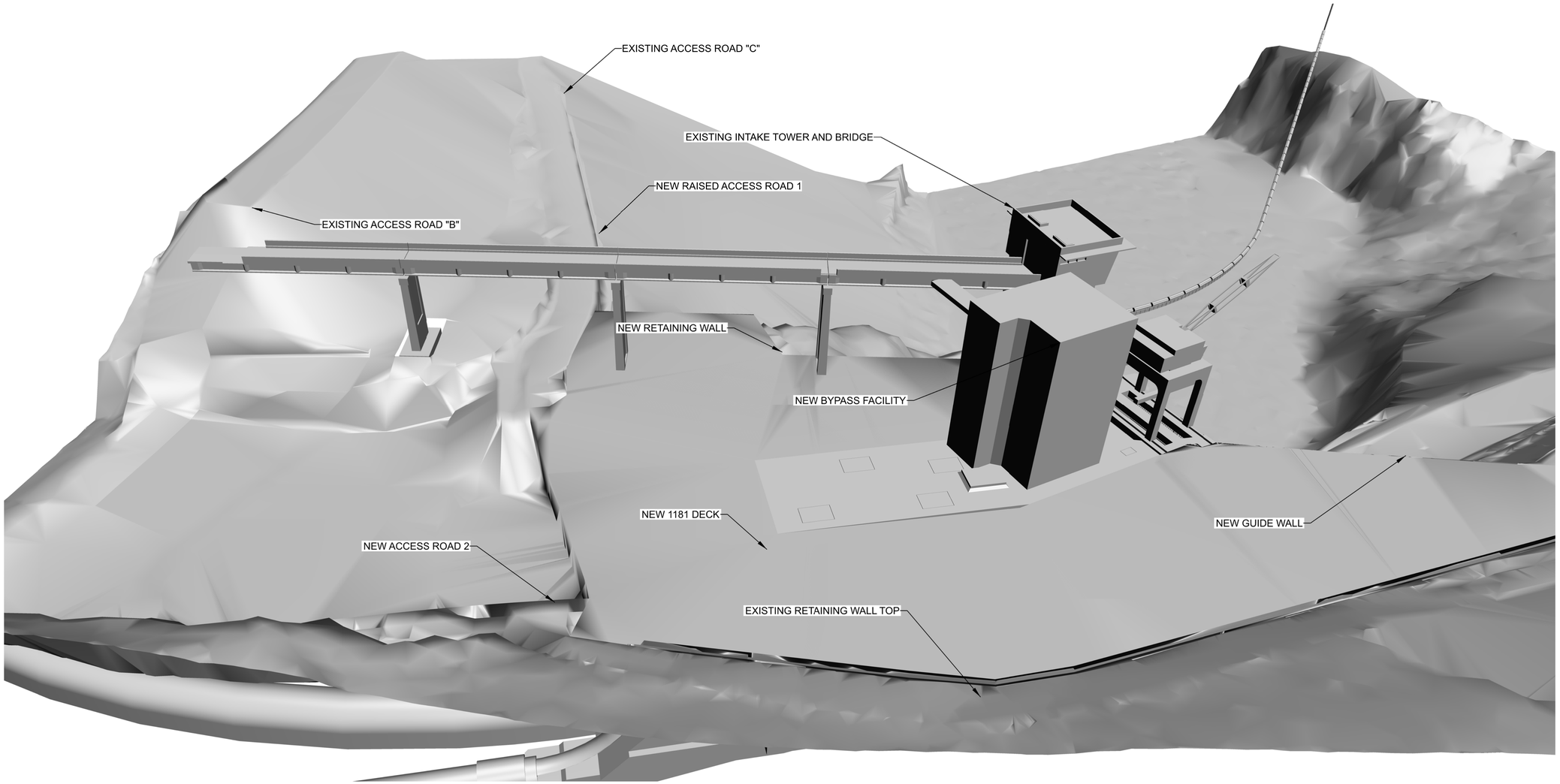

A1 OBLIQUE ISOMETRIC

SCALE: NTS

US Army Corps of Engineers®

MARK	DESCRIPTION	DATE

DESIGNED BY:
DRAWN BY:
CHECKED BY:
SUBMITTED BY: KATHERINE LaFONTE
SIZE: %OPTIONAL VALUE 2%
ISSUE DATE: 09 NOVEMBER 2021
SOLICITATION NO.:
CONTRACT NO.:
FILE NO.: E-86-14-22
%OPTIONAL VALUE 2%

U.S. ARMY CORPS OF ENGINEERS
SEATTLE DISTRICT
SEATTLE, WASHINGTON

FY25 P2-488932-HAHDFPF
HOWARD A HANSON DAM FISH PASSAGE FACILITY
GREEN RIVER, WASHINGTON

ISOMETRIC OBLIQUE VIEW

SHEET ID

G-006

DRAFT FEASIBILITY DESIGN

FILE PATH: %PRODUCTION DATA 1%
PLOT DATE: %PRODUCTION DATA 2%

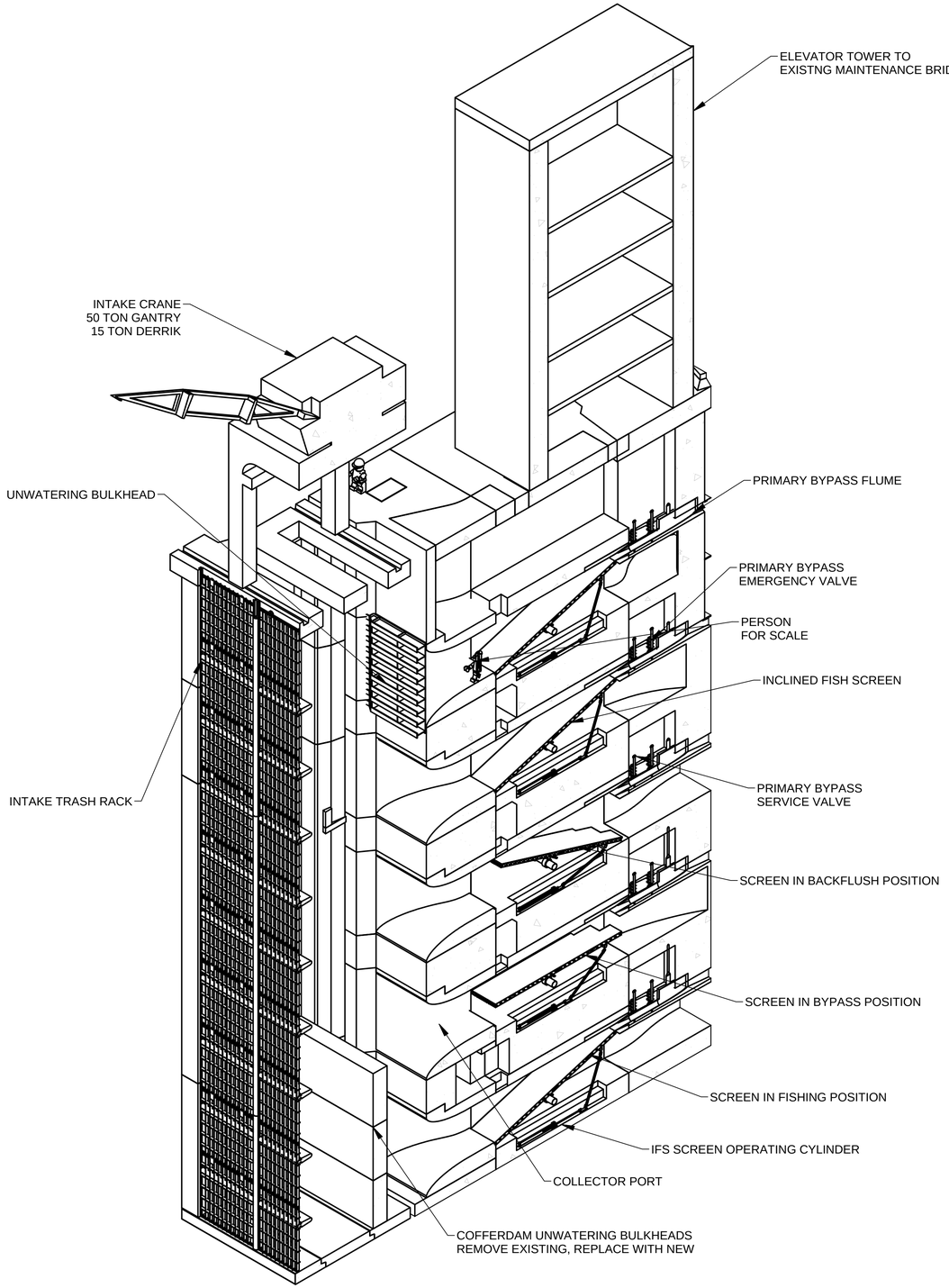

B1 BYPASS FACILITY INTAKE SECTION
SCALE: NTS

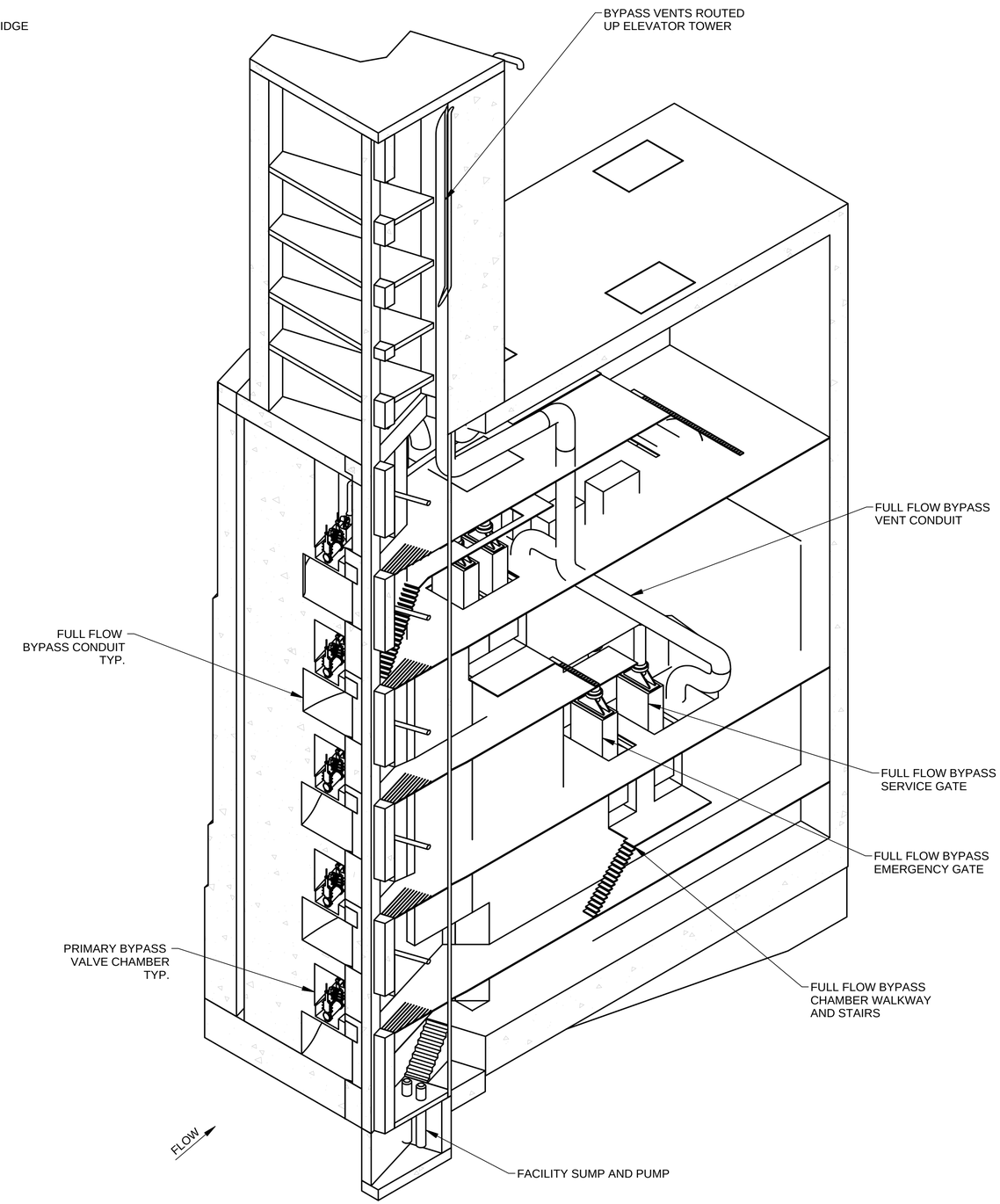

B11 BYPASS STRUCTURE ACCESS SECTION
SCALE: NTS

US Army Corps of Engineers ®

DATE: 09 NOVEMBER 2021
SOLICITATION NO.:
CONTRACT NO.:
DESIGNED BY: PHIL AUTH P.E.
DRAWN BY: P. AUTH
CHECKED BY:
SUBMITTED BY: KATHERINE LaPONTE
SIZE: ANSI D

U.S. ARMY CORPS OF ENGINEERS
SEATTLE DISTRICT
4735 EAST MARGINAL WAY SOUTH
SEATTLE, WASHINGTON 98134

U.S. ARMY CORPS OF ENGINEERS
WALLA WALLA DISTRICT
201 N 3RD AVE.
WALLA WALLA, WASHINGTON 99362-1876

FY25 P2 489932 HAHDFPF
HOWARD A. HANSON DAM FISH PASSAGE FACILITY
GREEN RIVER, WASHINGTON

INTAKE ISOMETRIC SECTIONS

SHEET ID
G-007

DRAFT FEASIBILITY DESIGN

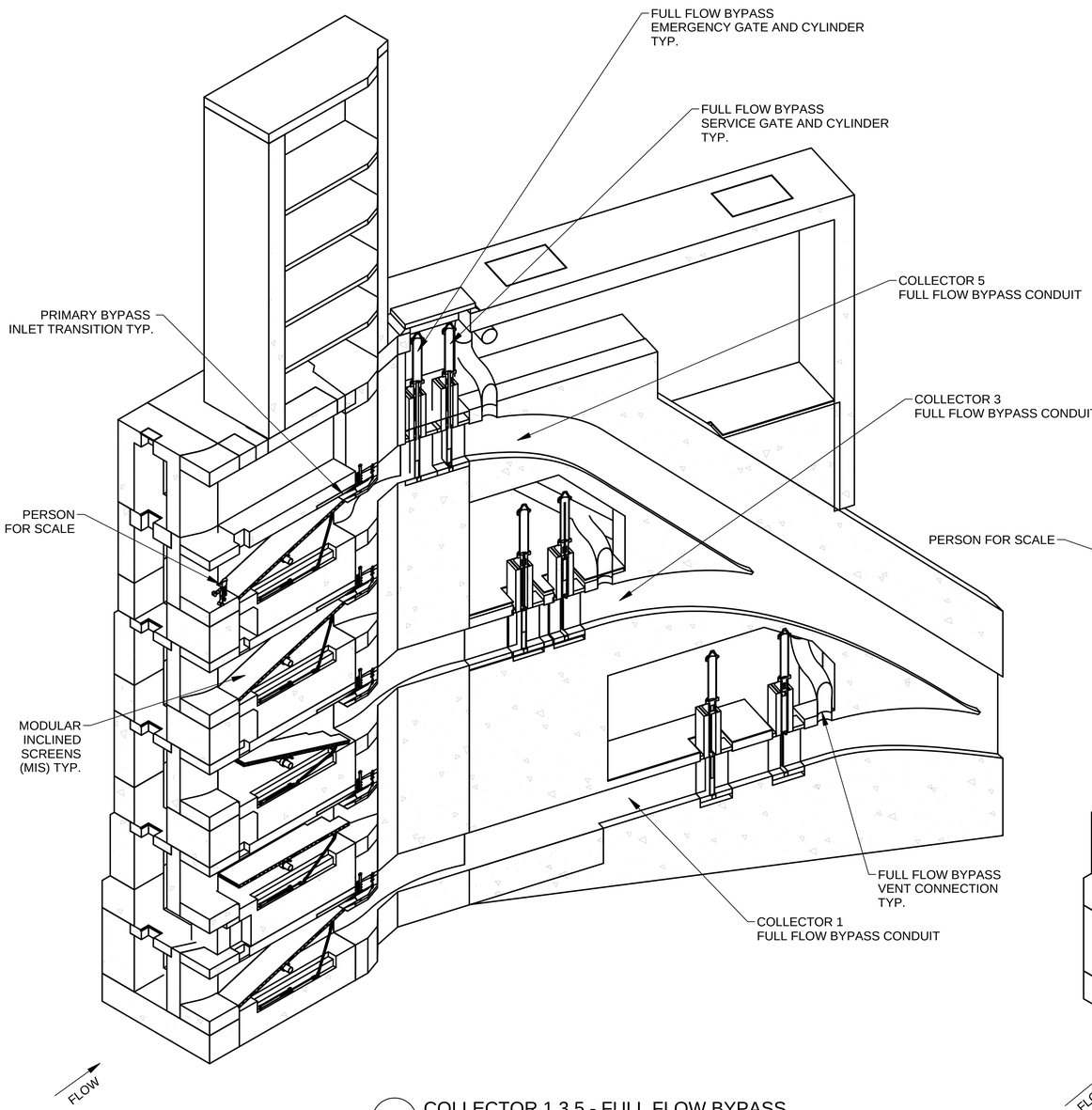

B1 COLLECTOR 1,3,5 - FULL FLOW BYPASS
SCALE: NTS

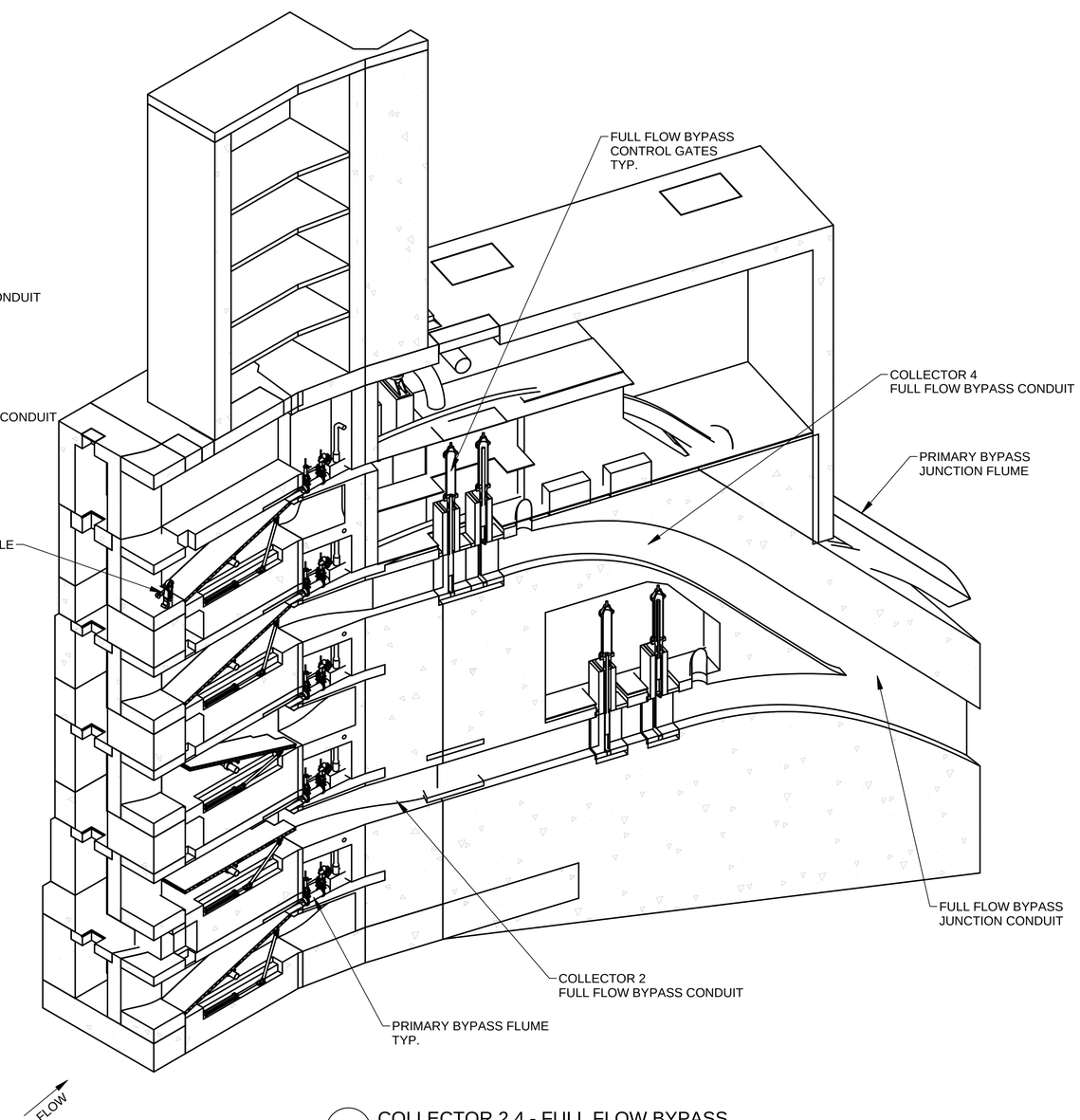

B10 COLLECTOR 2,4 - FULL FLOW BYPASS
SCALE: NTS

US Army Corps of Engineers ®

DATE: 09 NOVEMBER 2021
SOLICITATION NO.:
CONTRACT NO.:
DESIGNED BY: PHIL AUTH P.E.
DRAWN BY: P. AUTH
CHECKED BY:
SUBMITTED BY: KATHERINE LaPONTE
SIZE: ANSI D

U.S. ARMY CORPS OF ENGINEERS
SEATTLE DISTRICT
4735 EAST MARGINAL WAY SOUTH
SEATTLE, WASHINGTON 98134

U.S. ARMY CORPS OF ENGINEERS
WALLA WALLA DISTRICT
201 N 3RD AVE.
WALLA WALLA, WASHINGTON 99362-1876

FY25 P2: 489932 HAHDFPF
HOWARD A. HANSON DAM FISH PASSAGE FACILITY
GREEN RIVER, WASHINGTON

FULL FLOW ISOMETRIC SECTIONS

SHEET ID
G-008

DRAFT FEASIBILITY DESIGN

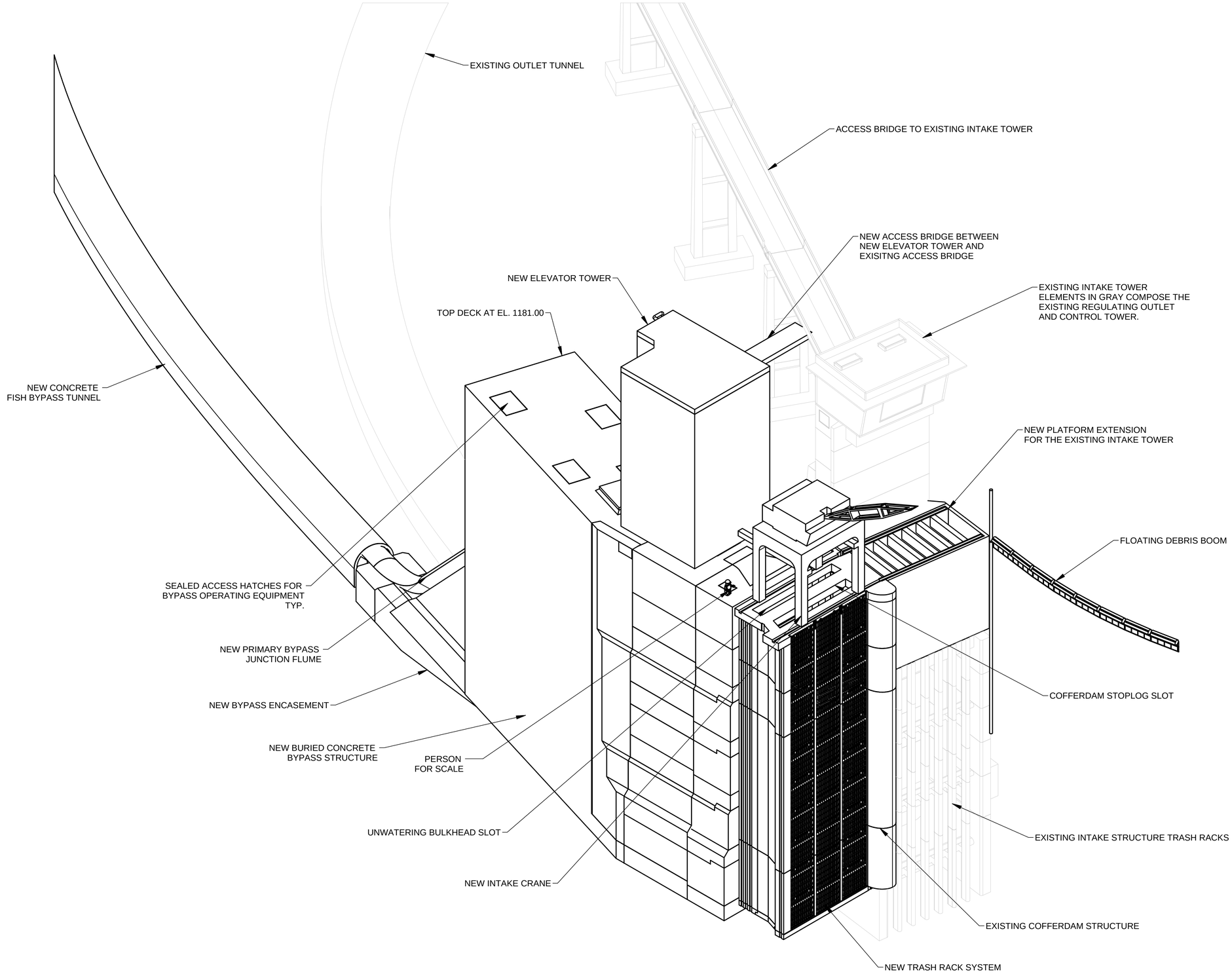

A2 FACILITY BYPASS ISOMETRIC
SCALE: NTS

US Army Corps of Engineers ®

DATE: 09 NOVEMBER 2021
SOLICITATION NO:
CONTRACT NO:

DESIGNED BY: PHIL AUTH P.E.
DRAWN BY: P. AUTH
CHECKED BY:
SUBMITTED BY: KATHERINE LaPONTE
SIZE: ANSI D

U.S. ARMY CORPS OF ENGINEERS
SEATTLE DISTRICT
4735 EAST MARGINAL WAY S SOUTH
SEATTLE, WASHINGTON 98134

U.S. ARMY CORPS OF ENGINEERS
WALLA WALLA DISTRICT
201 N 3RD AVE
WALLA WALLA, WASHINGTON 99362-1876

FY26 P2-489932 HAHDFPF
HOWARD A. HANSON DAM FISH PASSAGE FACILITY
GREEN RIVER, WASHINGTON

FULL FACILITY ISOMETRIC

SHEET ID
G-009

DRAFT FEASIBILITY DESIGN

A1 CONSTRUCTION LIMITS SITE PLAN

SCALE: 1"=200'

US Army Corps of Engineers®

MARK	DESCRIPTION	DATE

DESIGNED BY: KATO
DRAWN BY: KATO
CHECKED BY: SKRINDE
SUBMITTED BY: KATHERINE LaPONTE
SIZE: ANSI D

ISSUE DATE: 09 NOVEMBER 2021
SOLICITATION NO.:
CONTRACT NO.:
FILE NO.: E-S6-14-22

U.S. ARMY CORPS OF ENGINEERS
SEATTLE DISTRICT
SEATTLE, WASHINGTON

FY25 P2-488932-HAHDFPF
HOWARD A HANSON DAM FISH PASSAGE FACILITY
GREEN RIVER, WASHINGTON

CONSTRUCTION LIMITS
SITE PLAN

SHEET ID

G-101

DRAFT FEASIBILITY DESIGN

FILE PATH: pw://PWINT-WPC.EIS.DS.USACE.ARMY.MIL:CENWS - Seattle District/Documents/Civil Works/Howard Hanson Dam, WA/FY25_P2-488932_HAHDFPF/Plan Sets/03_Sheets/Civil/G-101 CONSTRUCTION LIMITS SITE PLAN
PLOT DATE: 12:19:58 PM 2/5/2022

A1 STAGING AREAS SITE PLAN

SCALE: 1"=200'

GENERAL SHEET NOTES

1. ALL WORK SHALL BE AT THE HOWARD A. HANSON DAM (HAHD) THAT IS ABOUT 35 MILES EAST OF TACOMA, WASHINGTON.ACCESS TO THE DAM IS RESTRICTED. THE CONTRACTOR SHALL OBTAIN ALL TRAINING AND COMPLY WITH ALL ACCESS REQUIREMENTS BY THE CITY OF TACOMA AND THE USACE. THE PRIMARY ACCESS ROAD TO THE PROJECT SITE IS A TWO LANE GRAVEL ROAD THAT IS USED BY LOGGING TRUCKS. SNOW, ICE, AND MUD ARE COMMON IN THE WATERSHED DURING THE WINTER AND EARLY SPRING MONTHS.

2. THE CONTRACTOR SHALL COMPLY WITH THE ACCESS ROUTES SHOWN ON THE DRAWINGS. THE CONTRACTOR SHALL NOT ACCESS THE WORK SITE THROUGH THE ADMINISTRATION BUILDING ENTRANCES AT ANY TIME WITHOUT APPROVAL BY THE DAM SITE MANAGER NOR SHALL THE CONTRACTOR PARK ANY VEHICLES AT THE ADMINISTRATION BUILDING.

3. RADIO COMMUNICATION ON CB BANDS FOR ALL VEHICLES IS MANDATORY FOR TRAVEL ALONG THE ACCESS ROAD TO THE DAM. CELL PHONE RECEPTION IS POOR TO NONEXISTENT AT THE PROJECT SITE. SATELLITE PHONES SHALL BE REQUIRED FOR COMMUNICATION WITH THE CONTRACTOR MAIN OFFICE. HANDHELD RADIOS SHALL BE REQUIRED FOR COMMUNICATION BETWEEN CREWS WHILE ON-SITE. LANDLINE TELEPHONES AT THE HAHD PROJECT OFFICE SHALL NOT BE USED BY THE CONTRACTOR EXCEPT IN THE EVENT OF AN EMERGENCY. SATELLITE SERVICE IS LIMITED TO CERTAIN ZONES AROUND THE VICINITY OF THE ADMINISTRATION BUILDING. ALL COMMUNICATION DEVICES SHALL BE TESTED FOR OPERATIONAL ACCESSIBILITY OF SIGNAL INITIALLY AND PERIODICALLY OVER THE COURSE OF THE CONTRACT. THE CONTRACTOR SHALL FURNISH AT LEAST ONE COMPATIBLE COMMUNICATION DEVICE TO THE GOVERNMENT REPRESENTATIVE ON SITE.

4. THE USACE AND CITY OF TACOMA SHALL IDENTIFY A SUITABLE LAY-DOWN, WORK SUPPORT, AND STAGING AREA FOR THE CONTRACTOR AS CLOSE AS POSSIBLE TO THE PROJECT SITE. FOR THIS WORK, IT IS ASSUMED THE CONTRACTOR SHALL BE ABLE TO USE THE SPACE AT THE 3-1/2 MILE SITE. LIMITED SPACE MAY BE AVAILABLE ALONG ACCESS ROAD 'A' (NF 54) NORTH OF THE OLD ADMINISTRATION BUILDING.

5. THE CONTRACTOR SHALL PROVIDE AN OFFICE TRAILER FOR THE WORK CREWS. DUE TO NARROW ROADS AND LIMITED TURNING RADIUS OF THE ROAD, MORE THAN ONE MEDIUM TO SMALL TRAILER MAY BE REQUIRED IN LIEU OF A SINGLE LARGE OFFICE TRAILER.TRAILER SPACE MAY BE AVAILABLE AT THE 3-1/2 MILE SITE. CONTRACTOR SHALL COORDINATE WITH USACE AND CITY OF TACOMA.

6. DUE TO SITE CONSTRAINTS, PARKING SPACE IS LIMITED, DESIGNATED PARKING AREAS NEAR THE WORK SITE SHALL BE RESTRICTED TO NECESSARY VEHICLES ONLY. PARKING IS AVAILABLE AT THE TACOMA HEADWORKS LOT FOR PERSONAL AND NON-ESSENTIAL VEHICLES.

7. THE CONTRACTOR SHALL NOT BLOCK ANY EXISTING GATES OR ACCESS WITHOUT COORDINATING WITH THE USACE COR. ROAD BLOCKAGES SHALL BE MINIMIZED TO REDUCE DISRUPTION TO DAM OPERATIONS AND OTHER CONSTRUCTION PROJECTS AROUND THE DAM. AT LEAST ONE ACCESS ROAD ACROSS THE DAM SHALL REMAIN OPEN AT ALL TIMES.

8. THE CONTRACTOR SHALL BE ABLE TO PROVIDE AND MAINTAIN PORTABLE LIGHT PLANTS WHEREVER CREWS ARE WORKING FOR REQUIRED SAFETY ILLUMINATION THAT SHALL OPERATE FROM DUSK TO DAWN, OR TO THE HOUR THAT WORK IS COMPLETED AT NIGHT. LIGHT PLANTS SHALL BE 6KW MINIMUM OUTPUT WITH LIGHT MAST.

9. BASIC FIRE FIGHTING AND SUPPRESSION EQUIPMENT IS REQUIRED FOR WORK IN FOREST AREAS FOR EACH DRILLING SITE AND VEHICLE. WORK SITE AND THE DISPOSAL SITE.

10. LOCAL VEHICLE PARKING AVAILABLE AS SHOWN.

11. AREA NOTES AS DROP SITE FOR DROPPING OFF MATERIALS TO BE MOVED ON-SITE.

12. AREAS NOTED AS TACOMA WATER IS CONTROLLED BY THE CITY OF TACOMA, AND SHALL BE COORDINATED WITH TACOMA WATER PRIOR TO USAGE.

13. AREAS NOTED AS NO STAGING, NO STAGING ALLOWED.

14. ALL OTHER STAGING AREAS SHALL BE COORDINATED WITH THE DAM OPERATIONS.

15. SEDIMENT RETENTION PONDS REQUIRE RE-HABILITATION AND POSSIBLY RE-CONSTRUCTION.

US Army Corps of Engineers®

MARK	DESCRIPTION	DATE

DESIGNED BY: KATO
DRAWN BY: KATO
CHECKED BY: SKRINDE
SUBMITTED BY: KATHERINE LaPON'E
KATO
ANSLD

ISSUE DATE: 09 NOVEMBER 2021
SOLICITATION NO.:
CONTRACT NO.:
FILE NO.: E-86-14-22

U.S. ARMY CORPS OF ENGINEERS
SEATTLE DISTRICT
SEATTLE, WASHINGTON

FY25 P2-488932-HAHDFPF
HOWARD A HANSON DAM FISH PASSAGE FACILITY
GREEN RIVER, WASHINGTON

STAGING AREAS SITE PLAN

SHEET ID
G-102

DRAFT FEASIBILITY DESIGN

FILE PATH: pw://PWINT-WPC.EIS.DS.USACE.ARMY.MIL:CENWS - Seattle District/Documents/Civil Works/Howard Hanson Dam, WA/FY25_P2-488932_HAHDFPF/Plan Sets/03_Sheets/Civil/G-102 STAGING AREAS SITE PLAN
PLOT DATE: 12:27:29 PM 12/14/2021

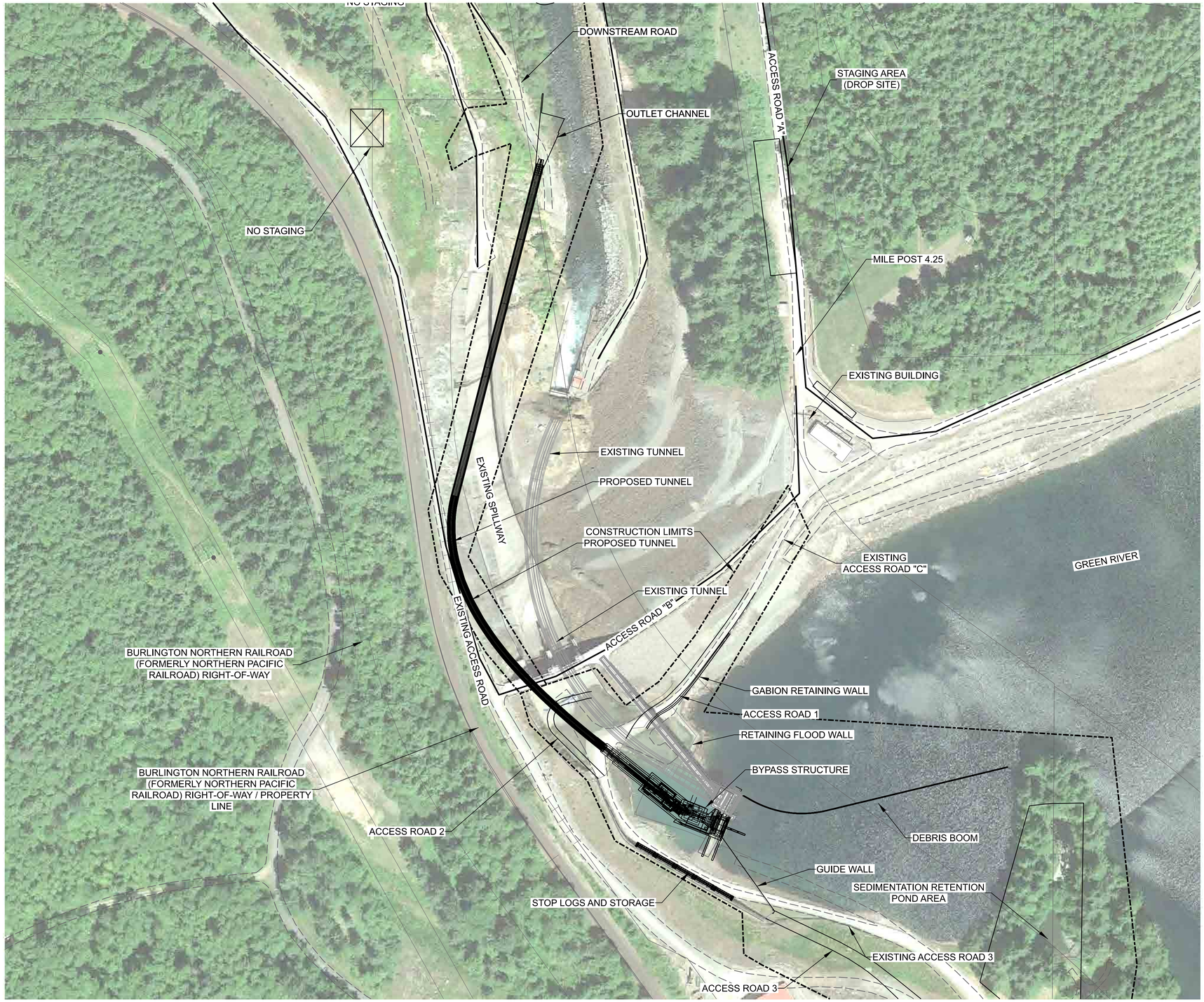

A1 GENERAL SITE PLAN

SCALE: 1"=100'

US Army Corps of Engineers®

MARK	DESCRIPTION	DATE

U.S. ARMY CORPS OF ENGINEERS
SEATTLE DISTRICT
SEATTLE, WASHINGTON

DESIGNED BY: KATO
DRAWN BY: KATO
CHECKED BY: SKRINDE
SUBMITTED BY: KATHERINE LaPONTE
SCALE: ANSI D
ISSUE DATE: 09 NOVEMBER 2021
SOLICITATION NO.:
CONTRACT NO.:
FILE NO.: E-56-14-22

FY25 P2-488932-HAHDFPF
HOWARD A HANSON DAM FISH PASSAGE FACILITY
GREEN RIVER, WASHINGTON

GENERAL SITE PLAN

SHEET ID

G-103

DRAFT FEASIBILITY DESIGN

FILE PATH: ...\...\FY22_P2-474522_DER\...\FY25_P2-488932_HAHDFPF-G-103 GENERAL SITE PLAN.dgn
PLOT DATE: 8:09:44 AM 3/23/2022

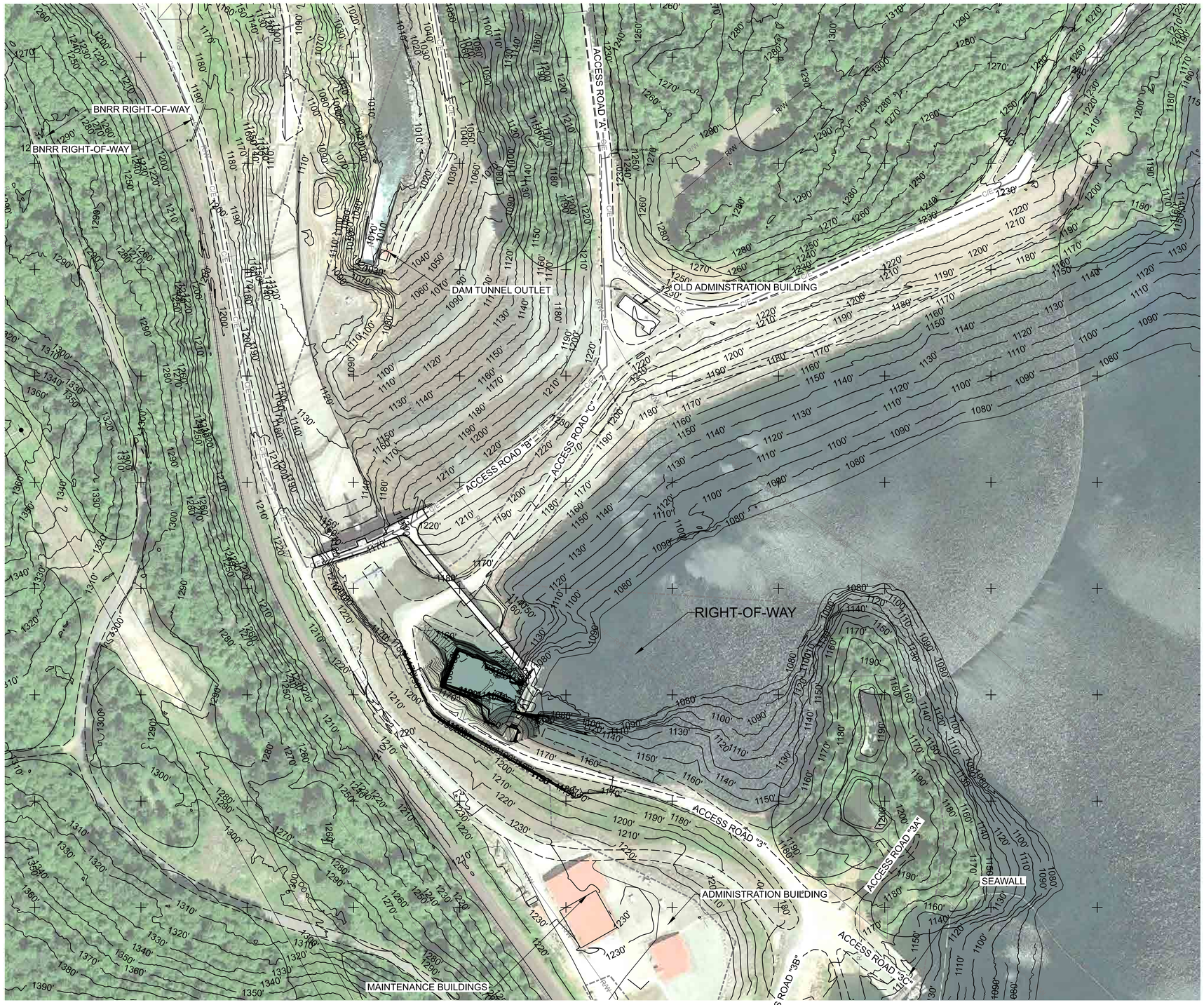

A1 EXISTING SITE CONDITIONS

SCALE: 1"=100'

US Army Corps of Engineers®

MARK	DESCRIPTION	DATE

DESIGNED BY: KATO
DRAWN BY: KATO
CHECKED BY: SKRINDE
SUBMITTED BY: KATHERINE LaPONTE
SIZE: ANSI D
ISSUE DATE: 09 NOVEMBER 2021
SOLICITATION NO.:
CONTRACT NO.:
FILE NO.: E-36-14-22

U.S. ARMY CORPS OF ENGINEERS
SEATTLE DISTRICT
SEATTLE, WASHINGTON

FY25 P2-488932-HAHDFPF
HOWARD A HANSON DAM FISH PASSAGE FACILITY
GREEN RIVER, WASHINGTON

EXISTING SITE CONDITIONS
SITE PLAN

SHEET ID
G-104

DRAFT FEASIBILITY DESIGN

FILE PATH: pw://PWINT-WPC.EIS.DS.USACE.ARMY.MIL:CENWS - Seattle District/Documents/Civil Works/Howard Hanson Dam, WA/FY25_P2-488932_HAHDFPF/Plan Sets/03_Sheets/Civil/G-104 EXISTING SITE CONDITIONS SITE PLAN
PLOT DATE: 12:42:29 PM 2/5/2022

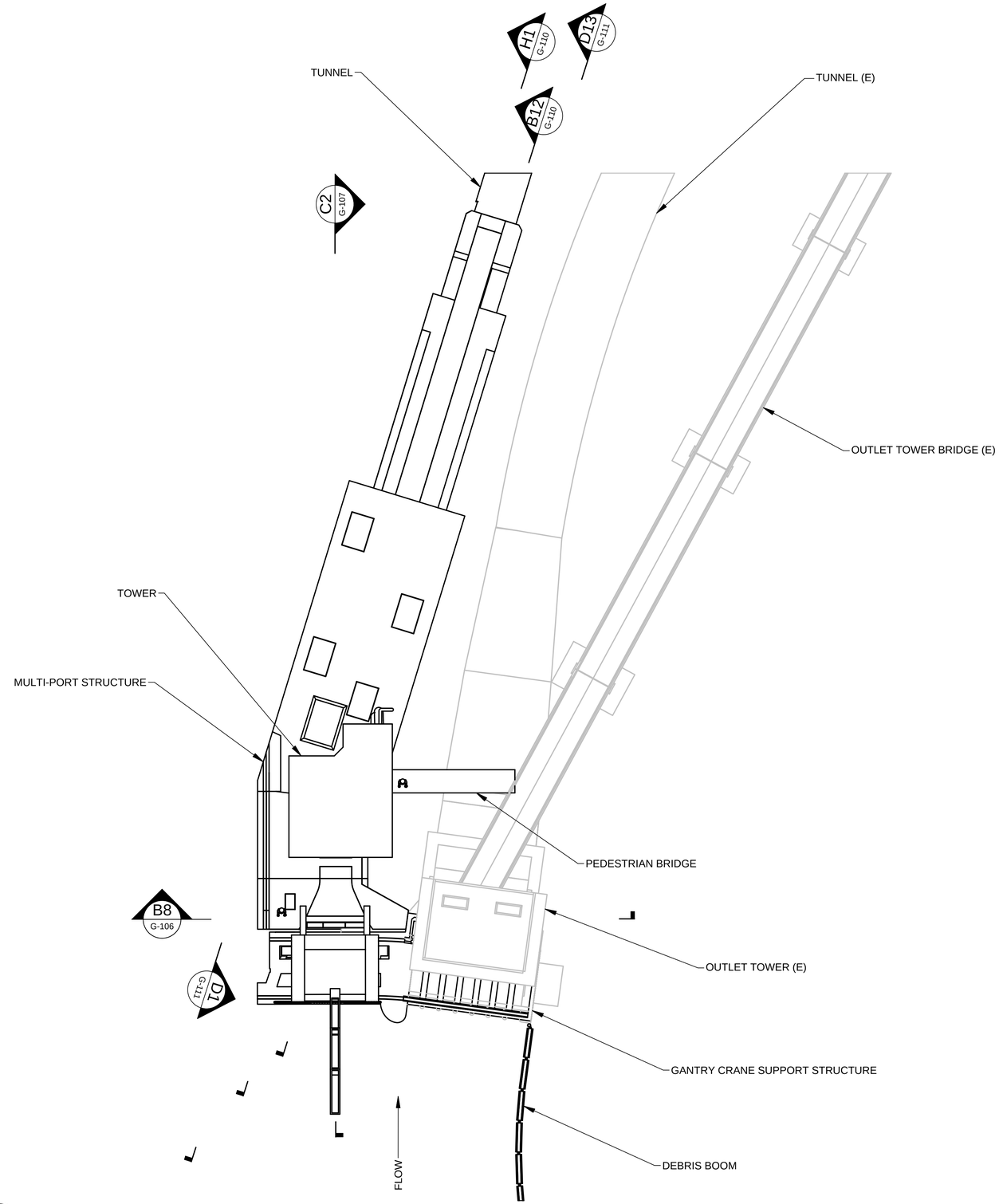

C7 FACILITY PLAN VIEW
SCALE: NTS

US Army Corps of Engineers ®

DATE: 24NOV21
SOLICITATION NO:
CONTRACT NO:

DESIGNED BY: BEN FILAN P.E.
DRAWN BY: G2EC08JF
CHECKED BY:
SUBMITTED BY: KATHERINE LaPONTE
SIZE: ANSI D

U.S. ARMY CORPS OF ENGINEERS
SEATTLE DISTRICT
4735 EAST MARGINAL WAY S SOUTH
SEATTLE, WASHINGTON 98134

U.S. ARMY CORPS OF ENGINEERS
PORTLAND DISTRICT
333 SW 1ST AVE.
PORTLAND, OREGON 97204-3495

FY25 P2-489932 HAHDFPF
HOWARD A. HANSON DAM FISH PASSAGE FACILITY
GREEN RIVER, WASHINGTON

GENERAL
SITE PLAN

SHEET ID
G-105

DRAFT FEASIBILITY DESIGN

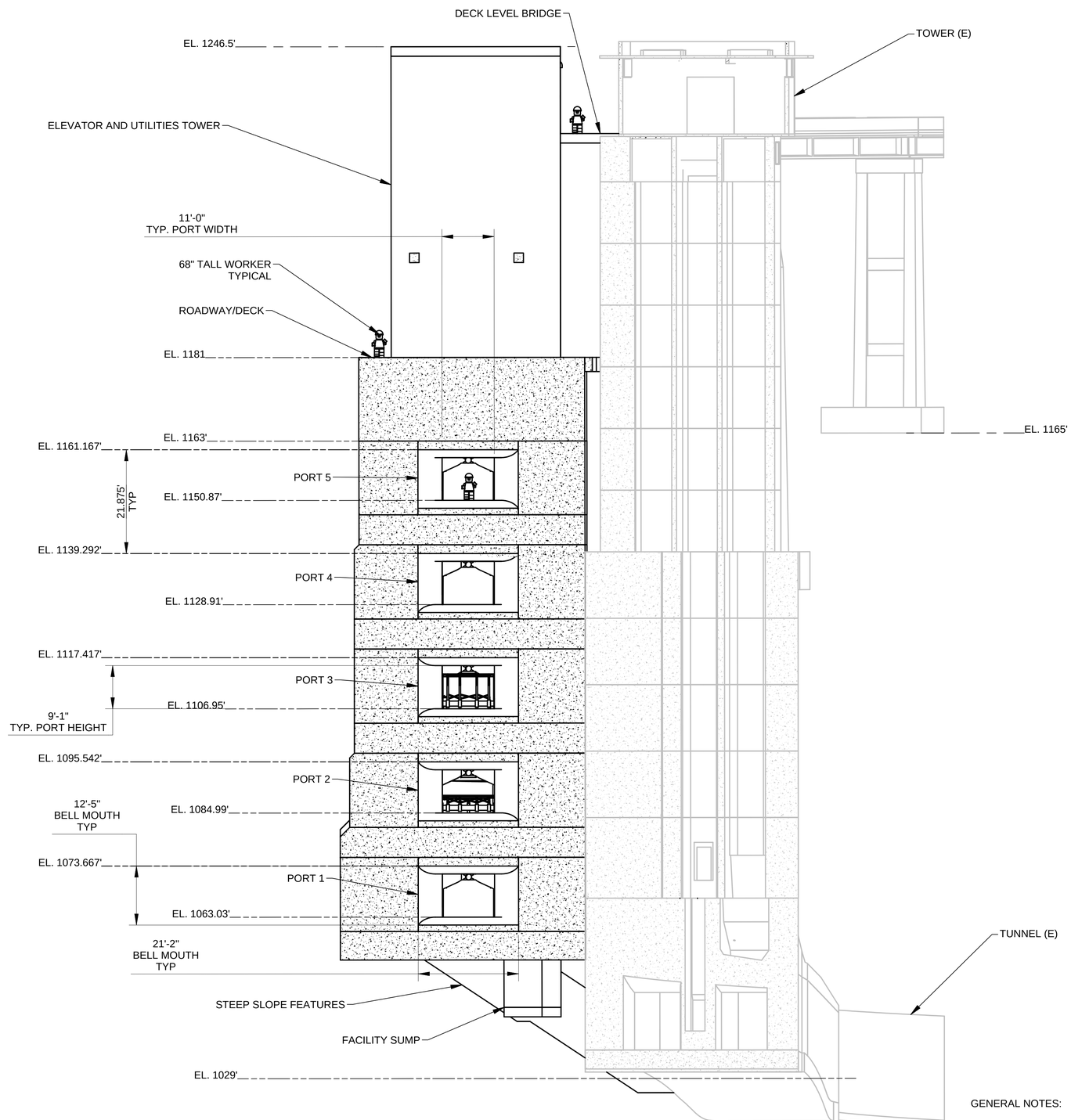

B8 MULTI-PORT COLLECTOR
SCALE: NTS

GENERAL NOTES:

1. REFERENCE 95% PLANS FOR COMPLEMENTARY INFORMATION.

2. TOPOGRAPHY AND EXCAVATION NOT SHOWN.

3. COLLECTOR PORT STRUCTURE REUSED FROM 95% DESIGN. NEW DESIGN FEATURES HAVE BEEN INTEGRATED TO ENSURE PORT SHAPE IS UNCHANGED.

4. PORT DISCHARGE IS MODIFIED TO INCLUDE STEEP SLOPE BYPASS GEOMETRIES.

US Army Corps of Engineers ®

DATE: 24NOV21
SOLICITATION NO:
CONTRACT NO:
DESIGNED BY: BEN FILAN P.E.
DRAWN BY: CZECDUJF
CHECKED BY:
SUBMITTED BY: KATHERINE LaPONTE
SIZE: ANSI D

U.S. ARMY CORPS OF ENGINEERS
SEATTLE DISTRICT
4735 EAST MARGINAL WAY SOUTH
SEATTLE, WASHINGTON 98134

U.S. ARMY CORPS OF ENGINEERS
PORTLAND DISTRICT
333 SW 1ST AVE.
PORTLAND, OREGON 97204-3495

FY25 P2 489932 HAHDFPF
HOWARD A. HANSON DAM FISH PASSAGE FACILITY
GREEN RIVER, WASHINGTON

INLET ELEVATIONS

SHEET ID

G-106

DRAFT FEASIBILITY DESIGN

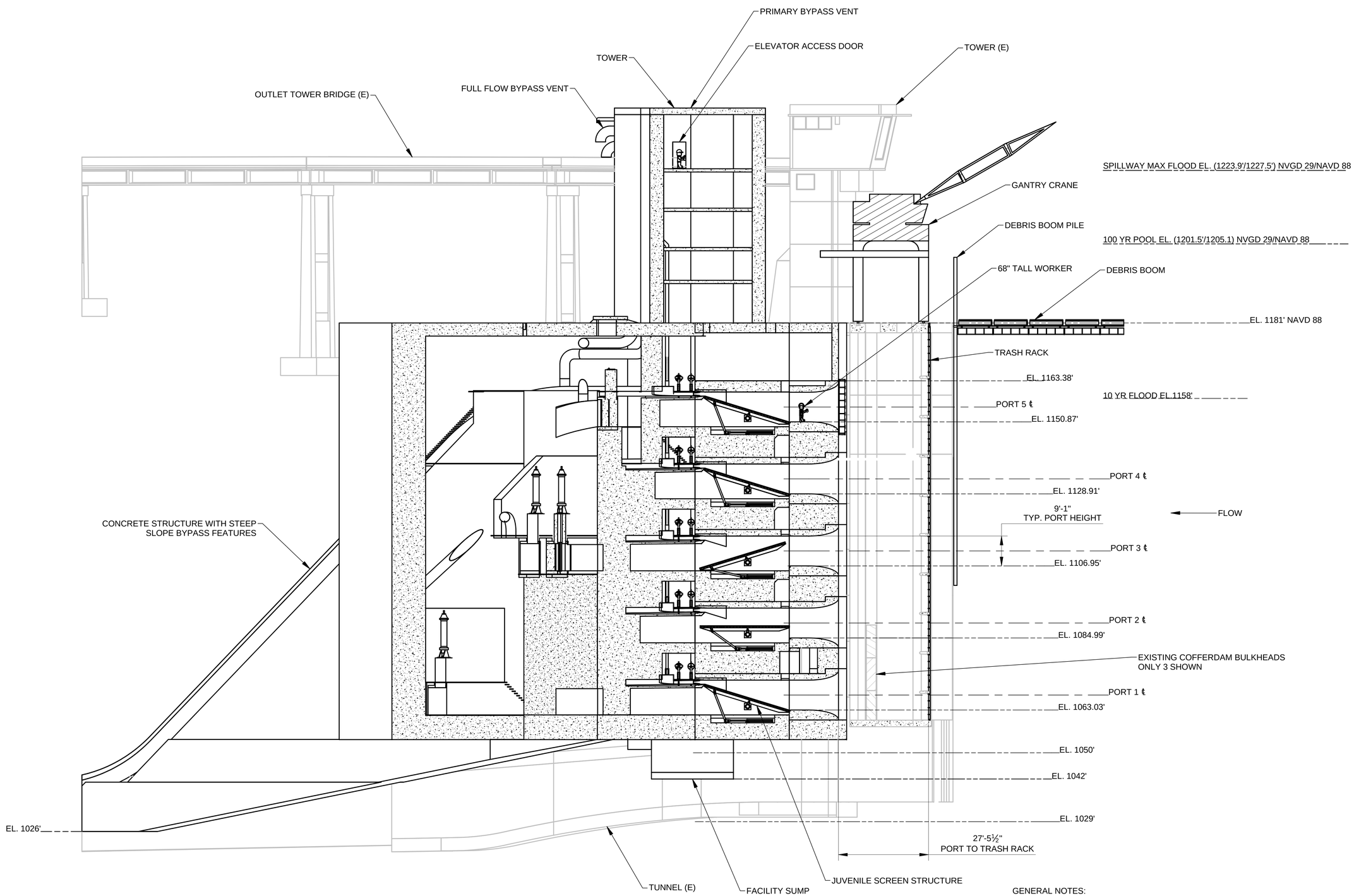

C2 MULTI-PORT COLLECTOR-SECTION VIEW
SCALE: NTS

GENERAL NOTES:

1. REFERENCE 95% PLANS FOR COMPLEMENTARY INFORMATION.

2. TOPOGRAPHY AND EXCAVATION NOT SHOWN.

3. COLLECTOR PORT STRUCTURE REUSED FROM 95% DESIGN. NEW DESIGN FEATURES HAVE BEEN INTEGRATED TO ENSURE PORT SHAPE IS UNCHANGED.

4. PORT DISCHARGE IS MODIFIED TO INCLUDE STEEP SLOPE BYPASS GEOMETRIES.

US Army Corps of Engineers ®

DATE: 24NOV21
SOLICITATION NO:
CONTRACT NO:

DESIGNED BY: BEN FILAN P.E.
DRAWN BY: CZECOBLIF
CHECKED BY:
SUBMITTED BY: KATHERINE LaPONTE
SIZE: ANSI D

U.S. ARMY CORPS OF ENGINEERS
SEATTLE DISTRICT
4735 EAST MARGINAL WAY SOUTH
SEATTLE, WASHINGTON 98134

U.S. ARMY CORPS OF ENGINEERS
PORTLAND DISTRICT
333 SW 1ST AVE
PORTLAND, OREGON 97204-3495

FY25 P2.489932 HAHDFPF
HOWARD A. HANSON DAM FISH PASSAGE FACILITY
GREEN RIVER, WASHINGTON

CENTERLINE OF COLLECTOR
SECTION VIEW

SHEET ID
G-107

DRAFT FEASIBILITY DESIGN

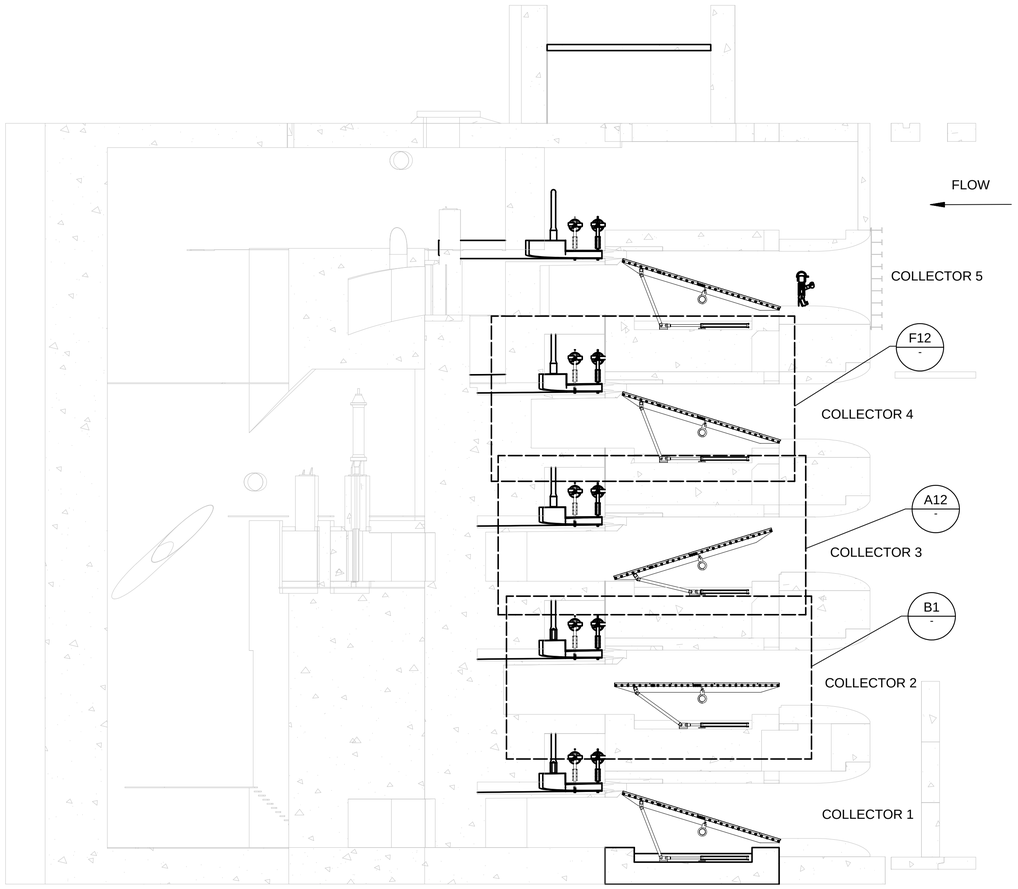

G1 PRIMARY BYPASS CENTERLINE SECTION
SCALE: 1:150

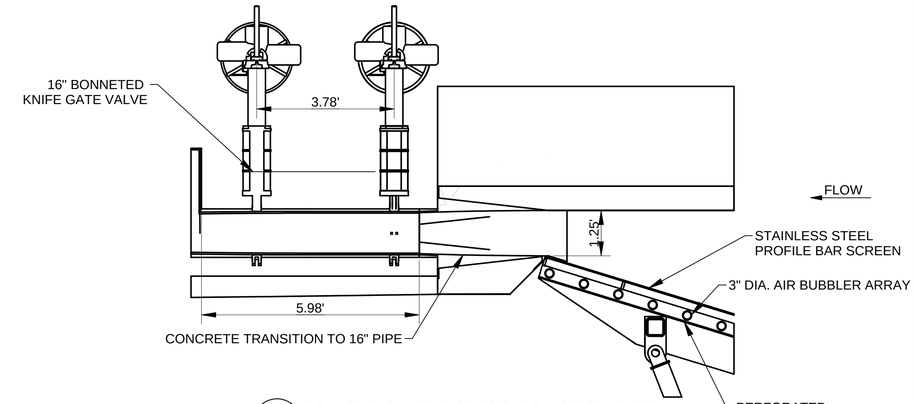

M14 IFS SCREEN - BYPASS TRANSITION
SCALE: 1:25

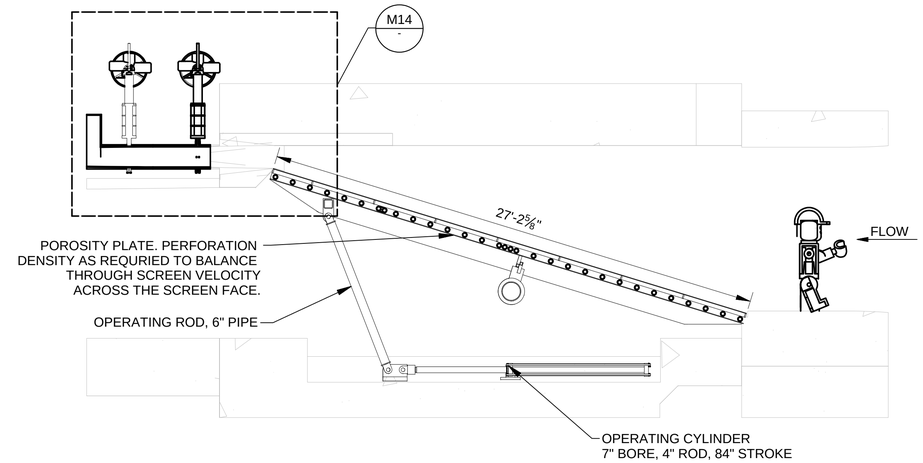

F12 IFS SCREEN - FISHING POSITION
SCALE: 1:50

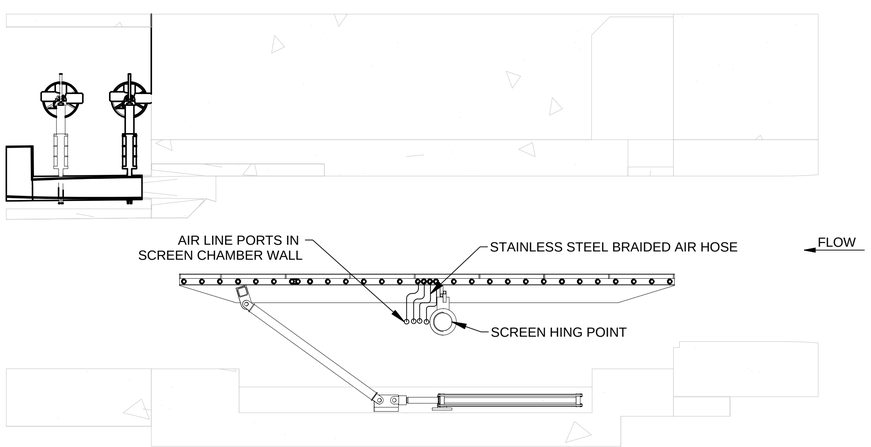

B1 IFS SCREEN - EMERGENCY BYPASS POSITION
SCALE: 1:50

NOTE: LINEWORK SHOWN IN GRAY REPRESENTS
GEOMETRY DESCRIBED ELSEWHERE IN THIS SET.

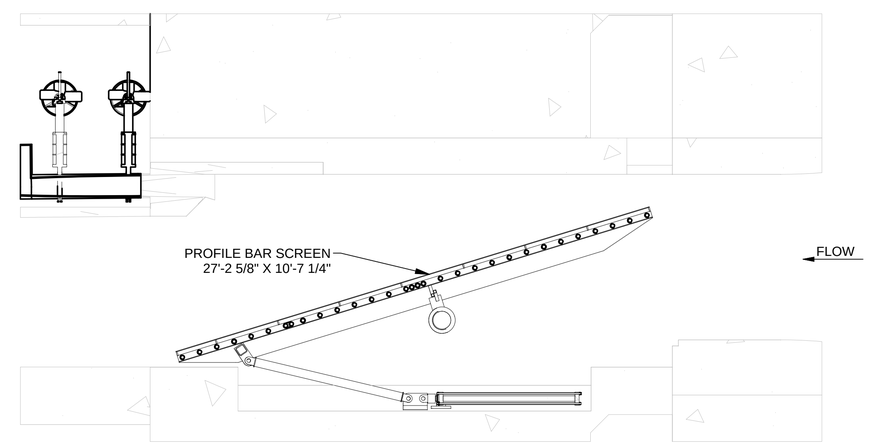

A12 IFS SCREEN - BACKFLUSH POSITION
SCALE: 1:50

US Army Corps of Engineers ®

DESIGNED BY: PHIL AUTH P.E.
DATE: 09 NOVEMBER 2021
DRAWN BY: P. AUTH
SOLICITATION NO:
CHECKED BY:
CONTRACT NO:
SUBMITTED BY: KATHERINE LaPONTE
SIZE: ANSI D

U.S. ARMY CORPS OF ENGINEERS
SEATTLE DISTRICT
4735 EAST MARGINAL WAY SOUTH
SEATTLE, WASHINGTON 98134

U.S. ARMY CORPS OF ENGINEERS
WALLA WALLA DISTRICT
201 N 3RD AVE
WALLA WALLA, WASHINGTON 99362-1876

FY25 P2-489932 HAHDFPF
HOWARD A. HANSON DAM FISH PASSAGE FACILITY
GREEN RIVER, WASHINGTON

ENLARGED SECTION OF MIS/HORN

SHEET ID
G-108

DRAFT FEASIBILITY DESIGN

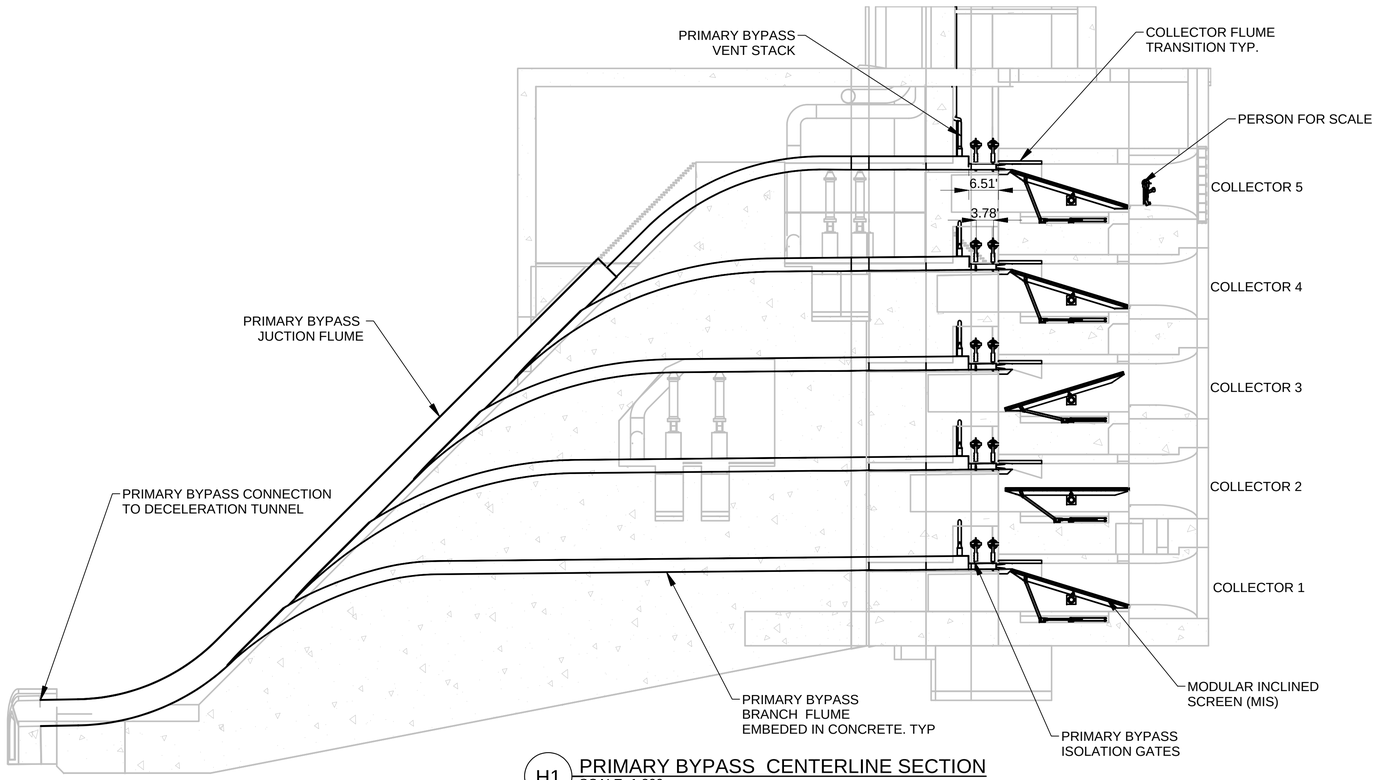

H1 PRIMARY BYPASS CENTERLINE SECTION
SCALE: 1:200

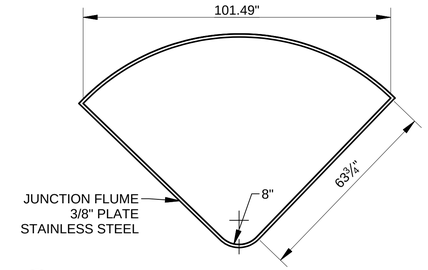

M14 BYPASS JUNCTION FLUME SECTION
SCALE: 1:25

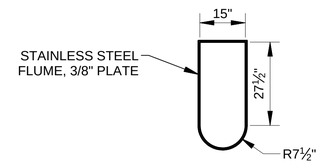

J14 BYPASS FLUME SECTION
SCALE: 1:25

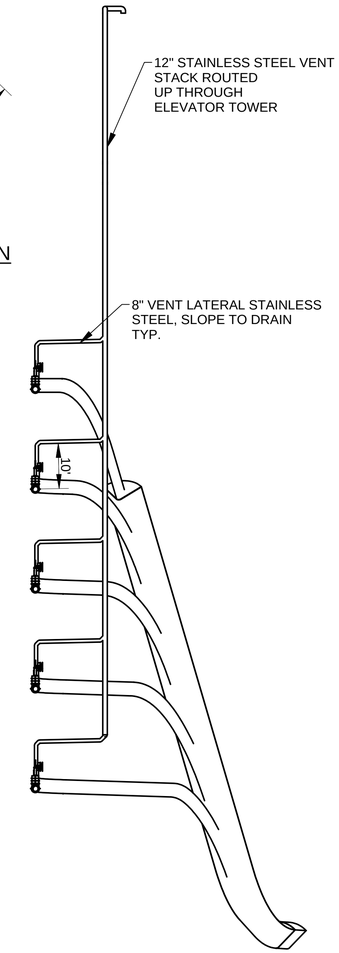

E14 PRIMARY BYPASS VENT ELEVATION
SCALE: 1:200

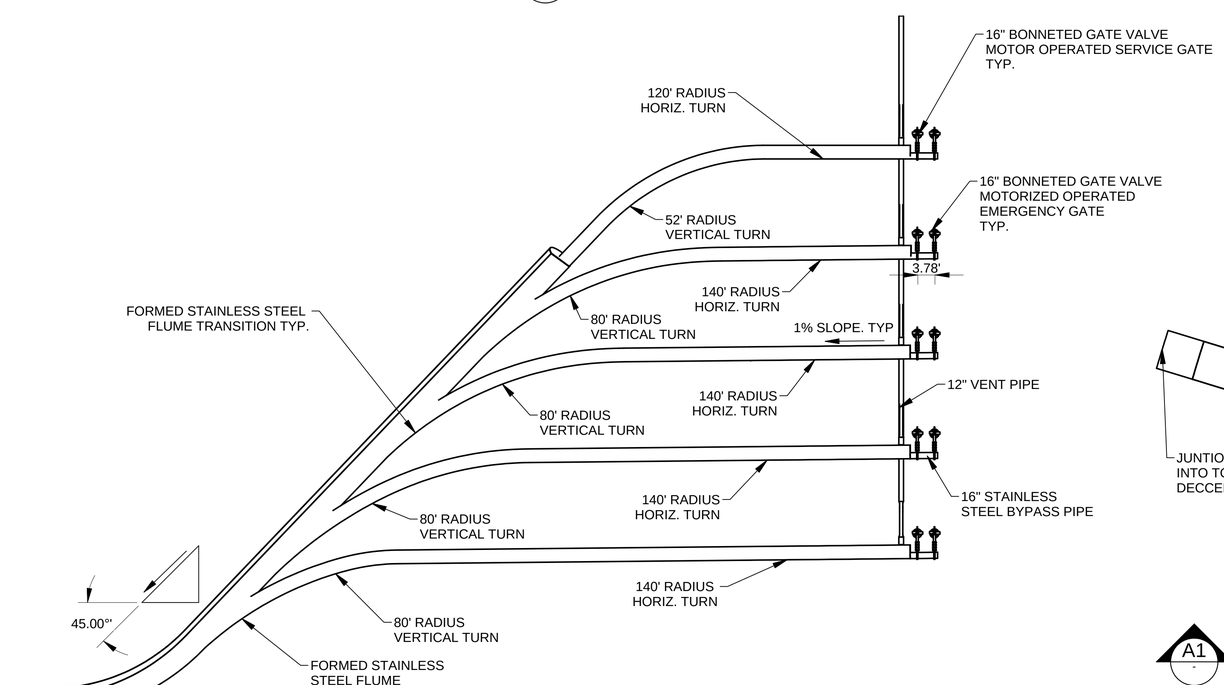

A1 PRIMARY BYPASS ELEVATION
SCALE: 1:200

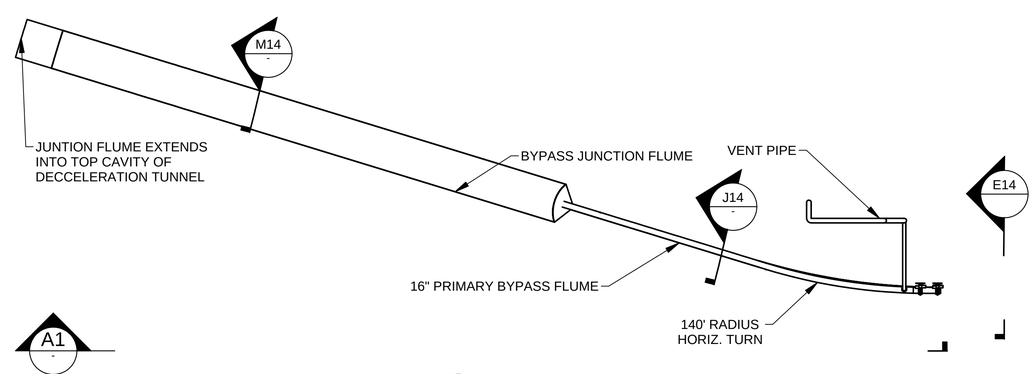

B11 PRIMARY BYPASS PLAN
SCALE: 1:200

US Army Corps of Engineers ®

DATE: 09 NOVEMBER 2021	
SOLICITATION NO.:	
CONTRACT NO.:	
DESIGNED BY: PHIL AUTH, P.E.	
DRAWN BY: P. AUTH	
CHECKED BY:	
SUBMITTED BY: KATHERINE LaPONTE	
SIZE: ANSI D	

U.S. ARMY CORPS OF ENGINEERS
SEATTLE DISTRICT
4735 EAST MARGINAL WAY SOUTH
SEATTLE, WASHINGTON 98134

U.S. ARMY CORPS OF ENGINEERS
WALLA WALLA DISTRICT
201 N 3RD AVE
WALLA WALLA, WASHINGTON 99362-1876

FY26 P2-489932 HAHDFPF
HOWARD A. HANSON DAM FISH PASSAGE FACILITY
GREEN RIVER, WASHINGTON

CENTERLINE OF PRIMARY BYPASS

SHEET ID
G-109

DRAFT FEASIBILITY DESIGN

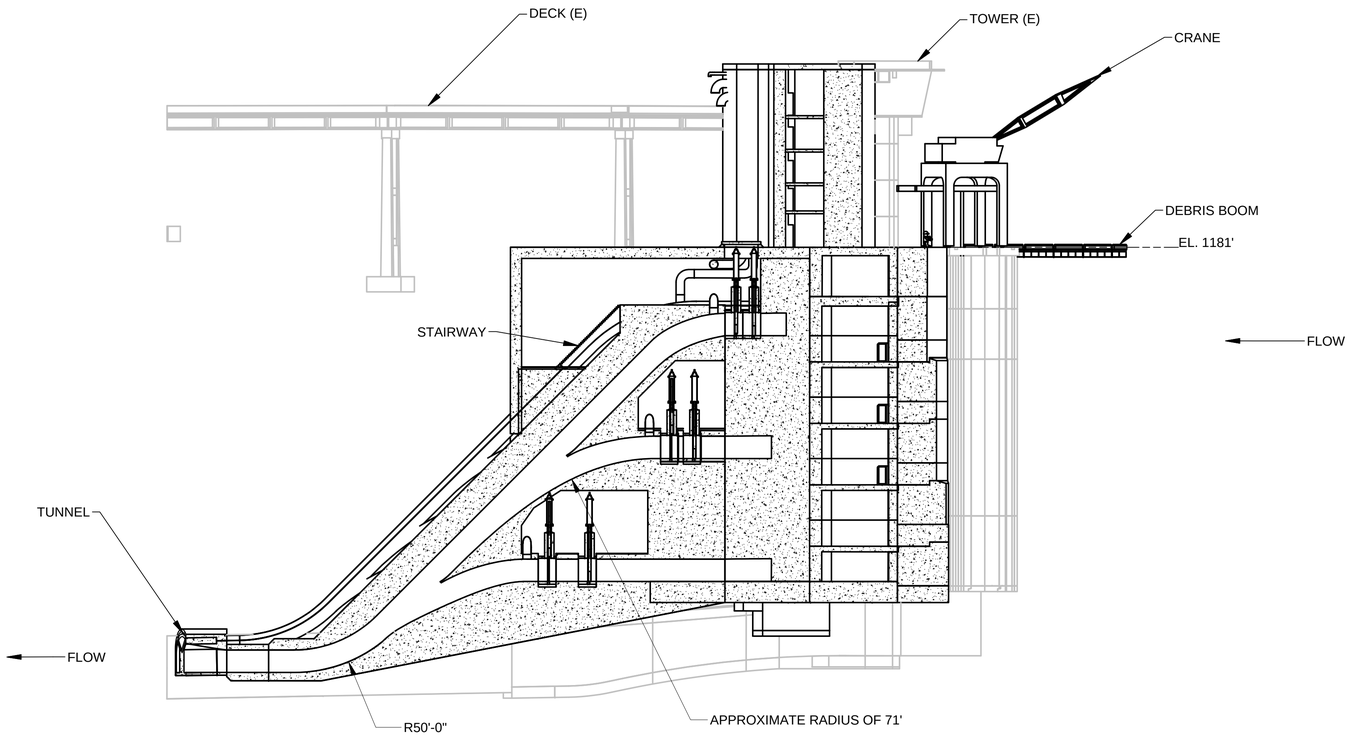

H1 BYPASS PORTS 5/3/1 SECTION VIEW
SCALE: NTS

GENERAL NOTES:

1. REFERENCE 95% PLANS FOR COMPLEMENTARY INFORMATION.

2. TOPOGRAPHY AND EXCAVATION NOT SHOWN.

3. COLLECTOR PORT STRUCTURE REUSED FROM 95% DESIGN. NEW DESIGN FEATURES HAVE BEEN INTEGRATED TO ENSURE PORT SHAPE IS UNCHANGED.

4. PORT DISCHARGE IS MODIFIED TO INCLUDE STEEP SLOPE BYPASS GEOMETRIES.

5. CONCRETE STRUCTURE DIMENSIONS ARE SHOWN FOR SCALING AND FEASIBILITY ASSESSMENT ONLY.

6. REGULATING GATE SIZING TAKEN FROM BLUE RIVER DAM. CONDUIT SIZE IS SIMILAR AND RATED OPERATING HEAD EXCEEDS OPERATING HEAD REQUIRED AT THIS LOCATION.

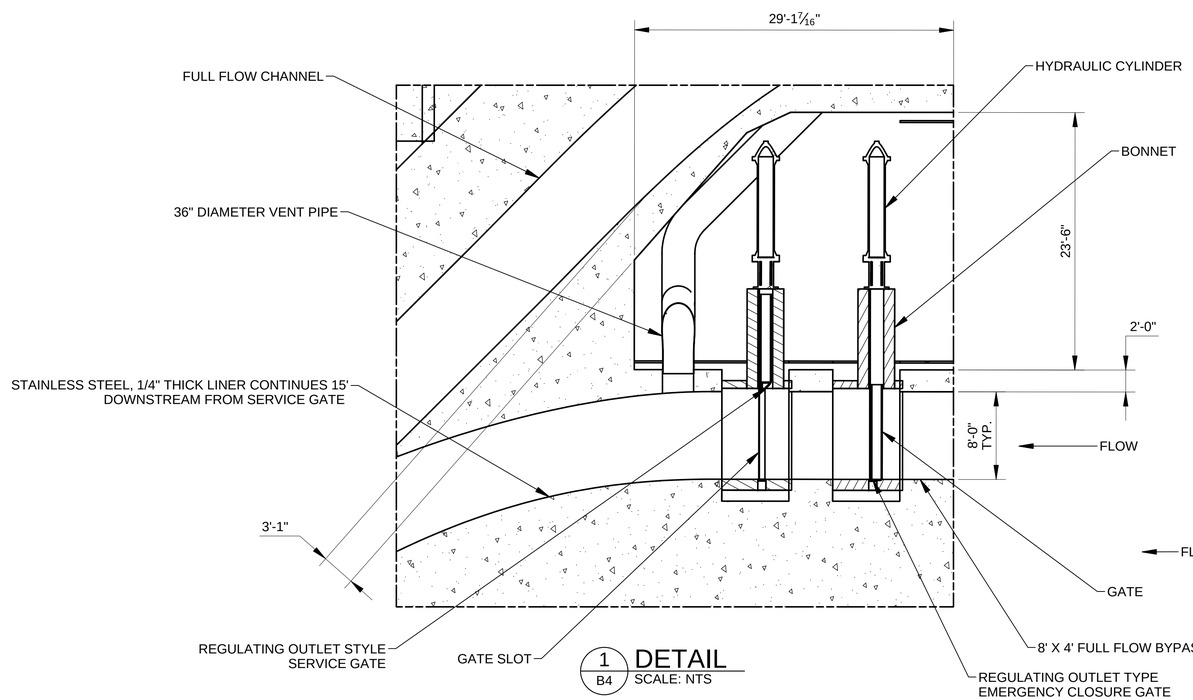

1 / B4 DETAIL
SCALE: NTS

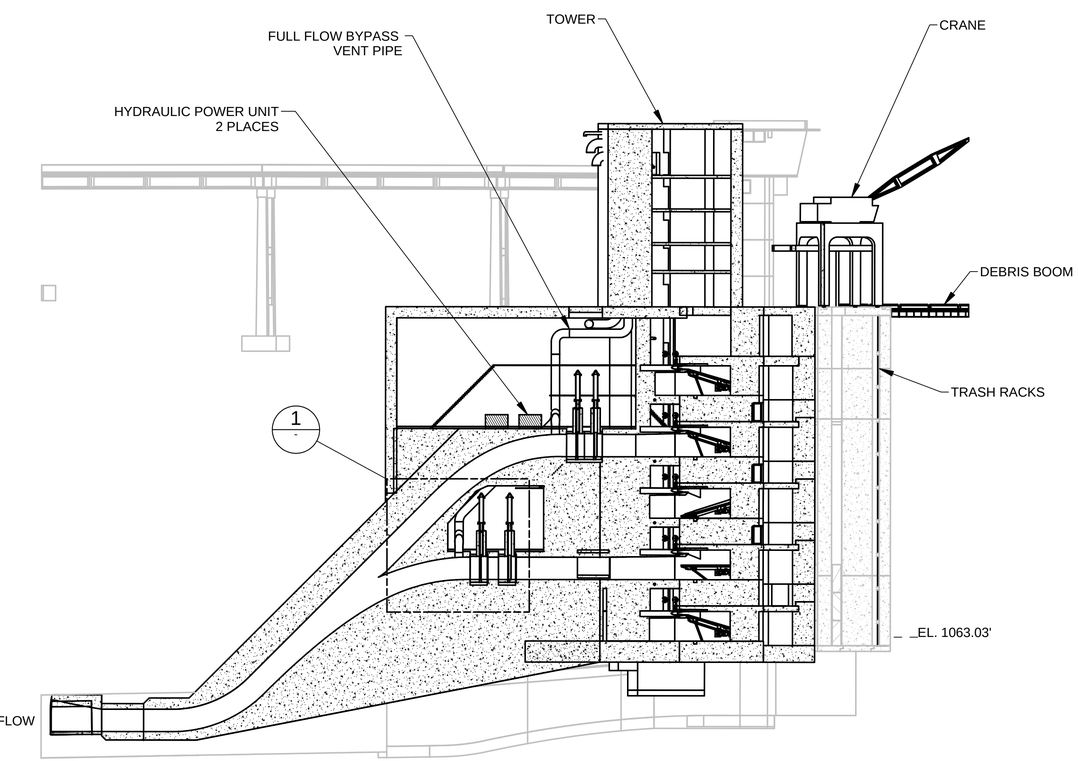

B12 BYPASS PORTS 4/2 SECTION VIEW
SCALE: NTS

US Army Corps of Engineers ®

DATE: 24NOV21
SOLICITATION NO:
CONTRACT NO:
DESIGNED BY: BEN FILAN P.E.
DRAWN BY: GZECOBJF
CHECKED BY:
SUBMITTED BY: KATHERINE LIPONTE
SIZE: ANSI D

U.S. ARMY CORPS OF ENGINEERS
SEATTLE DISTRICT
4735 EAST MARGINAL WAY SOUTH
SEATTLE, WASHINGTON 98134

U.S. ARMY CORPS OF ENGINEERS
PORTLAND DISTRICT
333 SW 1ST AVE.
PORTLAND, OREGON 97204-3495

FY25 P2-489832 HAHDFPF
HOWARD A. HANSON DAM FISH PASSAGE FACILITY
GREEN RIVER, WASHINGTON

CENTERLINE OF FULL FLOW BYPASS

SHEET ID

G-110

DRAFT FEASIBILITY DESIGN

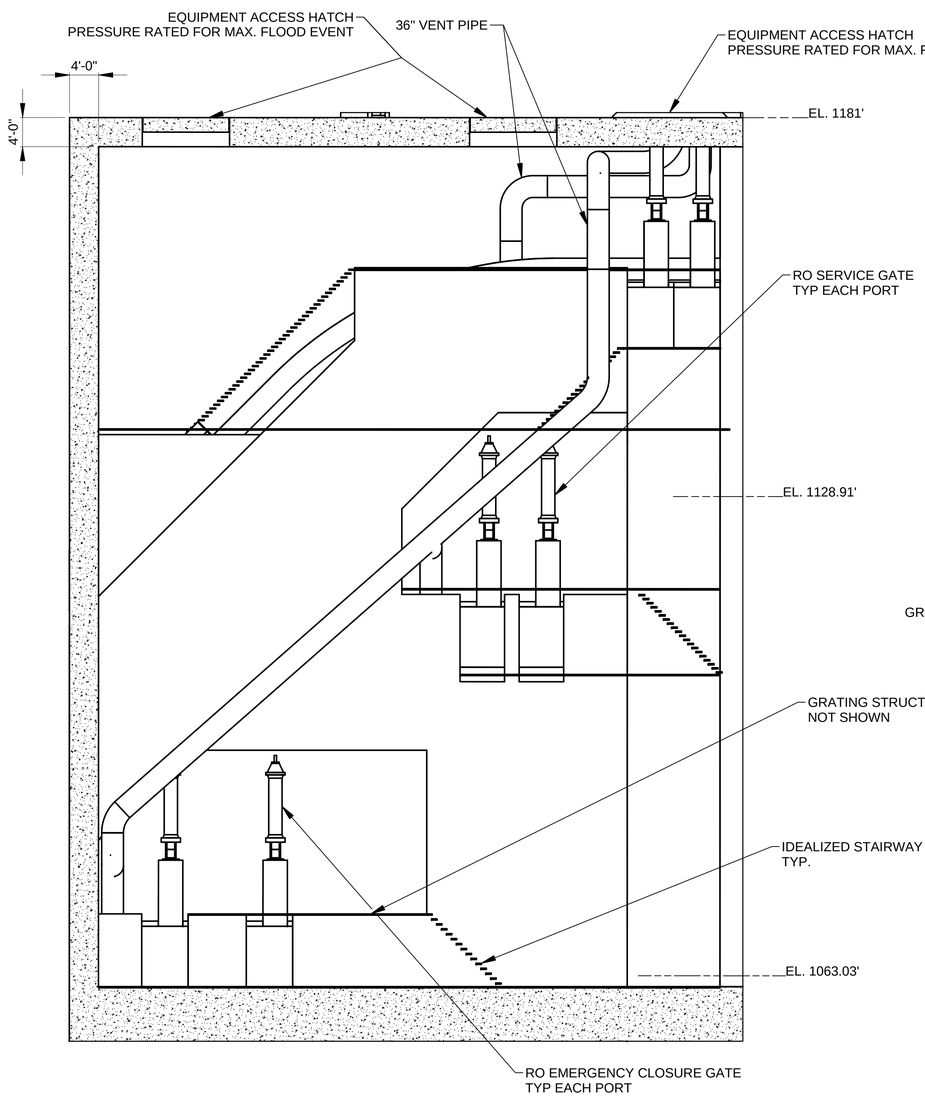

D1 BYPASS ACCESS SECTION VIEW - WEST
SCALE: NTS

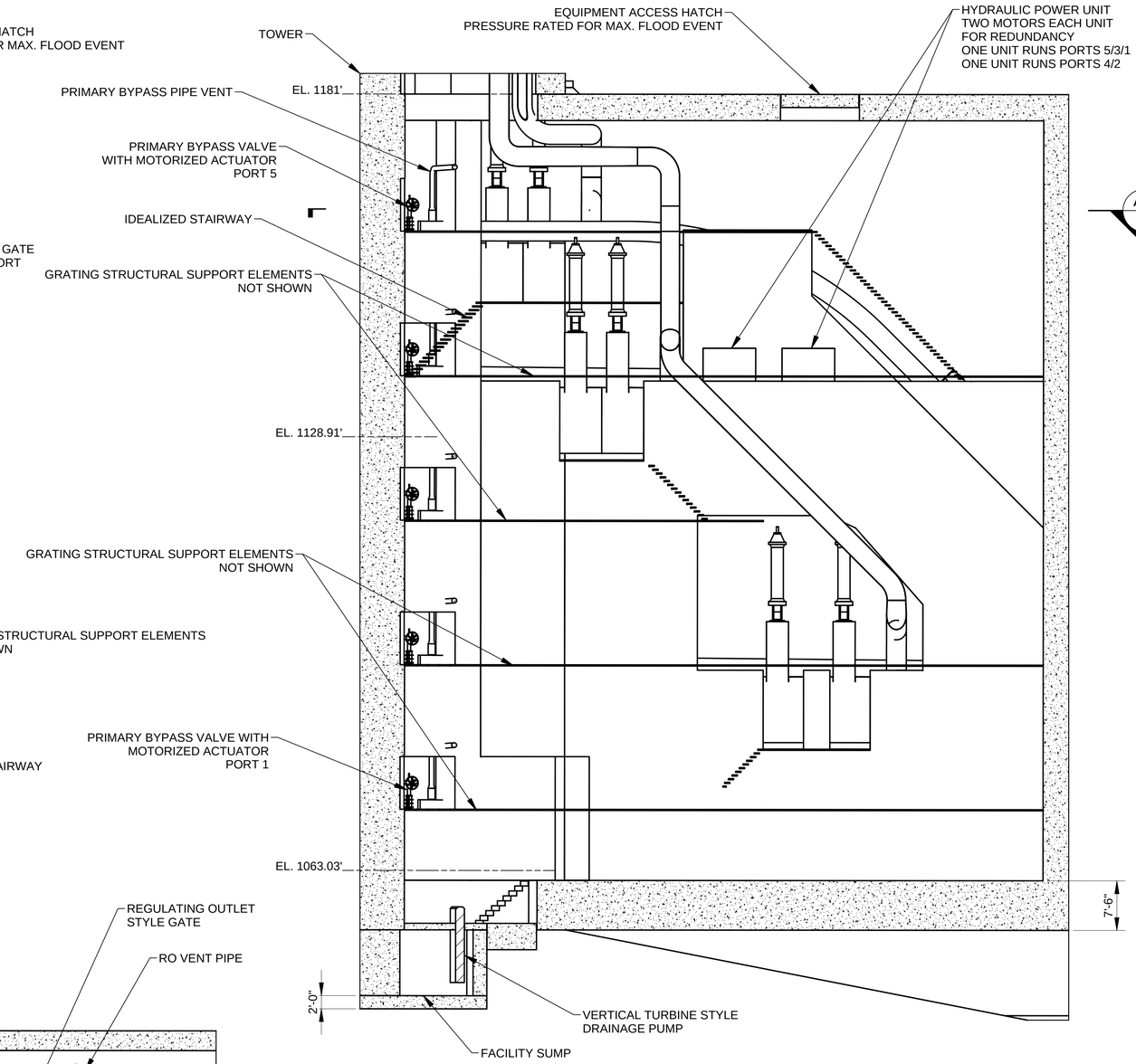

D13 BYPASS ACCESS SECTION VIEW - EAST
SCALE: NTS

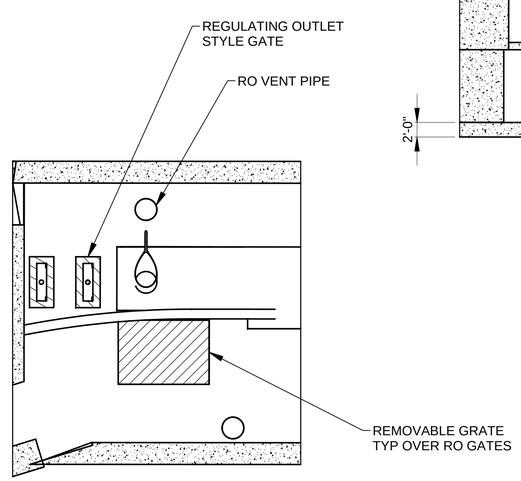

A9 RO ACCESS DETAIL
SCALE: NTS

GENERAL NOTES:

1. STAIRS SHOWN TO PROVIDE MAINTANENCE ACCESS ONLY. EMERGENCY EGRESS REQUIREMENTS TO BE ADDRESSED SEPARATELY.

2. REFERENCE 95% PLANS FOR COMPLEMENTARY INFORMATION.

3. TOPOGRAPHY AND EXCAVATION NOT SHOWN.

4. COLLECTOR PORT STRUCTURE REUSED FROM 95% DESIGN. NEW DESIGN FEATURES HAVE BEEN INTEGRATED TO ENSURE PORT SHAPE IS UNCHANGED.

5. PORT DISCHARGE IS MODIFIED TO INCLUDE STEEP SLOPE BYPASS GEOMETRIES.

6. VARIOUS CONCRETE THICKNESS DIMENSIONS SHOWN FOR SCALE AND FEASIBILITY ONLY.

US Army Corps of Engineers ®

DATE: 24NOV21
SOLICITATION NO:
CONTRACT NO:
DESIGNED BY: ISABEL KALNIN
DRAWN BY: CZELCDMK
CHECKED BY:
SUBMITTED BY: KATHERINE LaPONTE
SIZE: ANSI D

U.S. ARMY CORPS OF ENGINEERS
SEATTLE DISTRICT
4735 EAST MARGINAL WAY SOUTH
SEATTLE, WASHINGTON 98134

U.S. ARMY CORPS OF ENGINEERS
PORTLAND DISTRICT
333 SW 1ST AVE.
PORTLAND, OREGON 97204-3495

FY26 P2-489932 HAHDFPF
HOWARD A. HANSON DAM FISH PASSAGE FACILITY
GREEN RIVER, WASHINGTON

SECTION CUT ALONG BYPASS CONDUIT

SHEET ID
G-111

DRAFT FEASIBILITY DESIGN

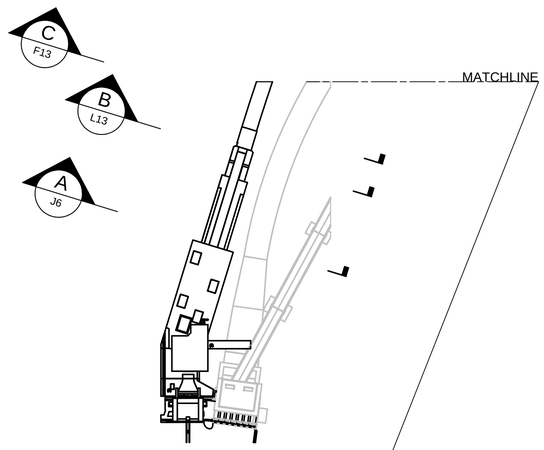

K2 MULTI-PORT COLLECTOR
SCALE: NTS

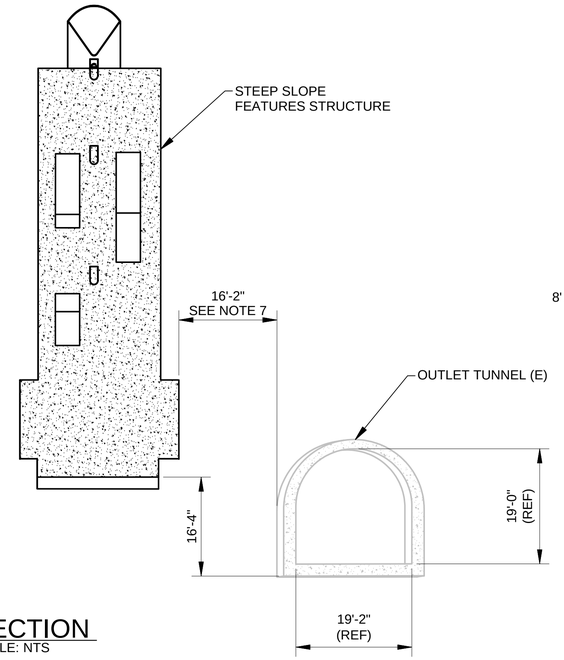

A J6 SECTION
SCALE: NTS

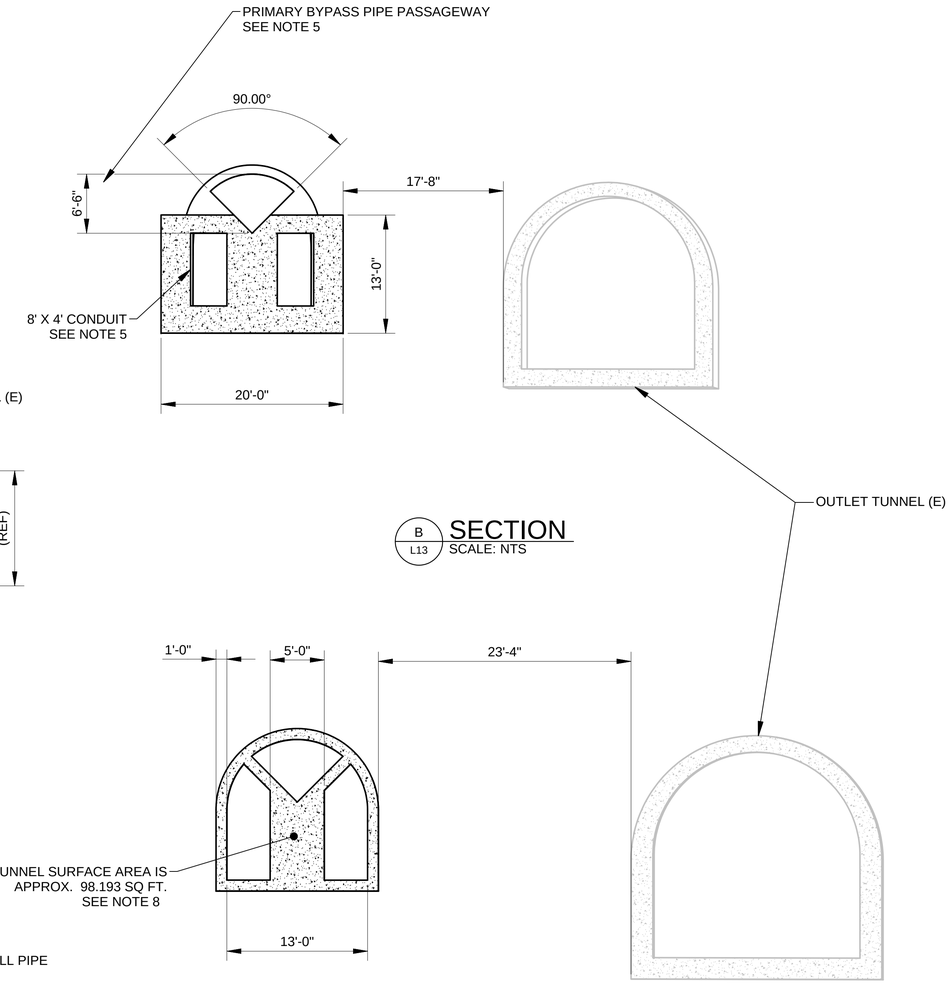

B L13 SECTION
SCALE: NTS

C F13 SECTION
SCALE: NTS

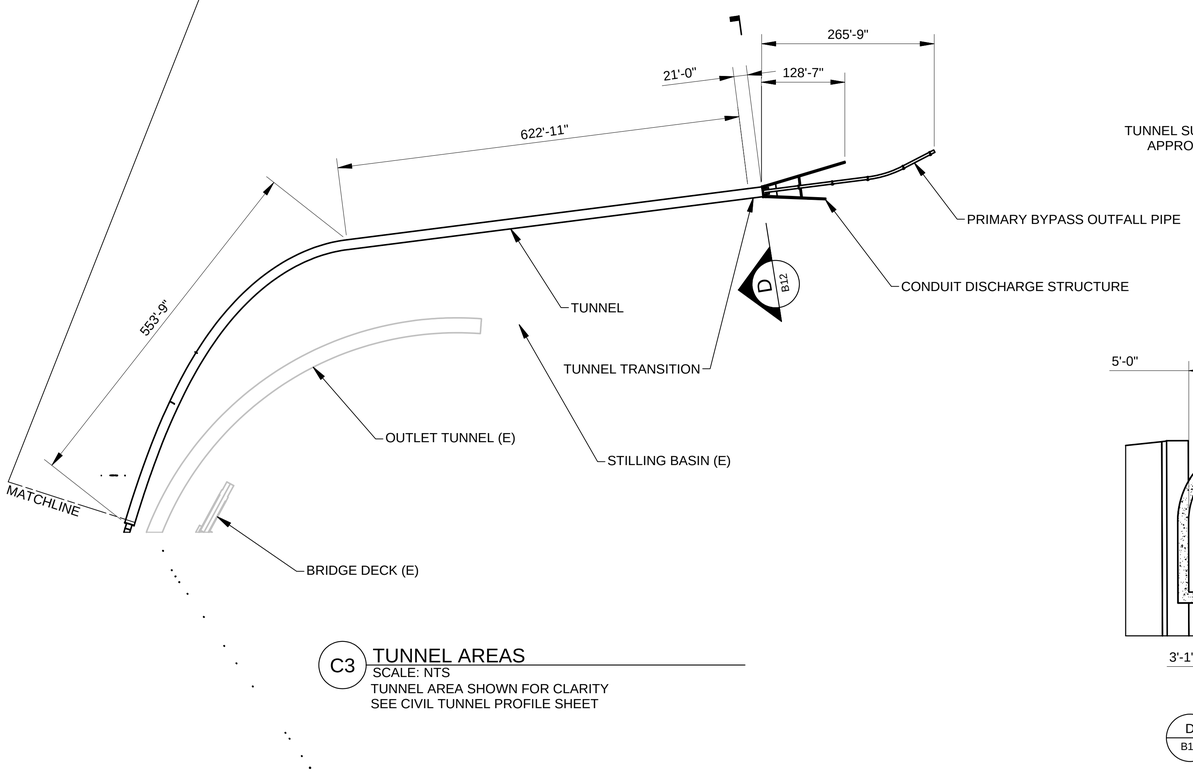

C3 TUNNEL AREAS
SCALE: NTS
TUNNEL AREA SHOWN FOR CLARITY
SEE CIVIL TUNNEL PROFILE SHEET

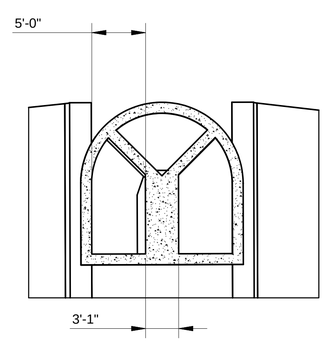

D B12 SECTION
SCALE: NTS

GENERAL NOTES:

1. REFERENCE 95% PLANS FOR COMPLEMENTARY INFORMATION.

2. TOPOGRAPHY AND EXCAVATION NOT SHOWN.

3. COLLECTOR PORT STRUCTURE REUSED FROM 95% DESIGN. NEW DESIGN FEATURES HAVE BEEN INTEGRATED TO ENSURE PORT SHAPE IS UNCHANGED.

4. PORT DISCHARGE IS MODIFIED TO INCLUDE STEEP SLOPE BYPASS GEOMETRIES.

5. TUNNEL CONDUIT WETTED SURFACES MUST MEET REQUIREMENTS FOR HYDRAULIC AND FISH FRIENDLY SURFACES; SEE ENGINEERING APPENDIX.

6. ROCK ANCHOR SYSTEM NOT SHOWN; SEE ENGINEERING APPENDIX.

7. APPROXIMATE MINIMUM DISTANCE SHOWN TO INFORM EXISTING STRUCTURE IMPACTS AND INFLUENCE. SEE ENGINEERING APPENDIX.

8. AREA GIVEN TO CALCULATE CONCRETE VOLUME; 98.193 CUBIC FT OF CONCRETE PER LINEAL FOOT OF TUNNEL.

US Army Corps of Engineers ®

DATE: 24NOV21
SOLICITATION NO:
CONTRACT NO:
DESIGNED BY: BEN FILAN P.E.
DRAWN BY: G2ECOB/JF
CHECKED BY:
SUBMITTED BY: KATHERINE LAPONTE
SIZE: ANSI D

U.S. ARMY CORPS OF ENGINEERS
SEATTLE DISTRICT
4735 EAST MARGINAL WAY SOUTH
SEATTLE, WASHINGTON 98134

U.S. ARMY CORPS OF ENGINEERS
PORTLAND DISTRICT
333 SW 1ST AVE.
PORTLAND, OREGON 97204-3495

FY25 P2-489932 HAHDFPF
HOWARD A. HANSON DAM FISH PASSAGE FACILITY
GREEN RIVER, WASHINGTON

TUNNEL SECTION ADJECTENT TO EXISTING RO

SHEET ID
G-112

DRAFT FEASIBILITY DESIGN

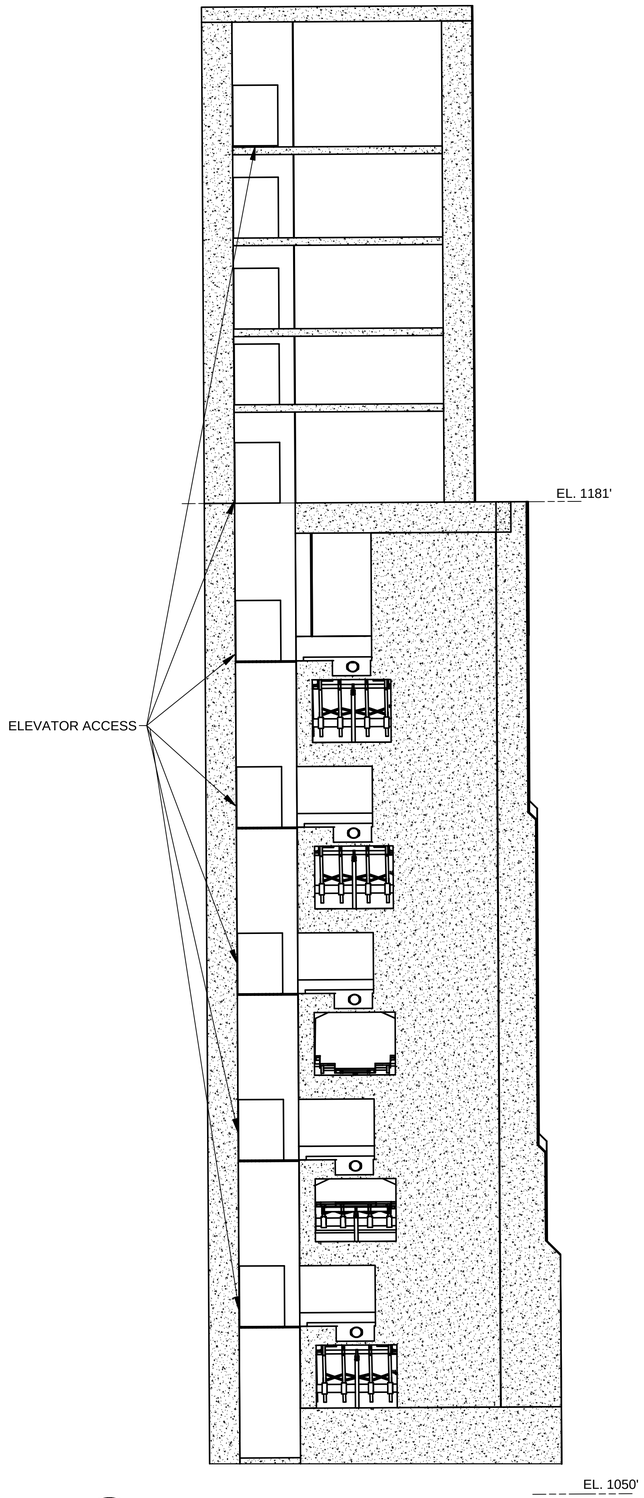

A3 TOWER ELEVATOR ACCESS SECTION VIEW
SCALE: NTS

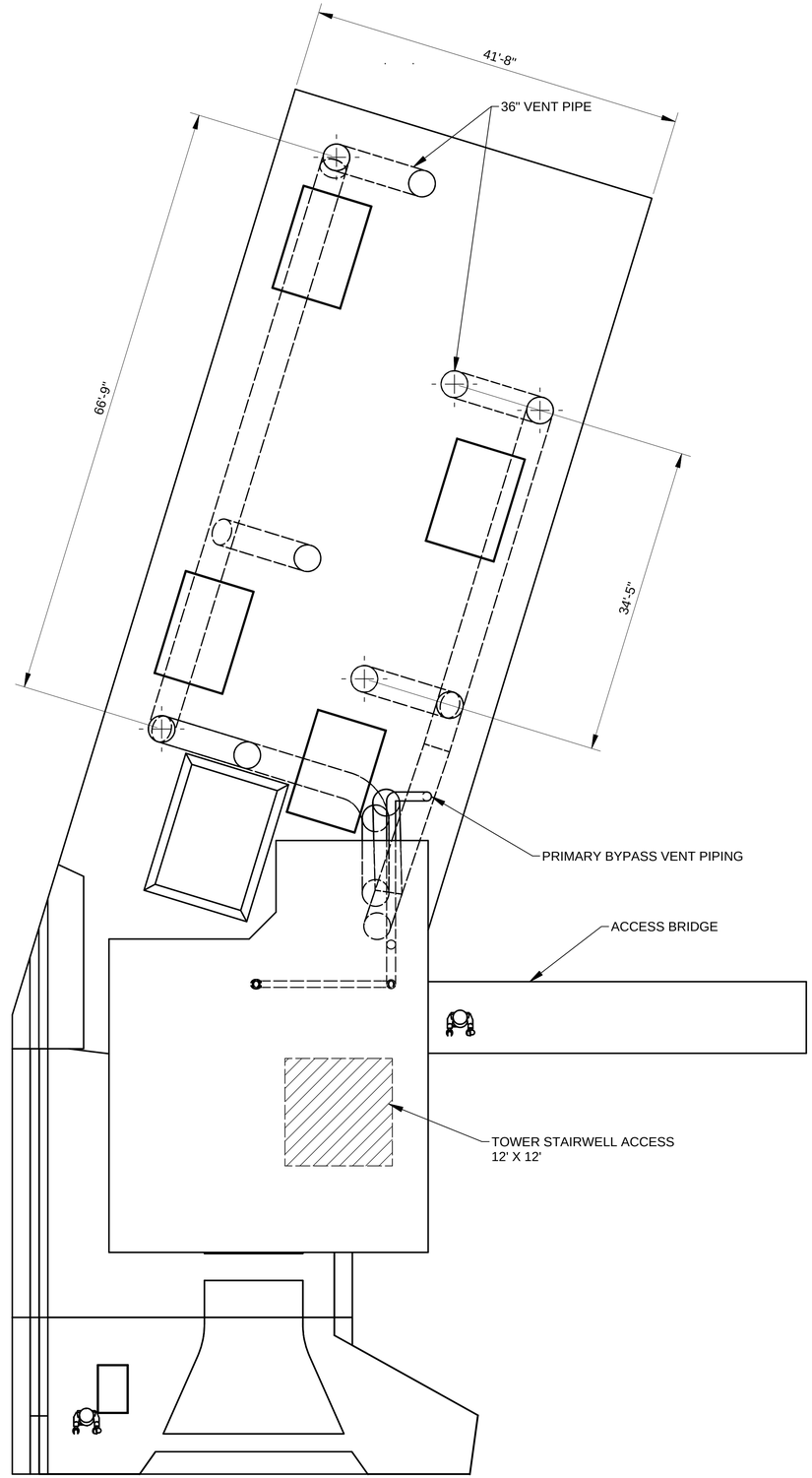

A7 VENT PIPING PLAN VIEW
SCALE: NTS

GENERAL NOTES:

1. REFERENCE 95% PLANS FOR COMPLEMENTARY INFORMATION.
2. TOPOGRAPHY AND EXCAVATION NOT SHOWN.
3. COLLECTOR PORT STRUCTURE REUSED FROM 95% DESIGN. NEW DESIGN FEATURES HAVE BEEN INTEGRATED TO ENSURE PORT SHAPE IS UNCHANGED.
4. PORT DISCHARGE IS MODIFIED TO INCLUDE STEEP SLOPE BYPASS GEOMETRIES.

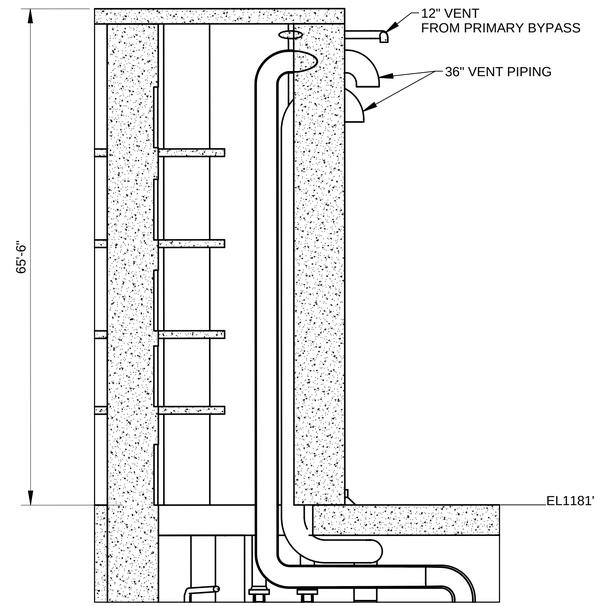

D15 TOWER ELEVATOR ACCESS SECTION VIEW
SCALE: NTS

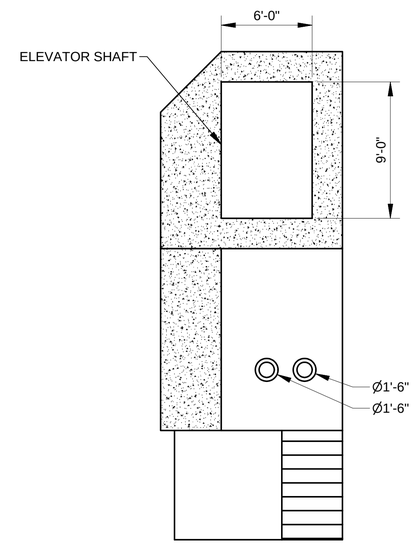

A15 SUMP PLANVIEW
SCALE: NTS

US Army Corps of Engineers ®

DESIGNED BY: ISABEL KALNIN
DATE: 24NOV21
DRAWN BY: CZECDIMK
SOLICITATION NO:
CHECKED BY:
CONTRACT NO:
SUBMITTED BY:
SIZE: ANSI D

U.S. ARMY CORPS OF ENGINEERS
SEATTLE DISTRICT
4735 EAST MARGINAL WAY SOUTH
SEATTLE, WASHINGTON 98134

U.S. ARMY CORPS OF ENGINEERS
PORTLAND DISTRICT
333 SW 1ST AVE.
PORTLAND, OREGON 97204-3495

FY25 P2.498932 HAHDFPF
HOWARD A. HANSON DAM FISH PASSAGE FACILITY
GREEN RIVER, WASHINGTON

TOWER AND ELEVATOR ACCESS

SHEET ID
G-113

DRAFT FEASIBILITY DESIGN

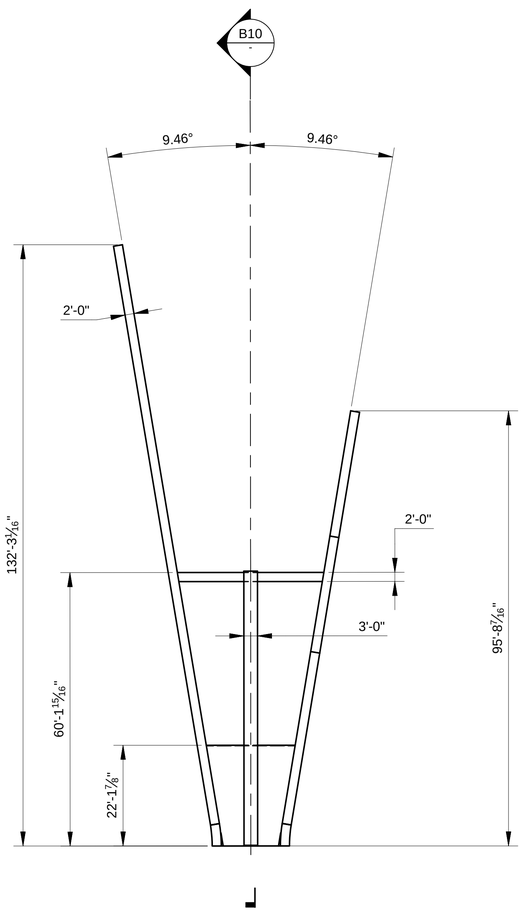

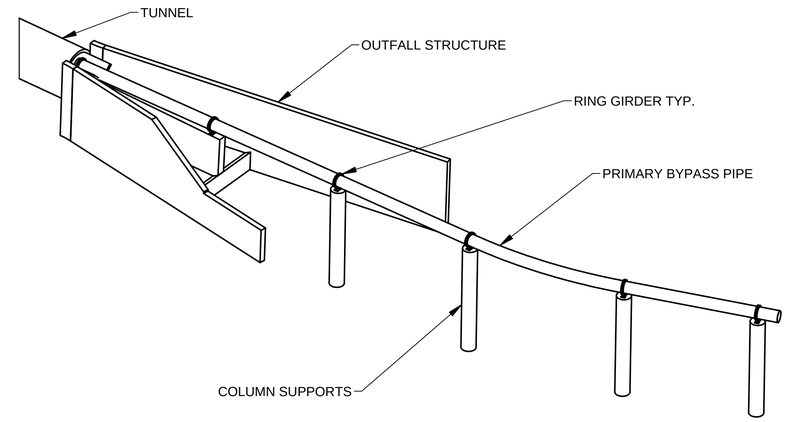

K13 OUTFALL STRUCTURE
SCALE: NTS

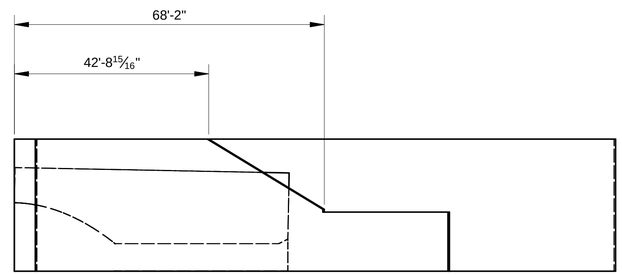

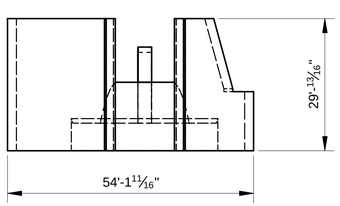

B3 OUTFALL STRUCTURE
SCALE: NTS

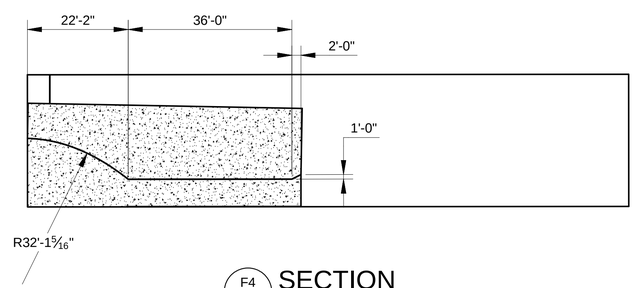

F4 SECTION
SCALE: NTS

GENERAL NOTES:

1. TOPOGRAPHY AND EXCAVATION NOT SHOWN.

2. OUTFALL STRUCTURE VOLUME ESTIMATED AT 24,999 CF.

US Army Corps of Engineers ®

DESIGNED BY: RYAN LAUGHERY
DRAWN BY: GZECDIUF
CHECKED BY:
SUBMITTED BY: KATHERINE LaPONTE
SIZE: ANSI D
DATE: 24NOV21
SOLICITATION NO:
CONTRACT NO:

U.S. ARMY CORPS OF ENGINEERS
SEATTLE DISTRICT
4735 EAST MARGINAL WAY SOUTH
SEATTLE, WASHINGTON 98134

U.S. ARMY CORPS OF ENGINEERS
PORTLAND DISTRICT
333 SW 1ST AVE
PORTLAND, OREGON 97204-3495

FY25 P2-489932 HAHDFRF
HOWARD A. HANSON DAM FISH PASSAGE FACILITY
GREEN RIVER, WASHINGTON

OUTFALL STRUCTURE

SHEET ID

G-114

DRAFT FEASIBILITY DESIGN

A1 STRUCTURE EXCAVATION PLAN

SCALE: 1"=20'

0 20' 40'

US Army Corps of Engineers®

MARK	DESCRIPTION	DATE

DESIGNED BY:	ISSUE DATE: 09 NOVEMBER 2021
DRAWN BY:	SOLICITATION NO.:
CHECKED BY:	CONTRACT NO.:
SUBMITTED BY: KATHERINE LaPONTE	FILE NO.: E-56-14-22
SIZE:	

U.S. ARMY CORPS OF ENGINEERS

SEATTLE DISTRICT
SEATTLE, WASHINGTON

FY25 P2-488932-HAHDFPF
HOWARD A HANSON DAM FISH PASSAGE FACILITY
GREEN RIVER, WASHINGTON

STRUCTURE EXCAVATION PLAN

SHEET ID
G-115

DRAFT FEASIBILITY DESIGN

FILE PATH: pw://PWINT-WPC.EIS.DS.USACE.ARMY.MIL:CENWS - Seattle District/Documents/Civil Works/Howard Hanson Dam, WA/FY25_P2-488932_HAHDFPF/Plan Sets/03_Sheets/Civil/Structure Excavation Plan.dgn
PLOT DATE: 11:04:28 AM 11/16/2021

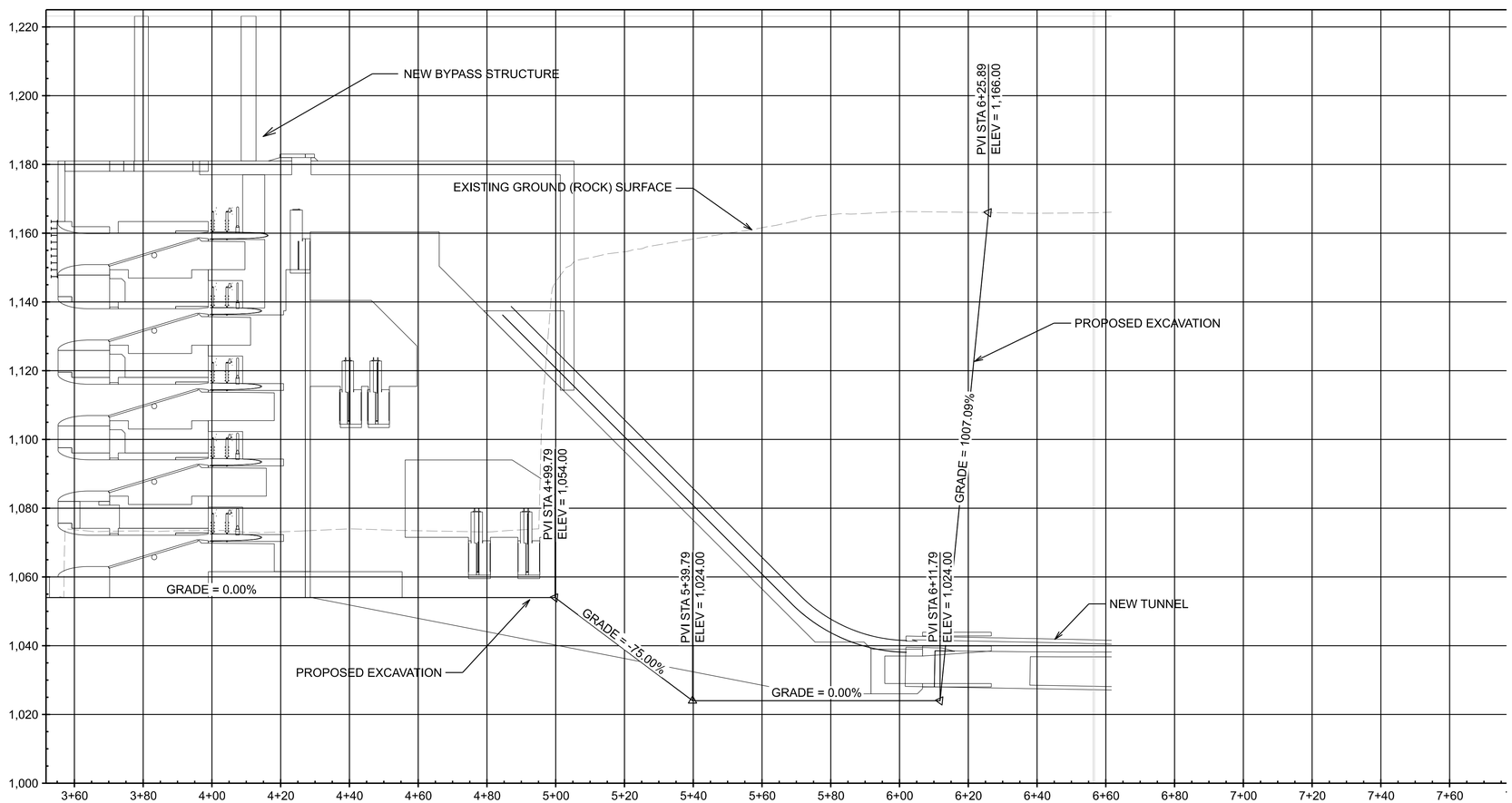

A1 STRUCTURAL EXCAVATION PROFILE

SCALE: 1"=20'

HORIZONTAL: 0 20' 40' VERTICAL: 0 20' 40'

US Army Corps of Engineers®

MARK	DESCRIPTION	DATE

DESIGNED BY:
DRAWN BY:
CHECKED BY:
SUBMITTED BY: KATHERINE LaPONTE
SIZE:
ISSUE DATE: 09 NOVEMBER 2021
SOLICITATION NO.:
CONTRACT NO.:
FILE NO.: E-36-14-22

U.S. ARMY CORPS OF ENGINEERS
SEATTLE DISTRICT
SEATTLE, WASHINGTON

FY25 P2-488932-HAHDFPF
HOWARD A HANSON DAM FISH PASSAGE FACILITY
GREEN RIVER, WASHINGTON

STRUCTURAL EXCAVATION PROFILE

SHEET ID
G-116

DRAFT FEASIBILITY DESIGN

FILE PATH: pw://PWINT-WPC.EIS.DS.USACE.ARMY.MIL:CENWS - Seattle District/Documents/Civil Works/Howard Hanson Dam, WA/FY25_P2-488932_HAHDFPF/Plan Sets/03_Sheets/Civil/Structure Excavation Profile.dgn
PLOT DATE: 5:45:01 PM 11/29/2021

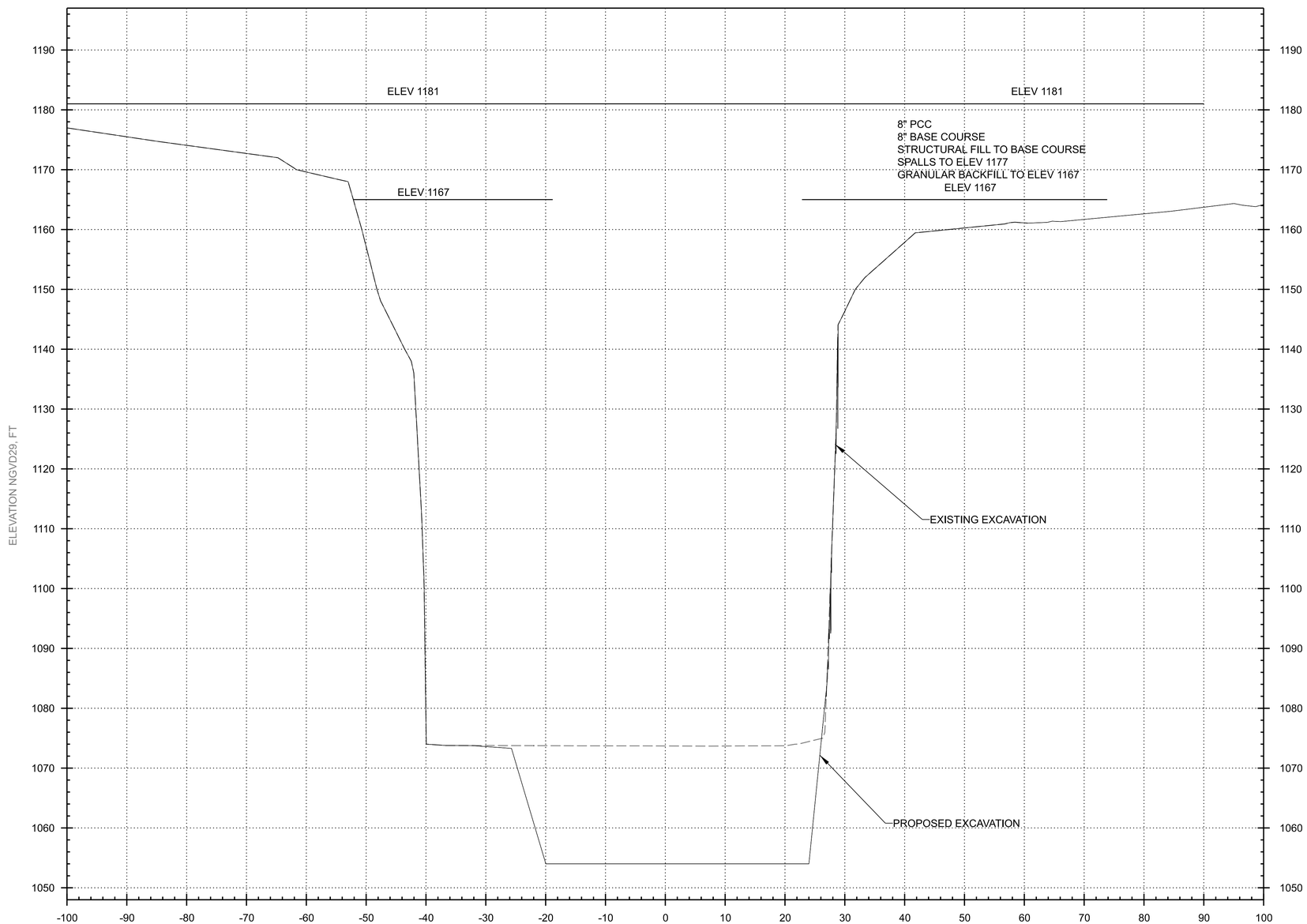

A1 CROSS SECTION 4+50

SCALE: 1"=10'

HORIZONTAL: 0 10' 20'

VERTICAL: 0 10' 20'

US Army Corps of Engineers®

MARK	DESCRIPTION	DATE

DESIGNED BY:
DRAWN BY:
CHECKED BY:
SUBMITTED BY: KATHERINE LaPONTE
SIZE:
ISSUE DATE: 09 NOVEMBER 2021
SOLICITATION NO.:
CONTRACT NO.:
FILE NO.: E-86-14-22

U.S. ARMY CORPS OF ENGINEERS
SEATTLE DISTRICT
SEATTLE, WASHINGTON

FY25 P2-488932-HAHDFPF
HOWARD A HANSON DAM FISH PASSAGE FACILITY
GREEN RIVER, WASHINGTON

STRUCTURE EXCAVATION
SECTION 4+50

SHEET ID
G-117

DRAFT FEASIBILITY DESIGN

FILE PATH: pw://PWINT-WPC.EIS.DS.USACE.ARMY.MIL:CENWS - Seattle District/Documents/Civil Works/Howard Hanson Dam, WA/FY25_P2-488932_HAHDFPF/Plan Sets/03_Sheets/Civil/Structure Excavation 4+50.dgn
PLOT DATE: 7:15:54 AM 11/23/2021

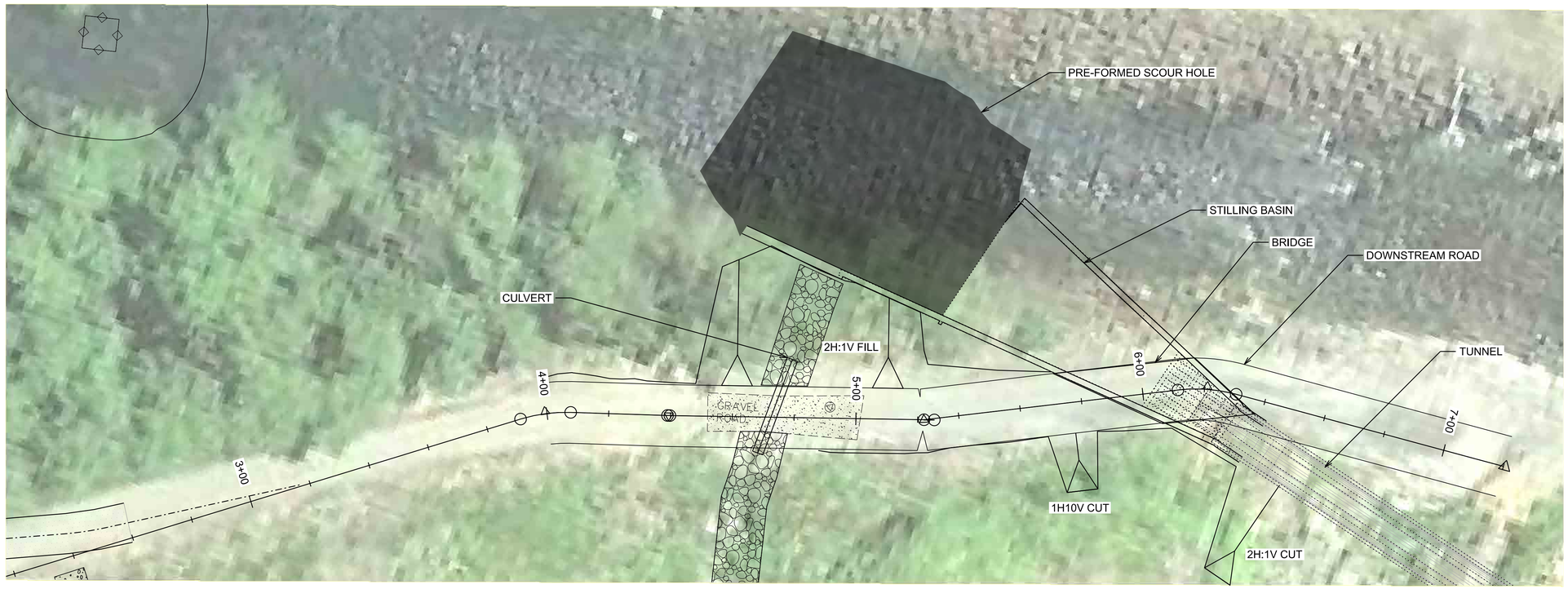

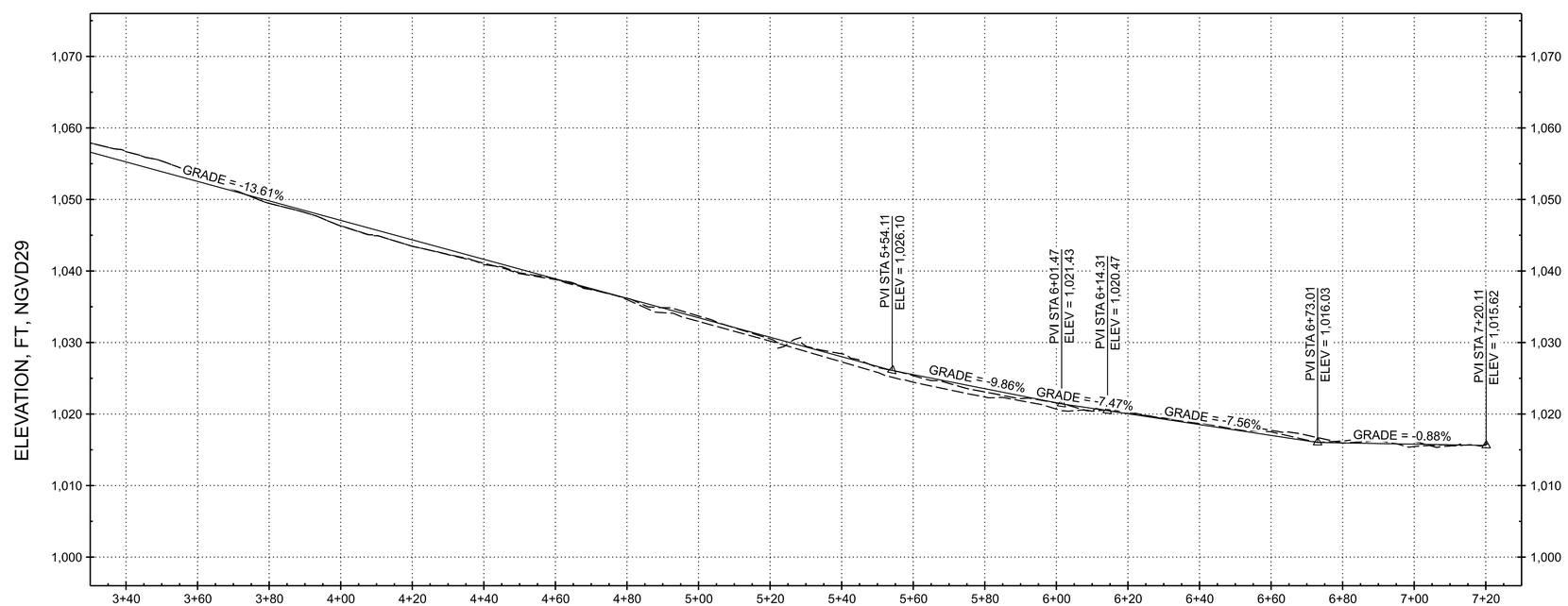

1 DOWNSTREAM ROAD - PLAN AND PROFILE

SCALE: 1"=20'

0 20' 40'

US Army Corps of Engineers®

MARK	DESCRIPTION	DATE

DESIGNED BY:
DRAWN BY:
CHECKED BY:
SUBMITTED BY: KATHERINE LaPONTE
SIZE:
ISSUE DATE: 09 NOVEMBER 2021
SOLICITATION NO.:
CONTRACT NO.:
FILE NO.: E-36-14-22

U.S. ARMY CORPS OF ENGINEERS
SEATTLE DISTRICT
SEATTLE, WASHINGTON

FY25 P2-488932-HAHDFPF
HOWARD A HANSON DAM FISH PASSAGE FACILITY
GREEN RIVER, WASHINGTON

DOWNSTREAM ROAD
PLAND AND PROFILE

SHEET ID
G-118

DRAFT FEASIBILITY DESIGN

FILE PATH: pw://PWINT-WPC.EIS.DS.USACE.ARMY.MIL:CENWS - Seattle District/Documents/Civil Works/Howard Hanson Dam, WA/FY25_P2-488932_HAHDFPF/Plan Sets/03_Sheets/Civil/Downstream Road - Plan and Profile.dgn
PLOT DATE: 8:52:19 AM 11/30/2021

2 DOWNSTREAM CHANNEL PLAN

SCALE: 1"=30'

0 30' 60'

US Army Corps of Engineers®

MARK	DESCRIPTION	DATE

ISSUE DATE: 09 NOVEMBER 2021
SOLICITATION NO.:
CONTRACT NO.:
FILE NO.: E-36-14-22

DESIGNED BY: KATO
DRAWN BY: KATO
CHECKED BY: PEELE
SUBMITTED BY: KATHERINE LaPONTE
SIZE: ANSI D

U.S. ARMY CORPS OF ENGINEERS
SEATTLE DISTRICT
SEATTLE, WASHINGTON

FY25 P2-488932-HAHDFPF
HOWARD A HANSON DAM FISH PASSAGE FACILITY
GREEN RIVER, WASHINGTON

DOWNSTREAM CHANNEL PLAN

SHEET ID
G-119

DRAFT FEASIBILITY DESIGN

FILE PATH: pw://PWINT-WPC.EIS.DS.USACE.ARMY.MIL:CENWS - Seattle District/Documents/Civil Works/Howard Hanson Dam, WA/FY25_P2-488932_HAHDFPF/Plan Sets/03_Sheets/Civil/C-122 DOWNSTREAM CHANNEL PLAN
PLOT DATE: 9:14:03 AM 3/11/2022

H1 TUNNEL ALIGNMENT PLAN

SCALE: 1"=80'

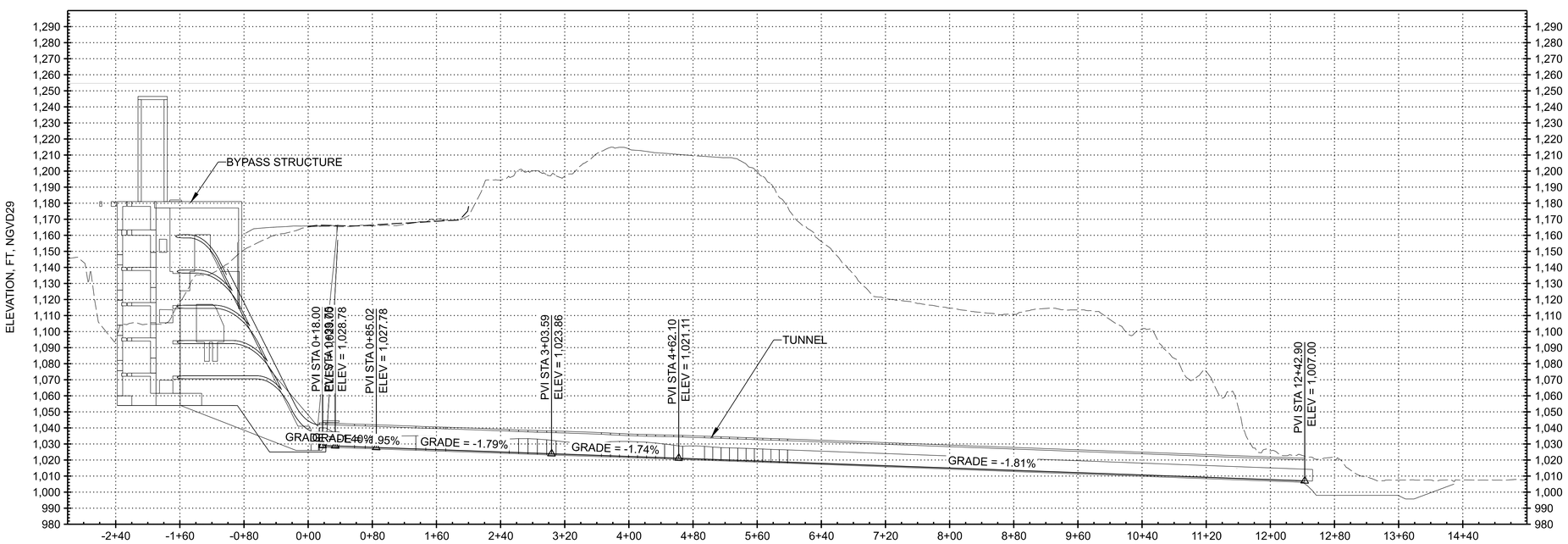

A1 TUNNEL ALIGNMENT PROFILE

SCALE: 1"=80'

US Army Corps of Engineers®

MARK	DESCRIPTION	DATE

DESIGNED BY:
DRAWN BY:
CHECKED BY:
SUBMITTED BY: KATHERINE LaPONTE
SIZE:
ISSUE DATE: 09 NOVEMBER 2021
SOLICITATION NO.:
CONTRACT NO.:
FILE NO.: E-36-14-22

U.S. ARMY CORPS OF ENGINEERS
SEATTLE DISTRICT
SEATTLE, WASHINGTON

FY25 P2-488932-HAHDFPF
HOWARD A HANSON DAM FISH PASSAGE FACILITY
GREEN RIVER, WASHINGTON

TUNNEL PLAN AND PROFILE

SHEET ID
G-120

DRAFT FEASIBILITY DESIGN

pw://PWINT-WPC.EIS.DS.USACE.ARMY.MIL:CENWS - Seattle District/Documents/Civil Works/Howard Hanson Dam, WA/FY25_P2-488932_HAHDFPF/Plan Sets/01_Models/Civil/ORD Files/HAHDFPF-C-DM-SITE_NAD27_Tunnel_Alignment.dgn
9:28:25 AM 3/11/2022
PD: AEC_pdf.pltcfg; NWS_AEC_Screen_FullSize.dscript

FILE PATH: pw://PWINT-WPC.EIS.DS.USACE.ARMY.MIL:CENWS - Seattle District/Documents/Civil Works/Howard Hanson Dam, WA/FY25_P2-488932_HAHDFPF/Plan Sets/01_Models/Civil/ORD Files/HAHDFPF-C-DM-SITE_NAD27_Tunnel_Alignment.dgn
PLOT DATE: 9:28:25 AM 3/11/2022